US00D509795S

(12) United States Design Patent

Buck

(10) Patent No.: US D509,795 S
(45) Date of Patent: ** Sep. 20, 2005

(54) **PORTABLE ELECTRIC GENERATOR**

(75) Inventor: **John E. Buck**, Cockeysville, MD (US)

(73) Assignee: **Black & Decker Inc.**, Newark, DE (US)

(**) Term: **14 Years**

(21) Appl. No.: **29/209,823**

(22) Filed: **Jul. 22, 2004**

Related U.S. Application Data

(62) Division of application No. 29/148,238, filed on Sep. 17, 2001, now Pat. No. Des. 501,182.

(51) **LOC (8) Cl.** **13-01**
(52) **U.S. Cl.** **D13/116**
(58) **Field of Search** D13/112, 113, D13/114, 116, 199; 123/2–3; 307/150

(56) **References Cited**

U.S. PATENT DOCUMENTS

D135,939 S		7/1943	Worthley	
D138,383 S	*	7/1944	Whitesell et al.	D13/110
D194,490 S		1/1963	Winslow	D77/1
D205,975 S		10/1966	Sato	D77/1
D210,937 S		5/1968	Clark	D14/3

(Continued)

FOREIGN PATENT DOCUMENTS

DE	M8803611	2/1990	D13/1
DE	M9208688	5/1993	D13/1

(Continued)

Primary Examiner—Stella Reid
Assistant Examiner—Daniel Bui
(74) *Attorney, Agent, or Firm*—Michael P. Leary; Charles E. Yocum; Adan Ayala

(57) **CLAIM**

The ornamental design for a portable electric generator, as shown and described.

DESCRIPTION

FIG. **1** is a front perspective view of a first embodiment of a portable electric generator showing my new design;
FIG. **2** is a right side elevational view of the portable electric generator of FIG. **1**.
FIG. **3** is a left elevational view of the portable electric generator of FIG. **1**.
FIG. **4** is a rear elevational view of the portable electric generator of FIG. **1**.
FIG. **5** is a front elevational view of the portable electric generator of FIG. **1**.
FIG. **6** is a top plan view of the portable electric generator of FIG. **1**.
FIG. **7** is a bottom plan view of the portable electric generator of FIG. **1**.
FIG. **8** is a rear perspective view of a second embodiment of a portable electric generator showing my new design.
FIG. **9** is a right side elevational view of the portable electric generator of FIG. **8**.
FIG. **10** is a left side elevational view of the portable electric generator of FIG. **8**.
FIG. **11** is a rear elevational view of the portable electric generator of FIG. **8**.
FIG. **12** is a front elevational view of the portable electric generator of FIG. **8**.
FIG. **13** is a top plan view of the portable electric generator of FIG. **8**; and,
FIG. **14** is a bottom plan view of the portable electric generator of FIG. **8**.
The broken lines and the areas within the broken lines are for illustrative purposes only and form no part of the claimed design.

1 Claim, 14 Drawing Sheets

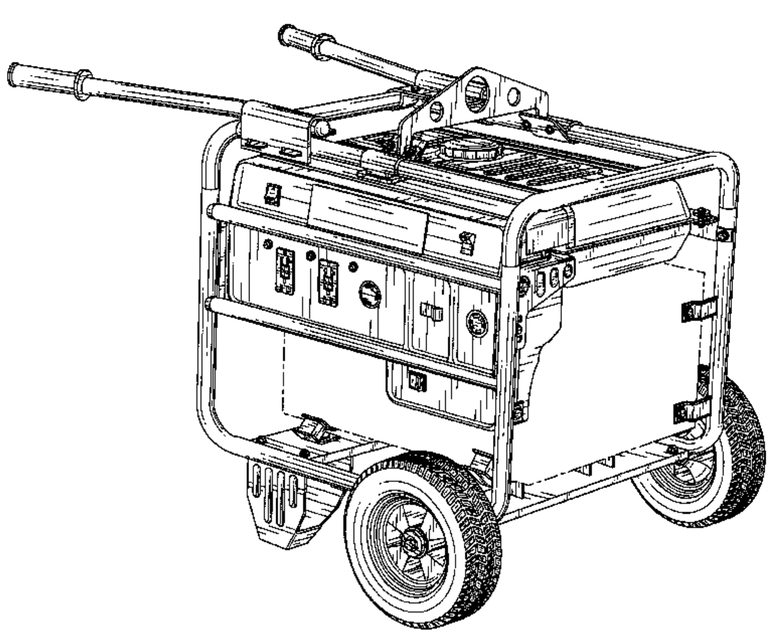

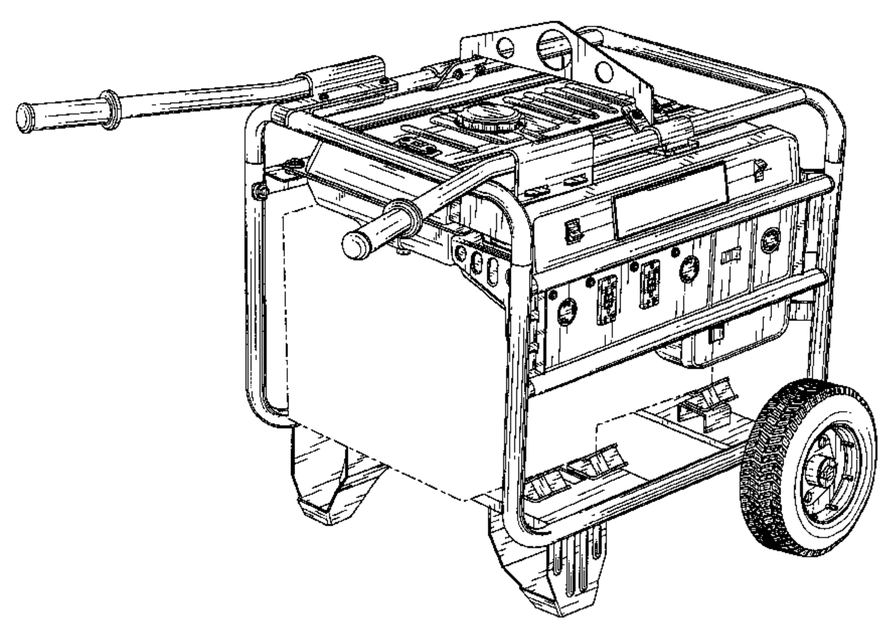

U.S. PATENT DOCUMENTS

D227,411	S		6/1973	De Bella	D13/1
D249,788	S		10/1978	Nanjo	D13/3
4,376,250	A		3/1983	Baker, Jr. et al.	307/150
D276,997	S	*	1/1985	Mikado	D13/116
D277,285	S		1/1985	Lopez	D15/1
D277,954	S		3/1985	Mizushima	D13/1
D278,425	S	*	4/1985	Toshihiko	D13/116
D282,734	S		2/1986	Shibuya	D13/1
D293,904	S		1/1988	Murakami et al.	D13/1
D294,015	S		2/1988	Gomi	D13/1
4,914,373	A		4/1990	Rivkine	322/1
D382,853	S	*	8/1997	Crawford	D13/112
D416,537	S		11/1999	Imai et al.	D13/116
D416,858	S		11/1999	Domanski	D13/114
D418,809	S	*	1/2000	Frank	D13/112
D425,018	S		5/2000	Madura et al.	D13/110
6,181,019	B1		1/2001	Frank	290/1 A
D489,327	S	*	5/2004	Imai	D13/116
6,750,556	B2	*	6/2004	Sodemann et al.	290/1 A
D494,929	S	*	8/2004	Imai	D13/116

FOREIGN PATENT DOCUMENTS

DE	M9301671	9/1993	D13/1
DE	M9301672	9/1993	D13/1
DE	M9805666	2/1999	D13/1
DE	49901937	7/1999	D13/1
DE	49906955	12/1999	D13/1
DE	40001334	6/2000	D13/1
DE	40003903	9/2000	D13/1

* cited by examiner

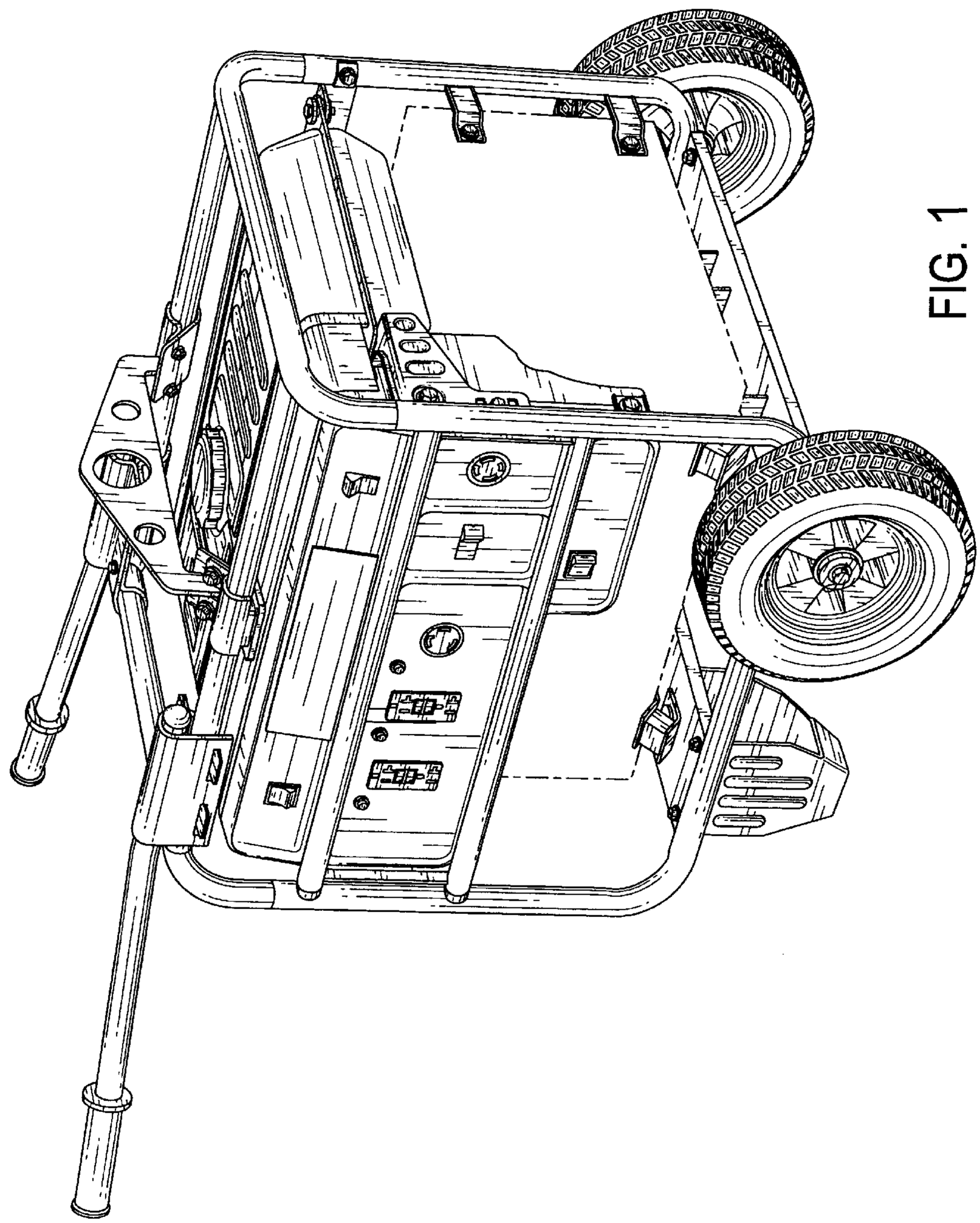

FIG. 1

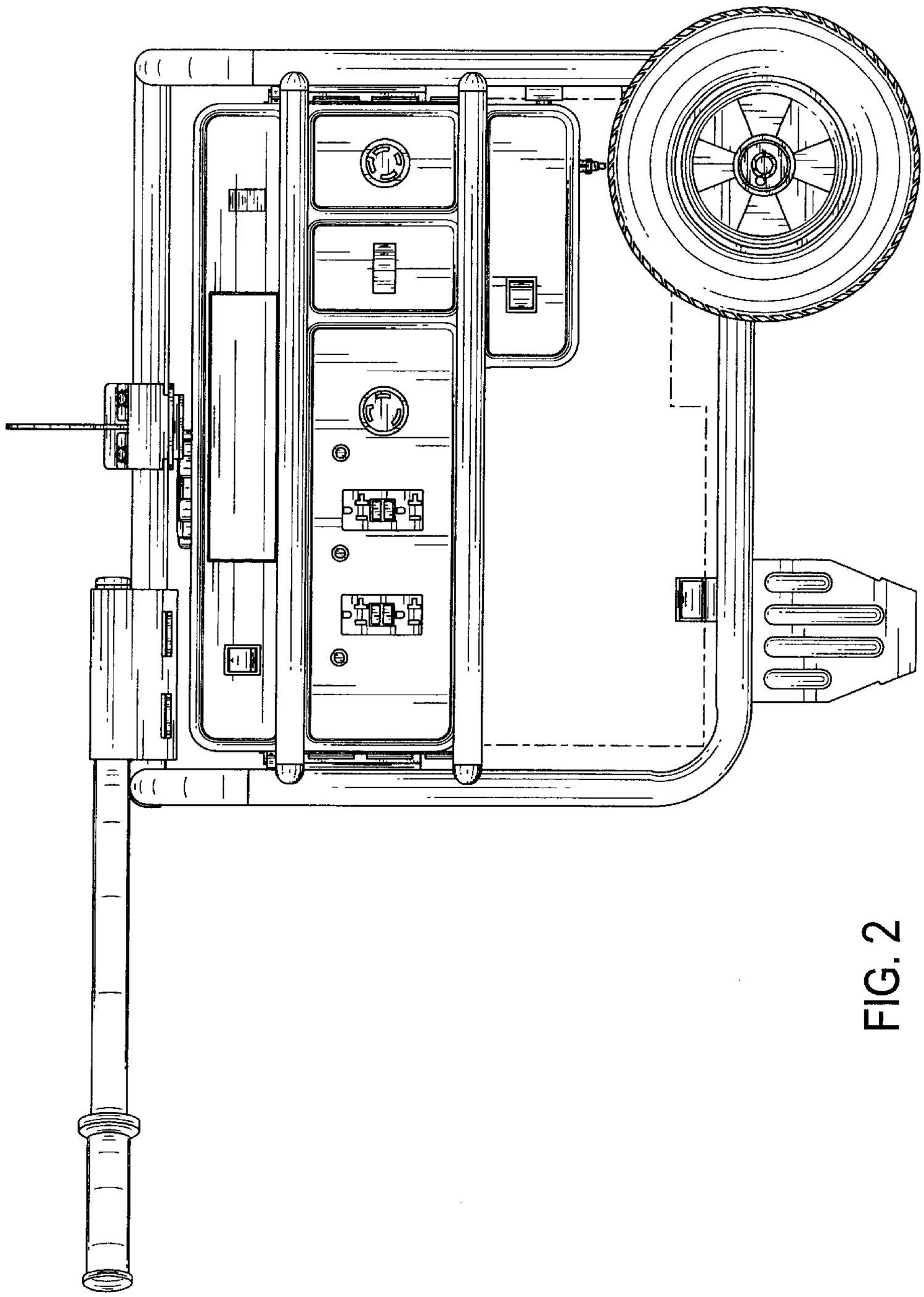

FIG. 2

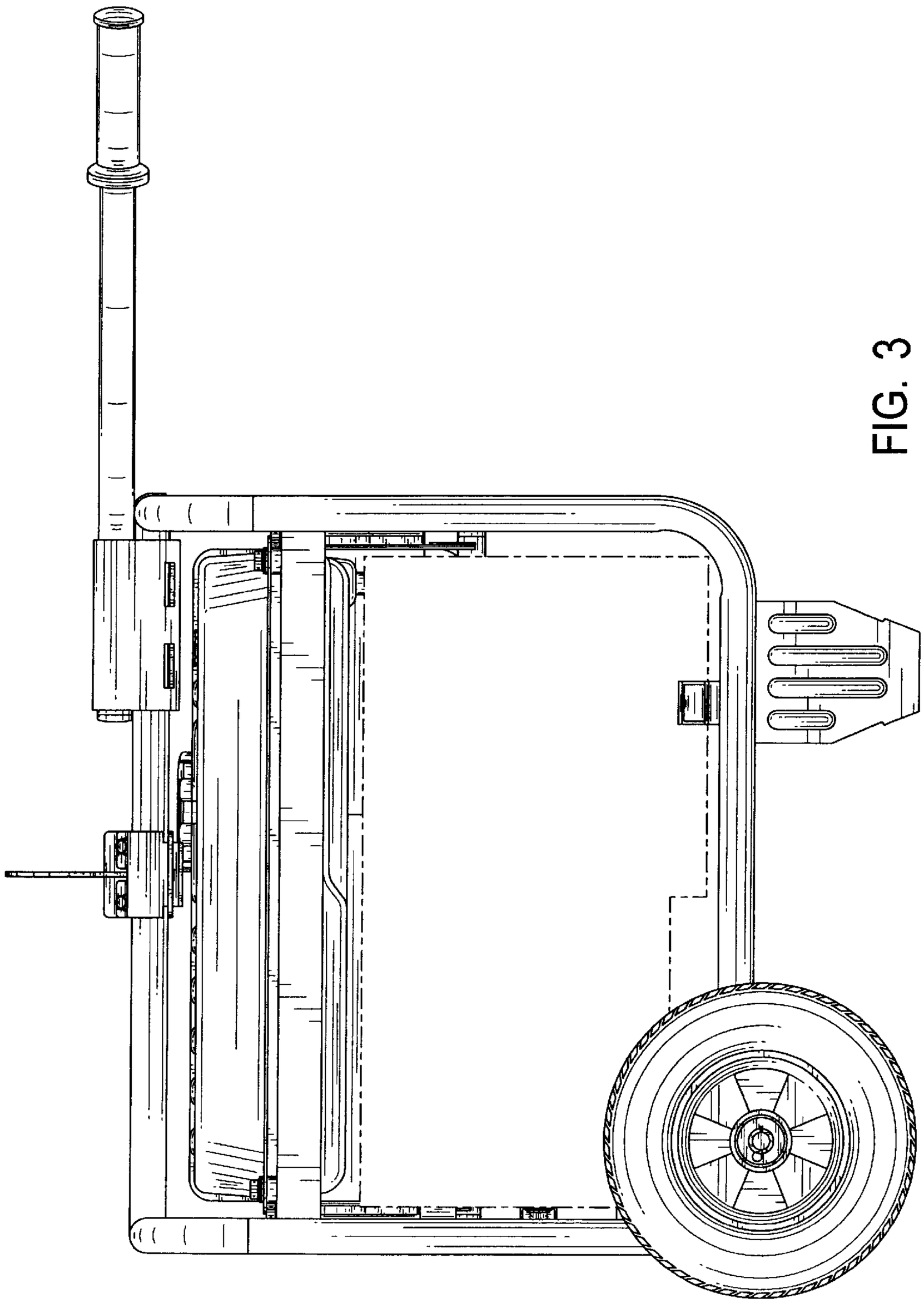

FIG. 3

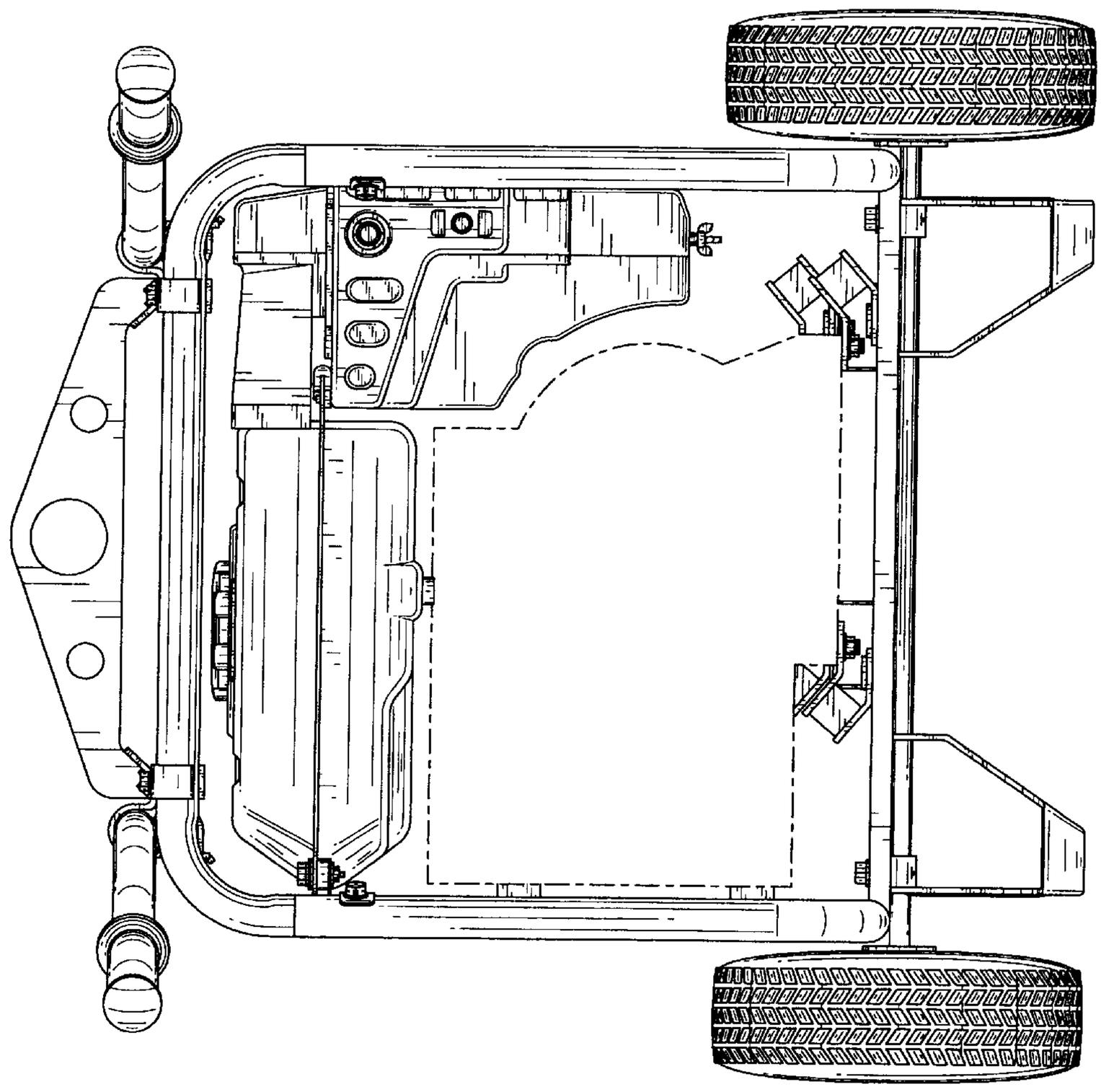

FIG. 4

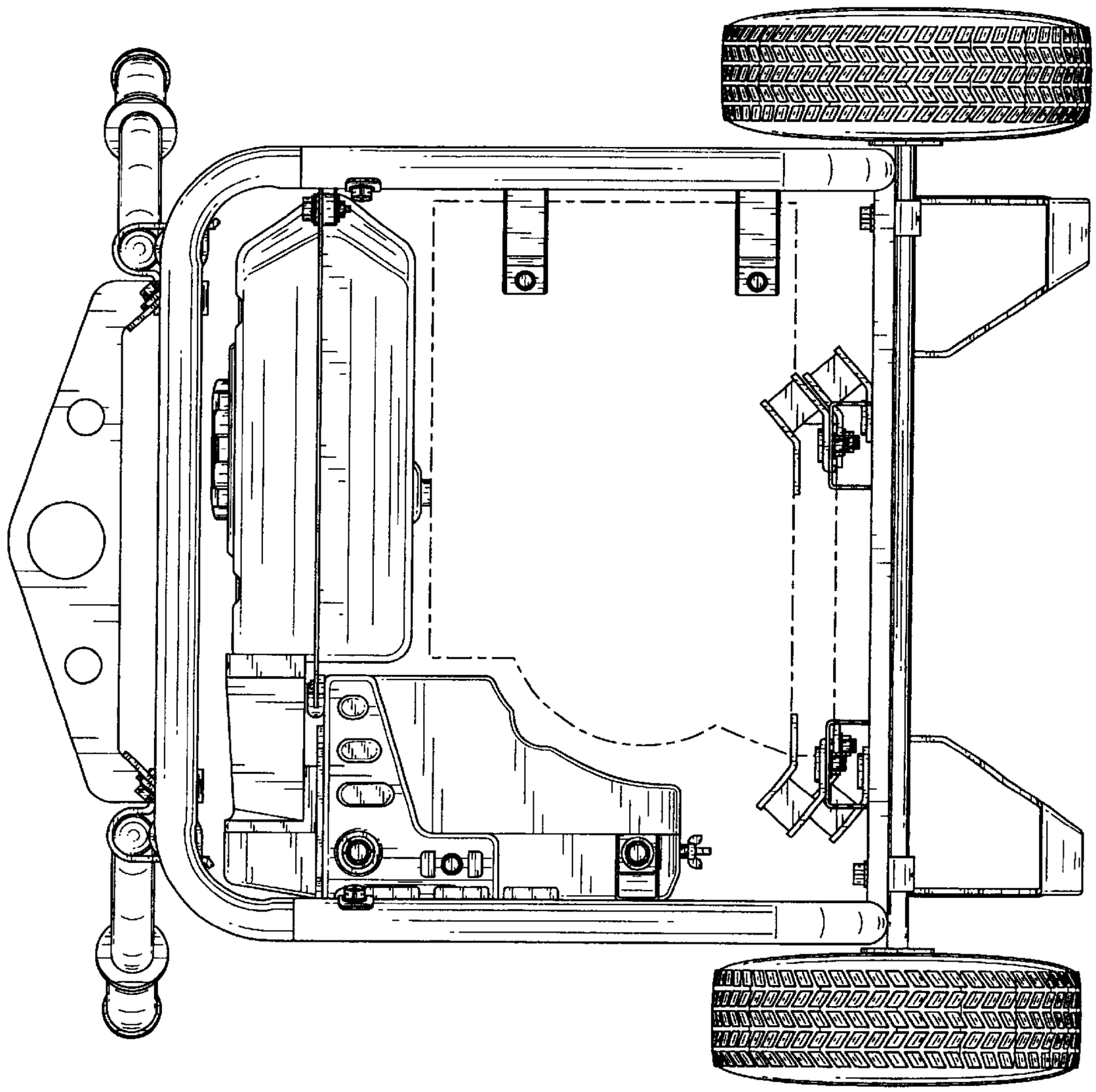

FIG. 5

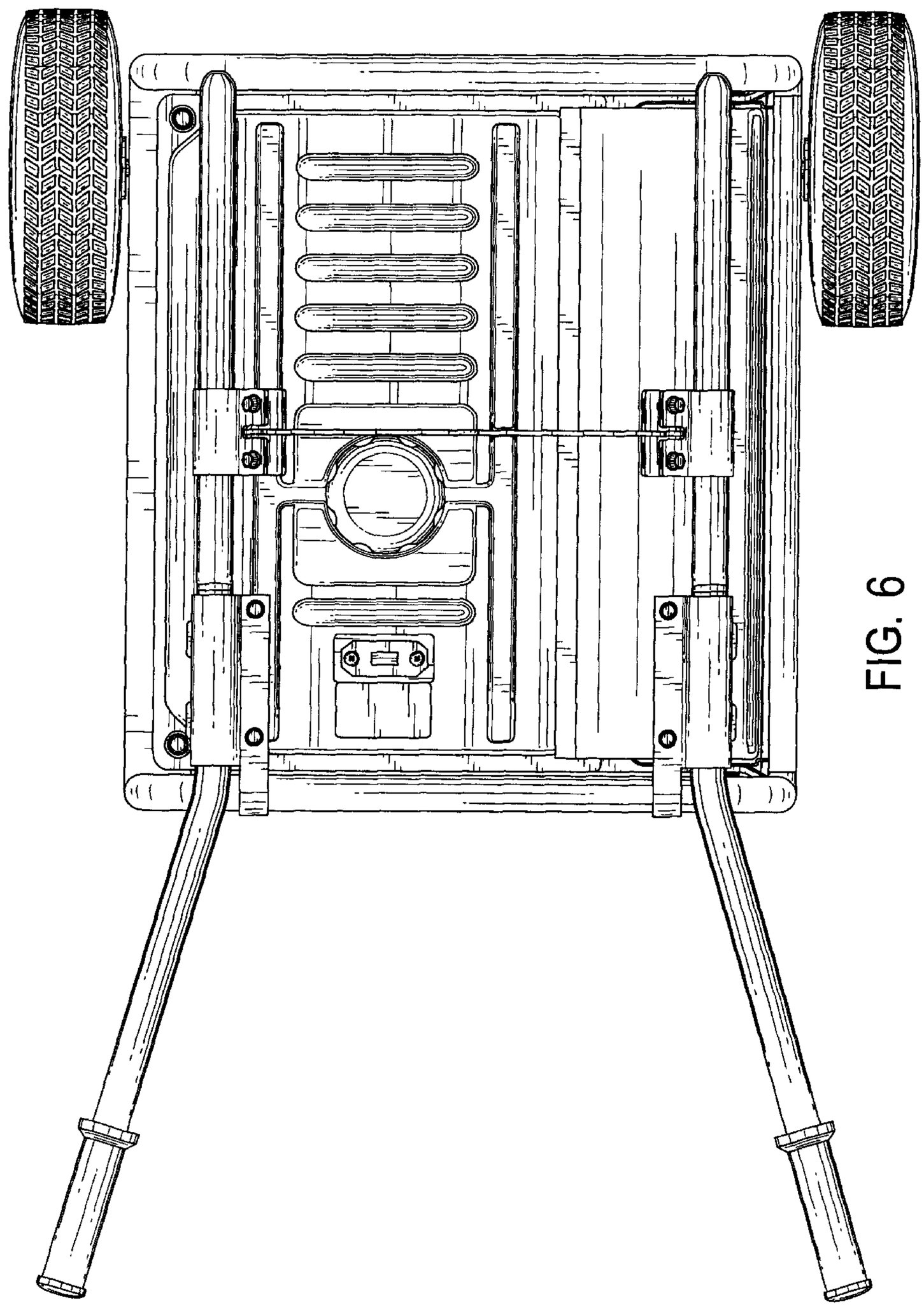

FIG. 6

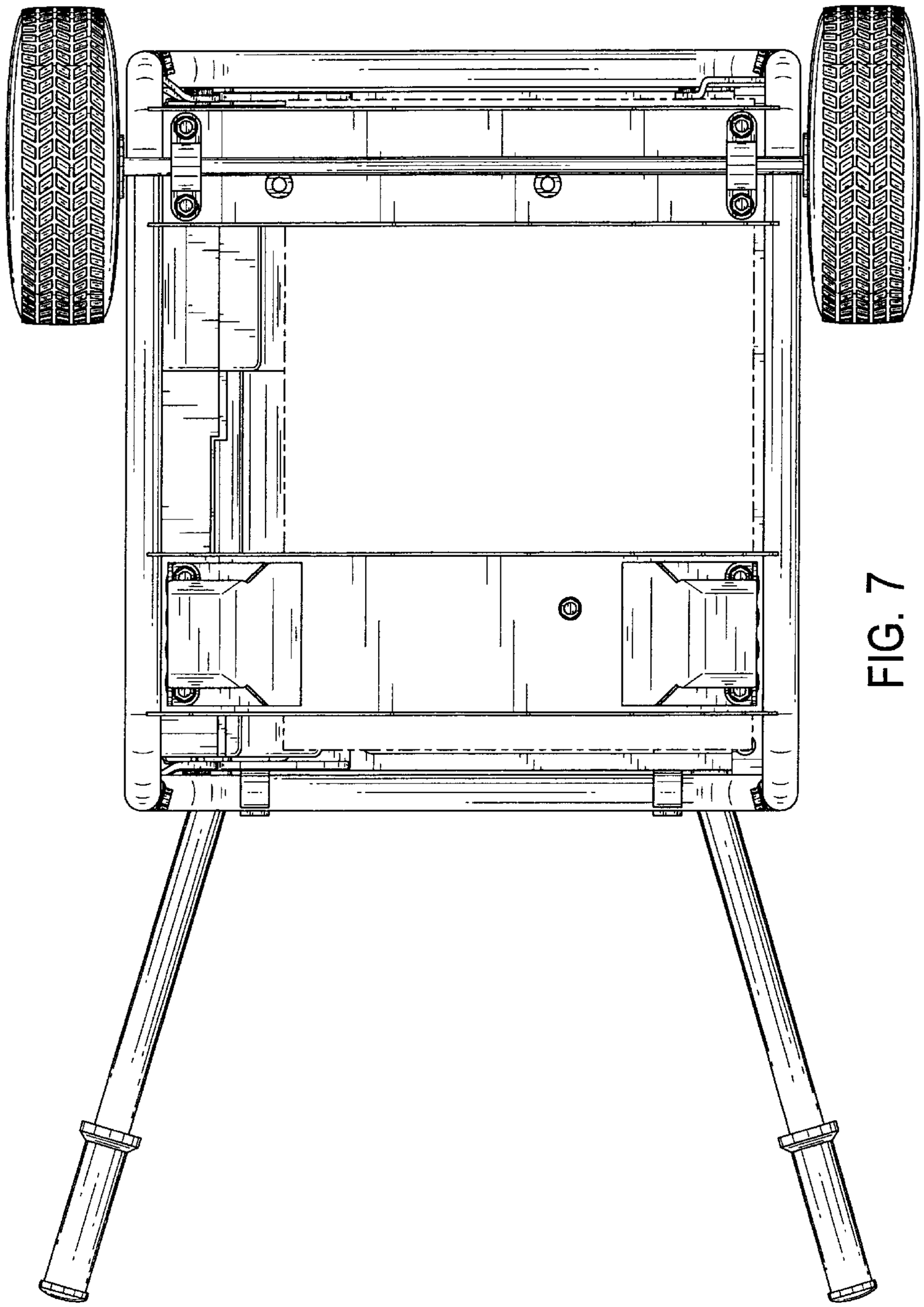

FIG. 7

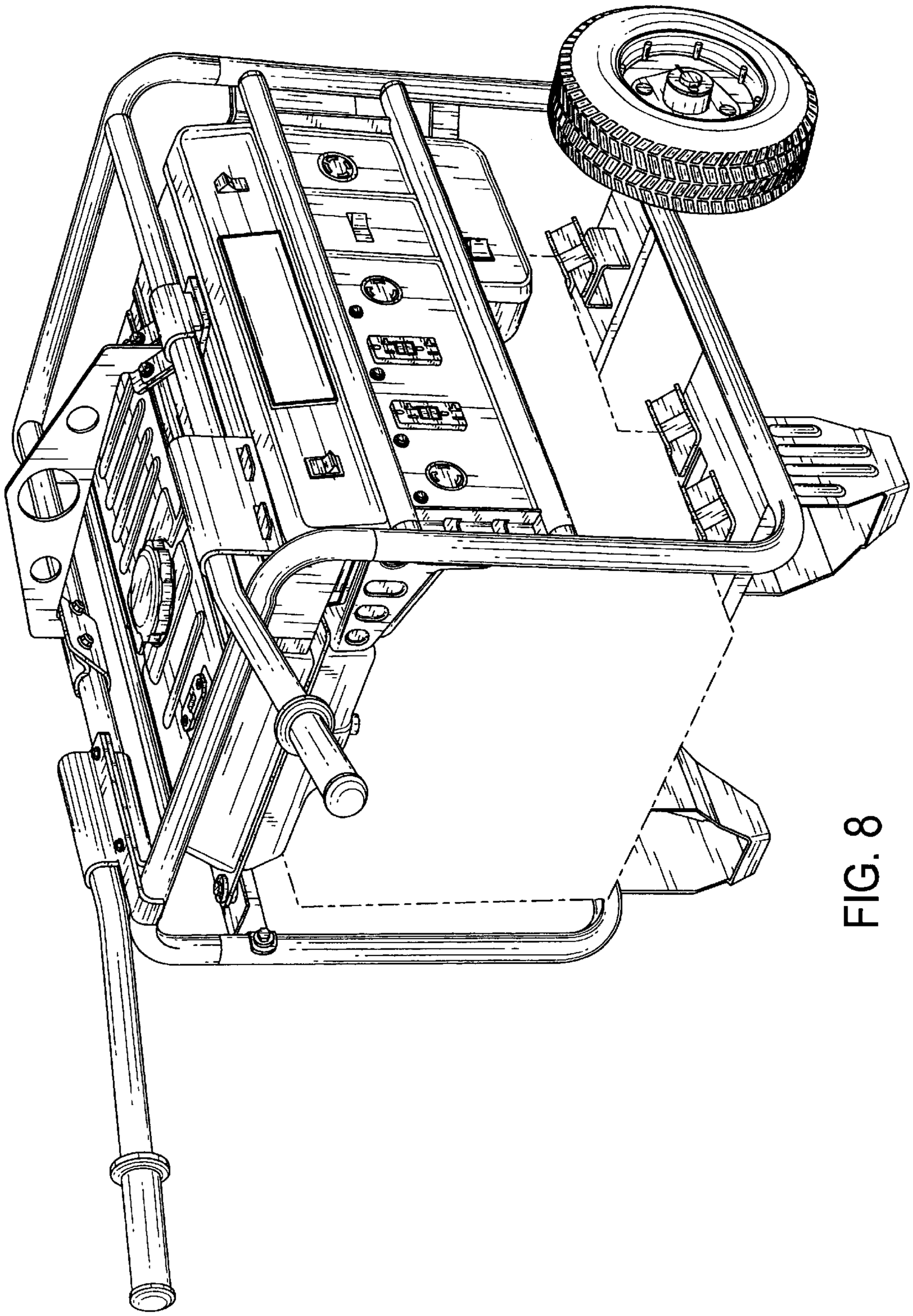

FIG. 8

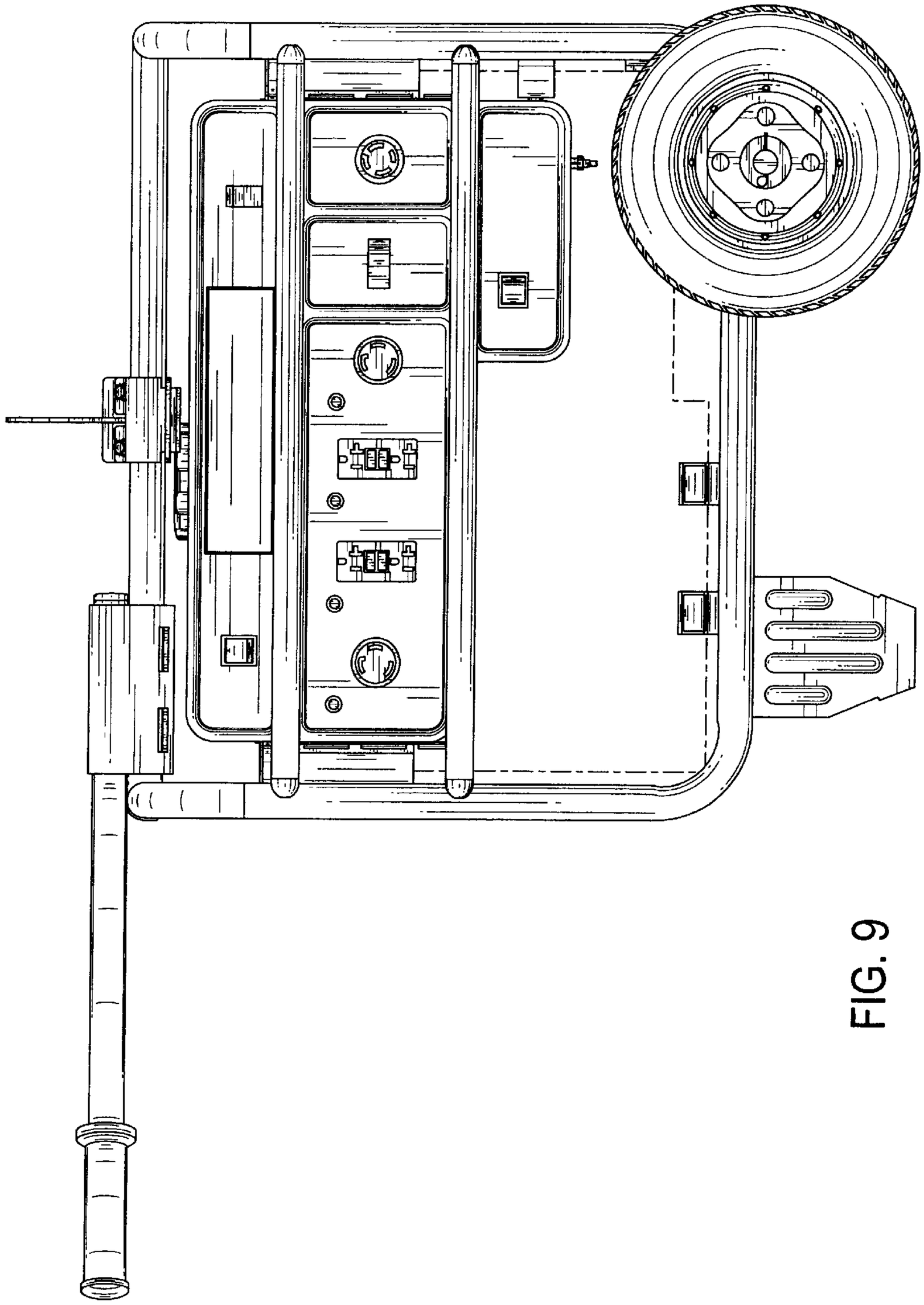

FIG. 9

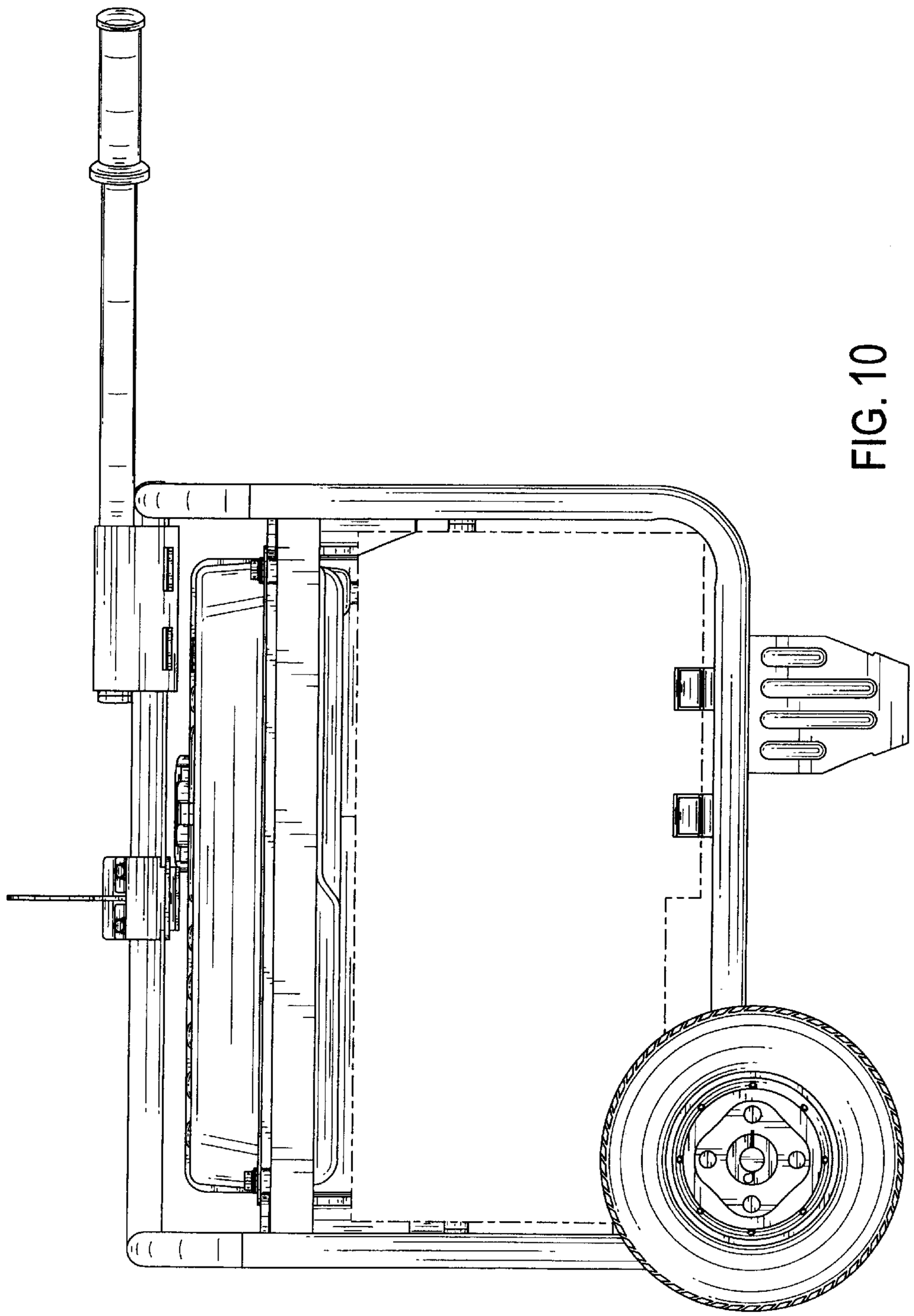

FIG. 10

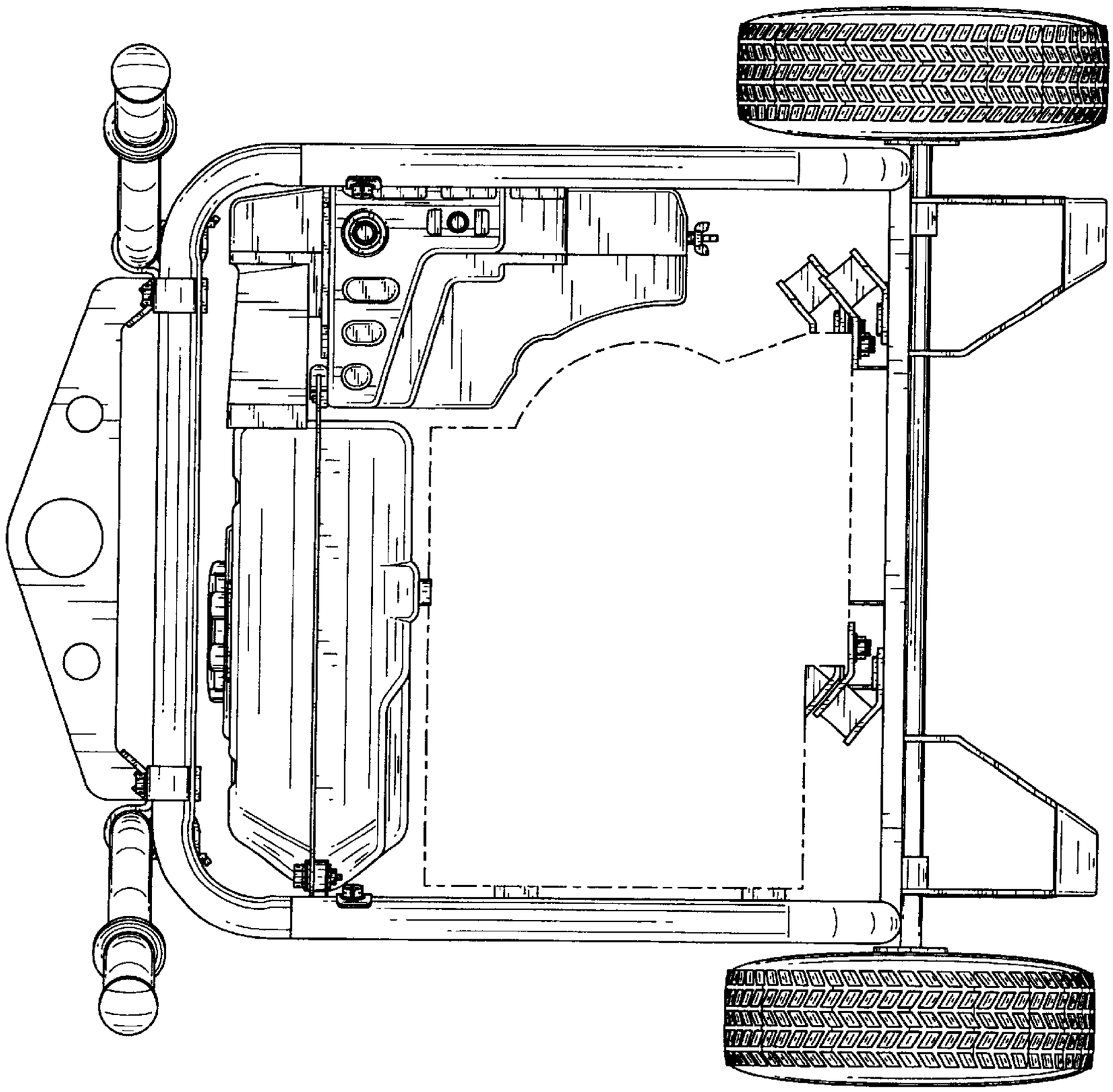

FIG. 11

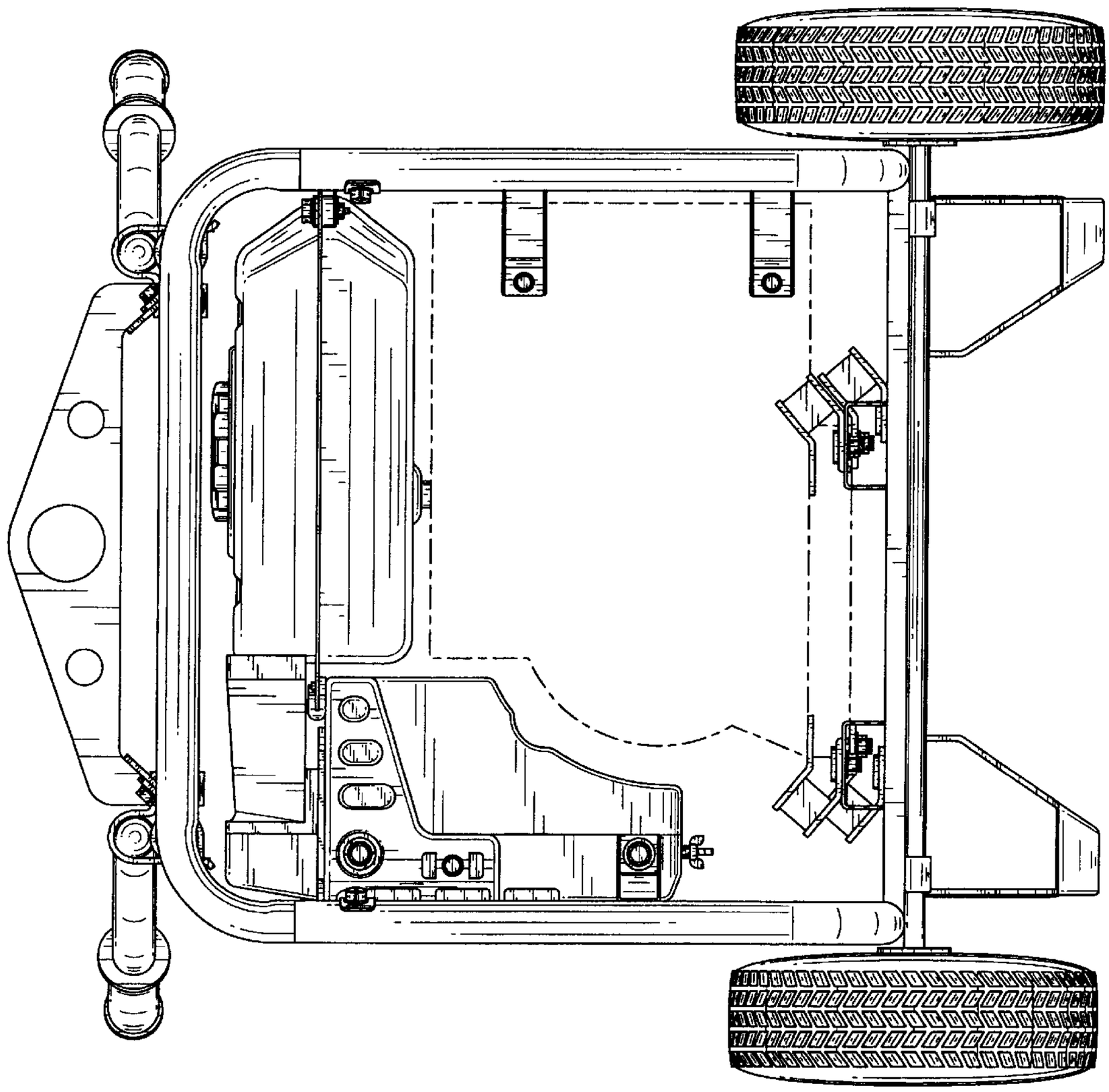

FIG. 12

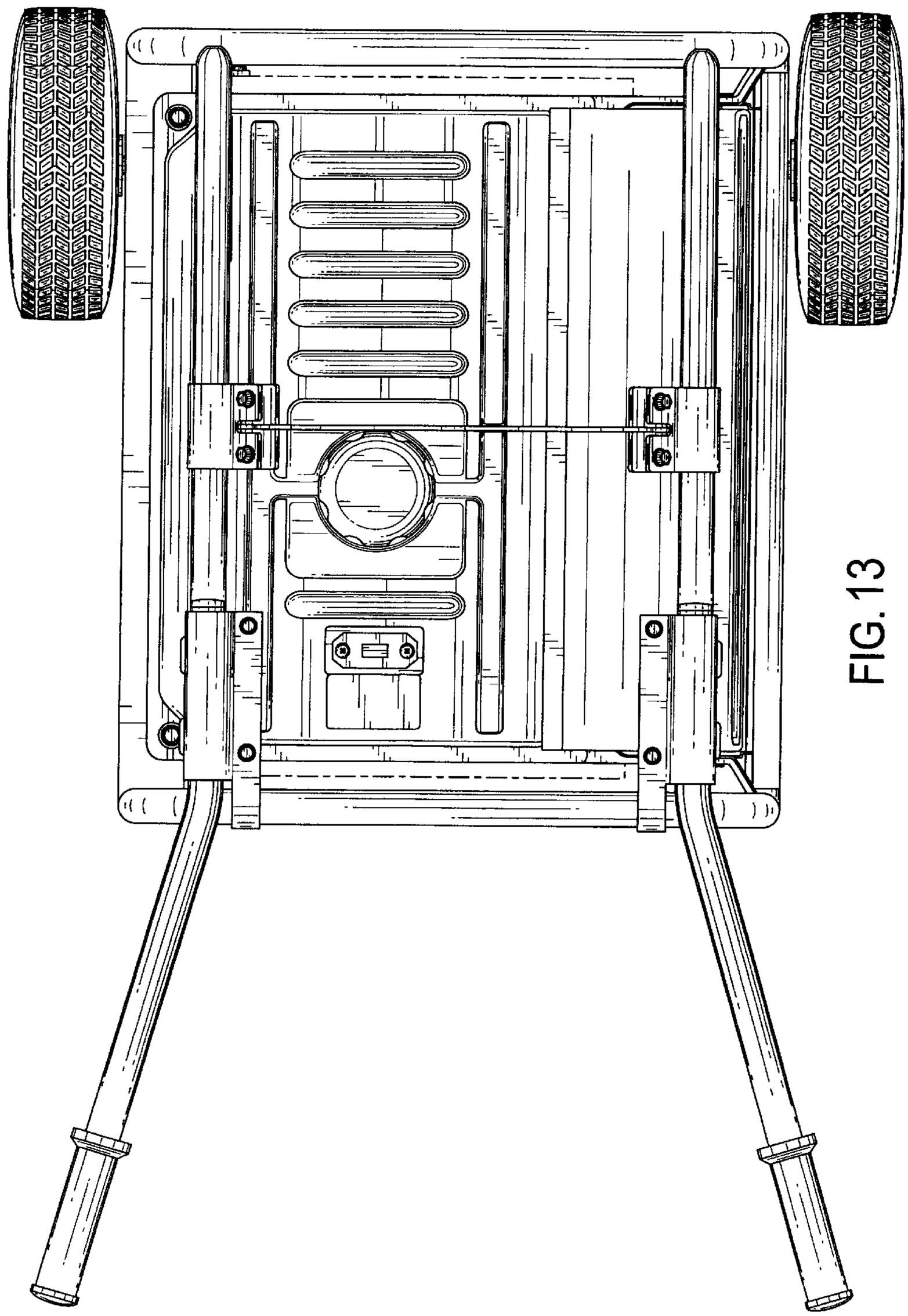

FIG. 13

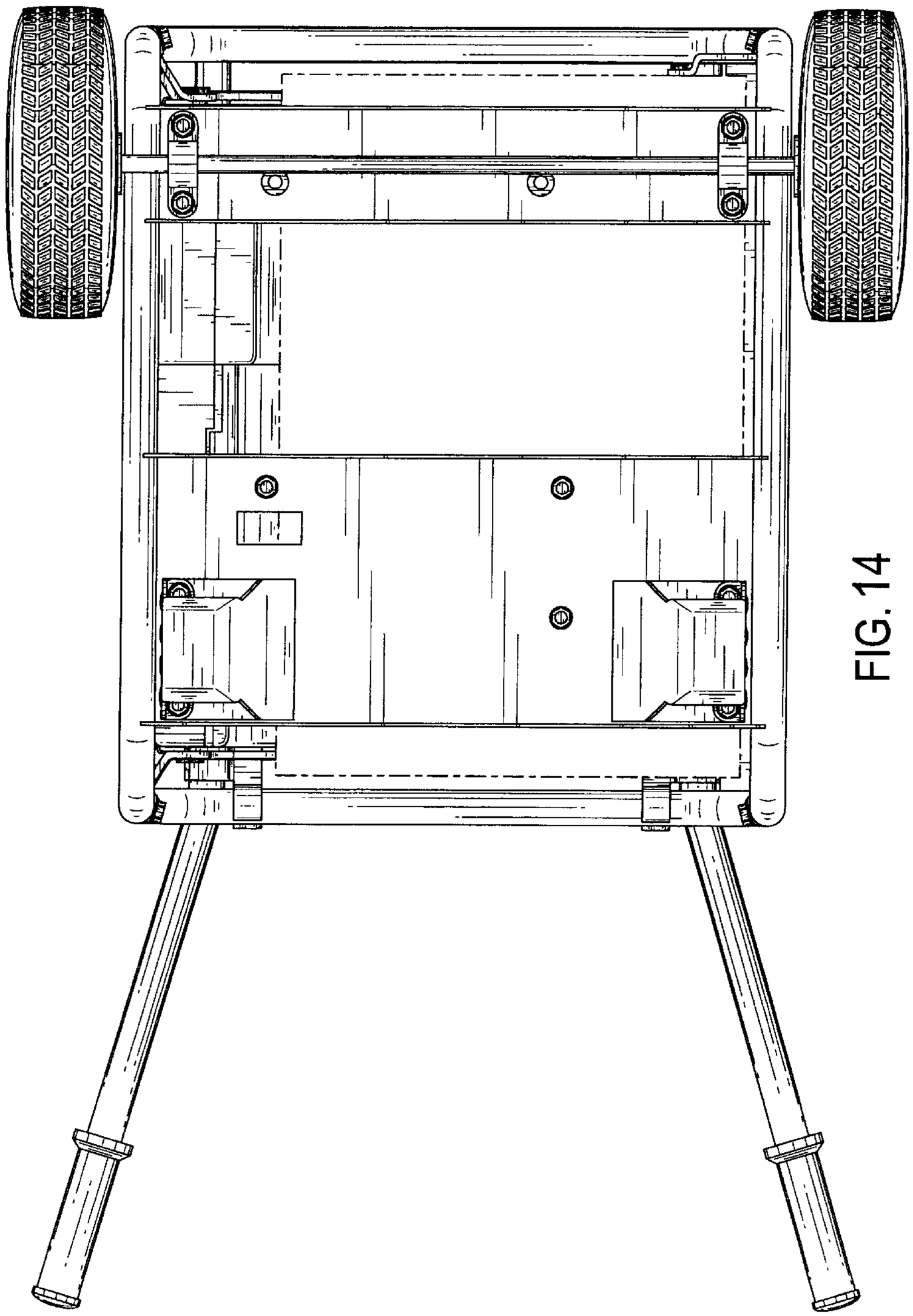

FIG. 14