US00D509399S

(12) United States Design Patent
Kanza

(10) Patent No.: US D509,399 S
(45) Date of Patent: ** Sep. 13, 2005

(54) **MICROWAVE OVEN**

(75) Inventor: **Akinobu Kanza**, Kobe (JP)

(73) Assignee: **Matsushita Electric Industrial Co., Ltd.**, Osaka (JP)

(**) Term: **14 Years**

(21) Appl. No.: **29/201,136**

(22) Filed: **Mar. 10, 2004**

(51) **LOC (8) Cl.** **07-02**
(52) **U.S. Cl.** **D7/351**
(58) **Field of Search** ..... D7/350.1, 350.3, D7/350.4, 351, 402, 405–406; 126/273 A, 275 R, 275 E, 19 M, 21 R; 219/756–758; 99/DIG. 14

(56) **References Cited**

U.S. PATENT DOCUMENTS

D323,953 S	*	2/1992	Kubo et al.	D7/351
D341,289 S		11/1993	Choi	
D357,159 S	*	4/1995	Mitsui et al.	D7/351
D371,041 S		6/1996	Matoba et al.	
D373,925 S		9/1996	Kim	
D385,155 S	*	10/1997	Weiss et al.	D7/405
D394,583 S		5/1998	Asawa et al.	
D409,437 S		5/1999	Nakano et al.	
D413,482 S		9/1999	Sugimoto et al.	
D423,868 S		5/2000	Shoji et al.	
D425,750 S	*	5/2000	Koike	D7/351
D426,102 S		6/2000	Hamada et al.	
D429,945 S		8/2000	Noda et al.	
D435,389 S		12/2000	Konno et al.	
D435,754 S		1/2001	Ozaki et al.	
D435,999 S		1/2001	Noda et al.	
D436,493 S		1/2001	Ozaki	
D437,179 S		2/2001	Ozaki et al.	
D439,468 S		3/2001	Kim	
D439,794 S		4/2001	Paul	
D442,424 S	*	5/2001	Naganuma	D7/351
D442,820 S		5/2001	Kim	
D442,821 S	*	5/2001	Naganuma	D7/351
D452,410 S		12/2001	Ichimura	
D455,046 S	*	4/2002	Hwang	D7/405
D455,931 S		4/2002	Mimura et al.	
D455,932 S		4/2002	Noda et al.	
D462,869 S		9/2002	Konno et al.	
D468,577 S		1/2003	Kanza et al.	
D468,578 S	*	1/2003	Fukuda et al.	D7/351
D477,964 S		8/2003	Kanza	
D478,465 S		8/2003	Kanza	

OTHER PUBLICATIONS

Panasonic France's Website page for Microwave Oven (NN–L760W) Sep. 5, 2002.
Panasonic France's Website page for Microwave Oven (NN–A771S) Sep. 5, 2002.
Panasonic France's Website page for Microwave Oven (NN–A890W) Sep. 18, 2002.

* cited by examiner

Primary Examiner—Ruth McInroy
(74) *Attorney, Agent, or Firm*—Brinks Hofer Gilson & Lione

(57) **CLAIM**

The ornamental design for a microwave oven, as shown and described.

DESCRIPTION

FIG. **1** is a top perspective view of a microwave oven of the present invention;
FIG. **2** is a front view thereof;
FIG. **3** is a top view thereof;
FIG. **4** is a bottom view thereof;
FIG. **5** is a first side view thereof;
FIG. **6** is a second side view thereof; and,
FIG. **7** is a rear view thereof.

1 Claim, 4 Drawing Sheets

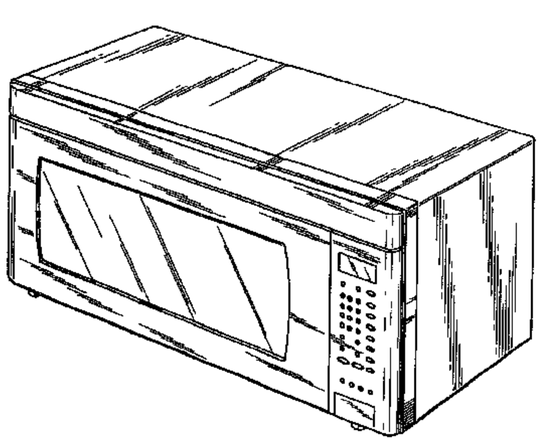

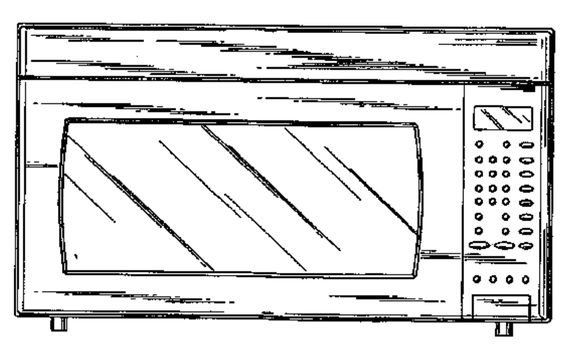

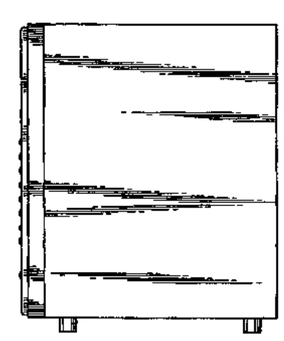

FIG. 1

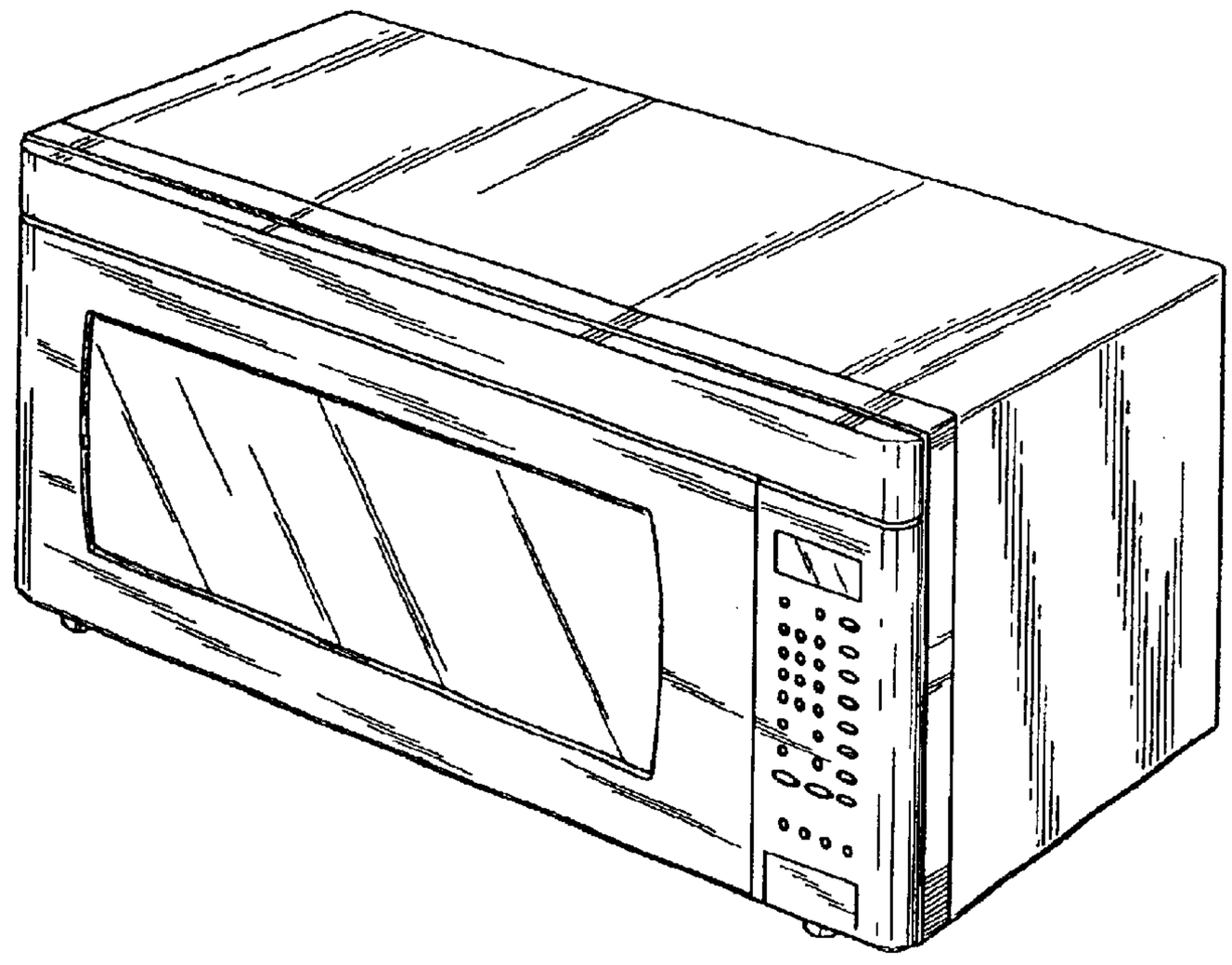

FIG. 2

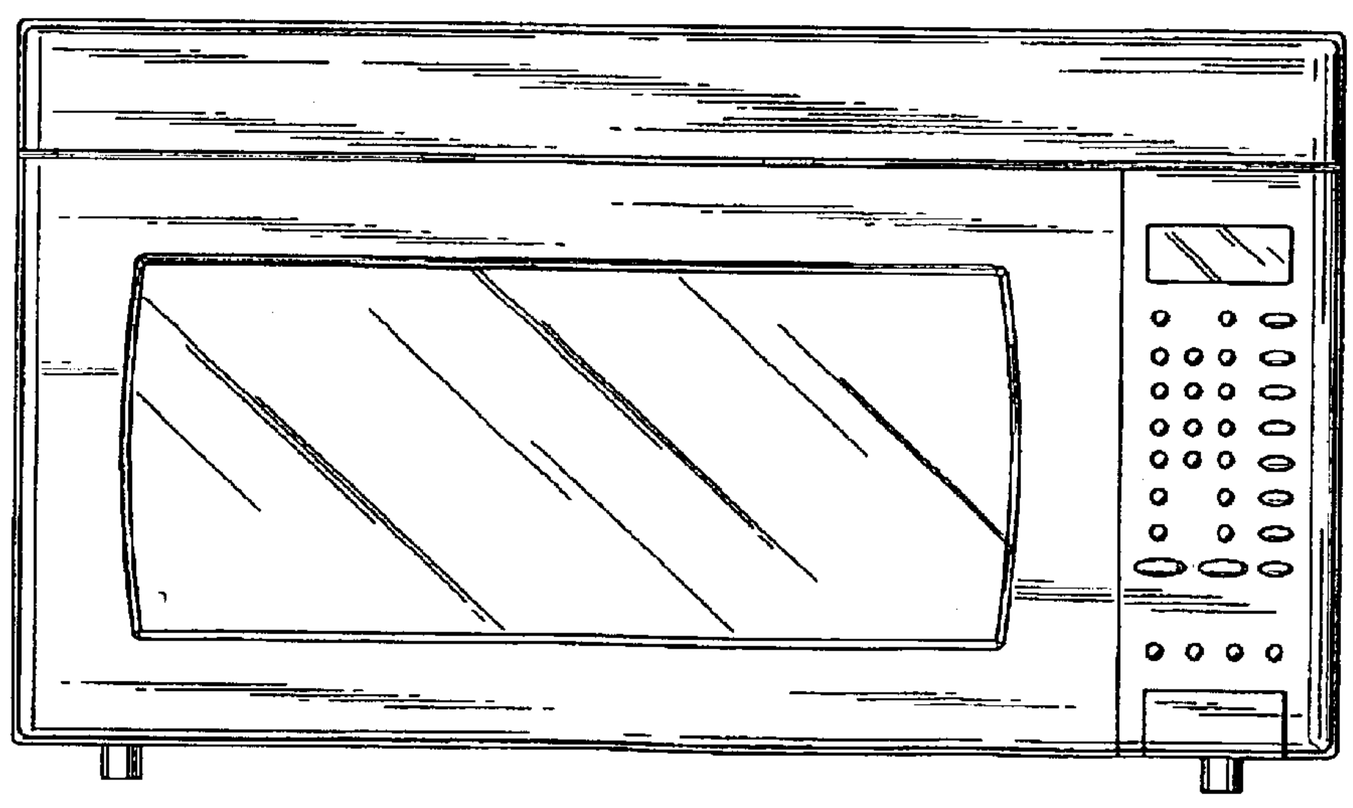

FIG. 3

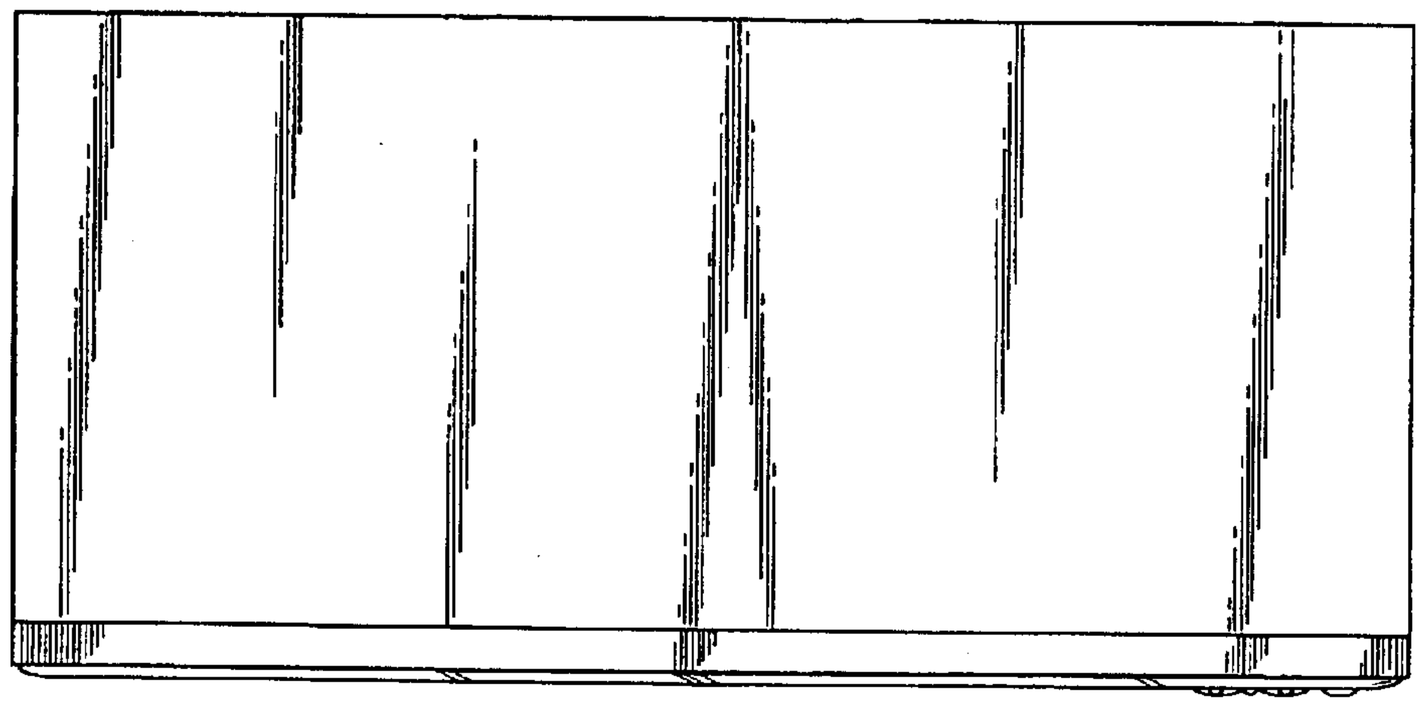

FIG. 4

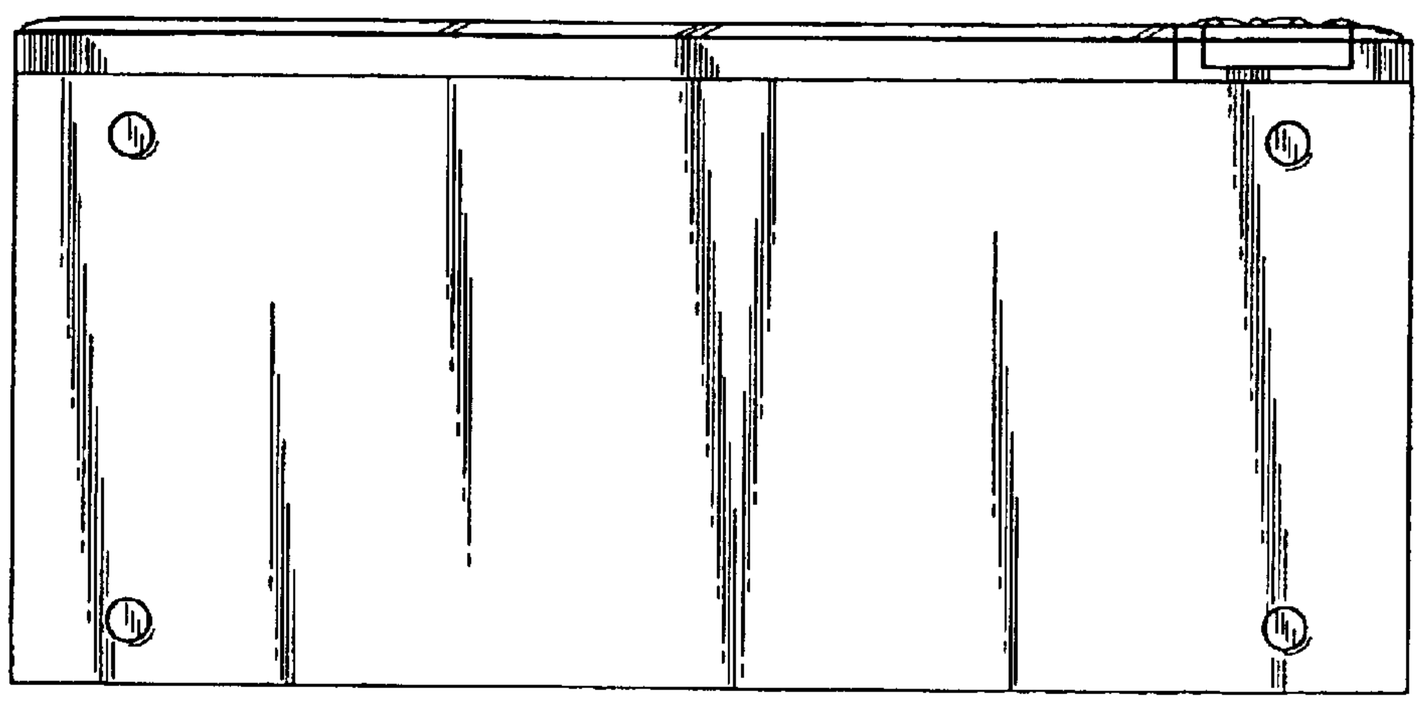

FIG. 5

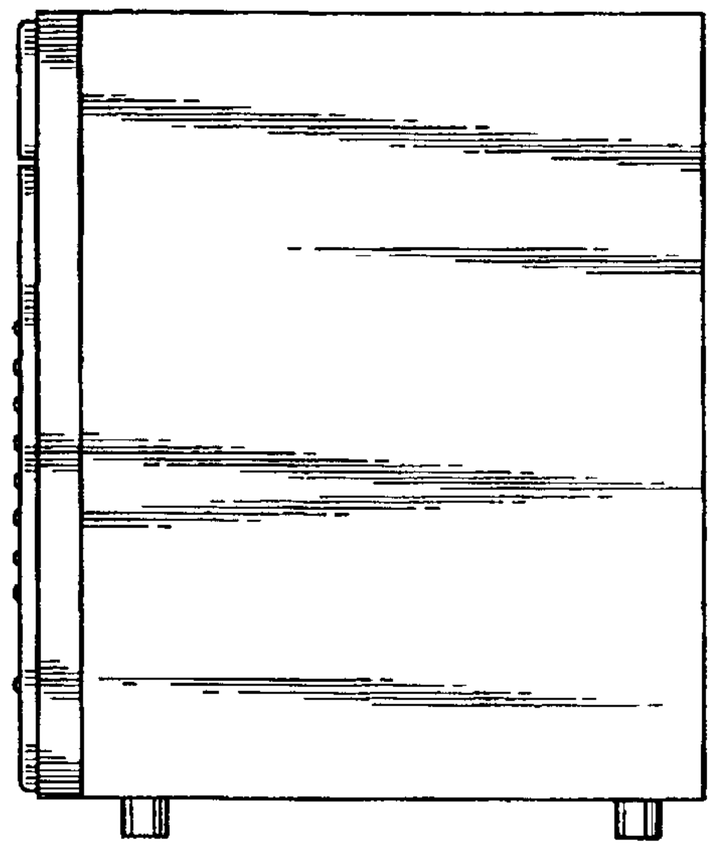

FIG. 6

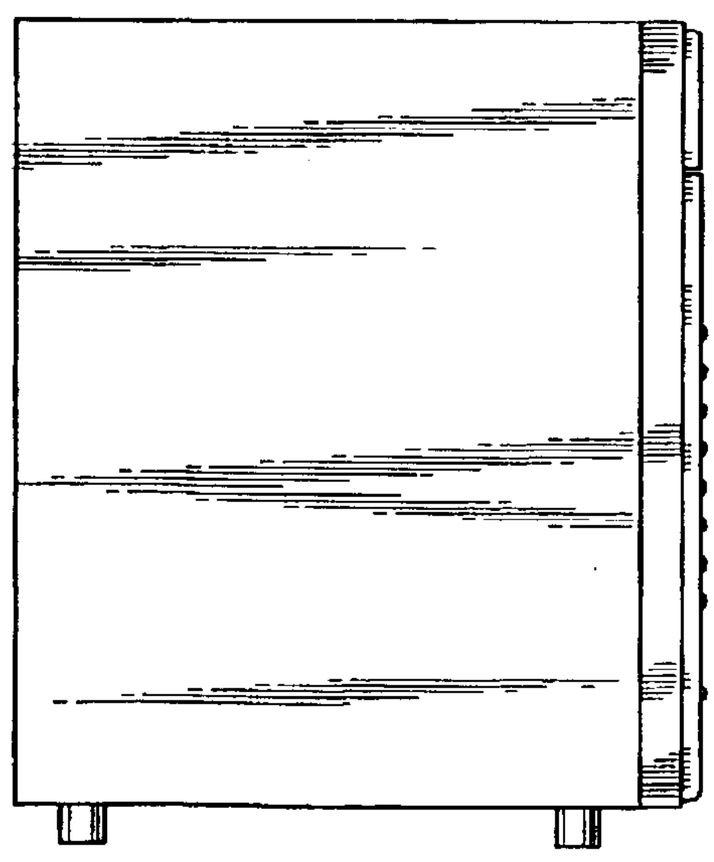
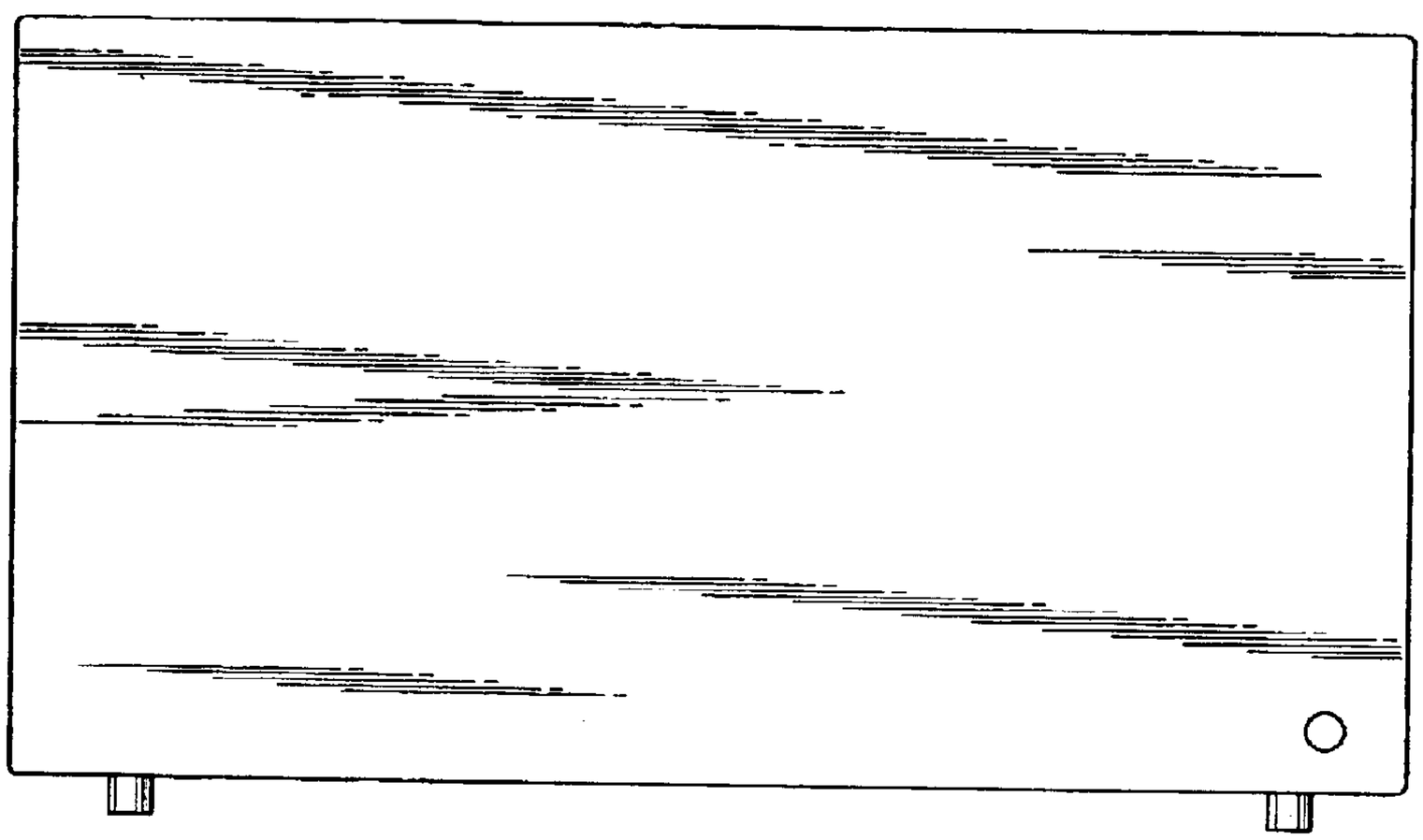
FIG. 7