US00D509198S

(12) United States Design Patent

Ahn

(10) Patent No.: US D509,198 S
(45) Date of Patent: ** Sep. 6, 2005

(54) **TELEVISION MONITOR**

(75) Inventor: **Kyoung Mo Ahn**, Kyunggi-do (KR)

(73) Assignee: **LG Electronics, Inc.**, Seoul (KR)

(**) Term: **14 Years**

(21) Appl. No.: **29/196,133**

(22) Filed: **Dec. 23, 2003**

(30) **Foreign Application Priority Data**

Jun. 27, 2003 (KR) 30-2003-0018158

(51) **LOC (8) Cl.** **14-03**
(52) **U.S. Cl.** **D14/126**
(58) **Field of Search** D14/125–134, D14/239, 371, 374–376; 312/7.2; 348/836, 838, 180, 184, 325, 739; 341/12; 248/917–924; 345/104, 133, 156, 168, 87, 173; 353/74

(56) **References Cited**

U.S. PATENT DOCUMENTS

D416,005 S * 11/1999 Paek D14/379
D417,659 S * 12/1999 Takemasa D14/374
D419,977 S * 2/2000 Chuo D14/375
D431,537 S * 10/2000 Saeki et al. D14/126
D432,101 S * 10/2000 Oba D14/126
D432,102 S * 10/2000 Arie D14/375
D460,425 S * 7/2002 Joe D14/126

* cited by examiner

Primary Examiner—Raphael Barkai
(74) *Attorney, Agent, or Firm*—Birch, Stewart, Kolasch & Birch, LLP

(57) **CLAIM**

The ornamental design for television monitor, as shown and described.

DESCRIPTION

FIG. **1** is a perspective view of the television monitor;
FIG. **2** is a front view thereof;
FIG. **3** is a rear view thereof;
FIG. **4** is a left side view thereof where the right side view is a mirror image;
FIG. **5** is a top plan view thereof; and,
FIG. **6** is a bottom plan view thereof.

1 Claim, 4 Drawing Sheets

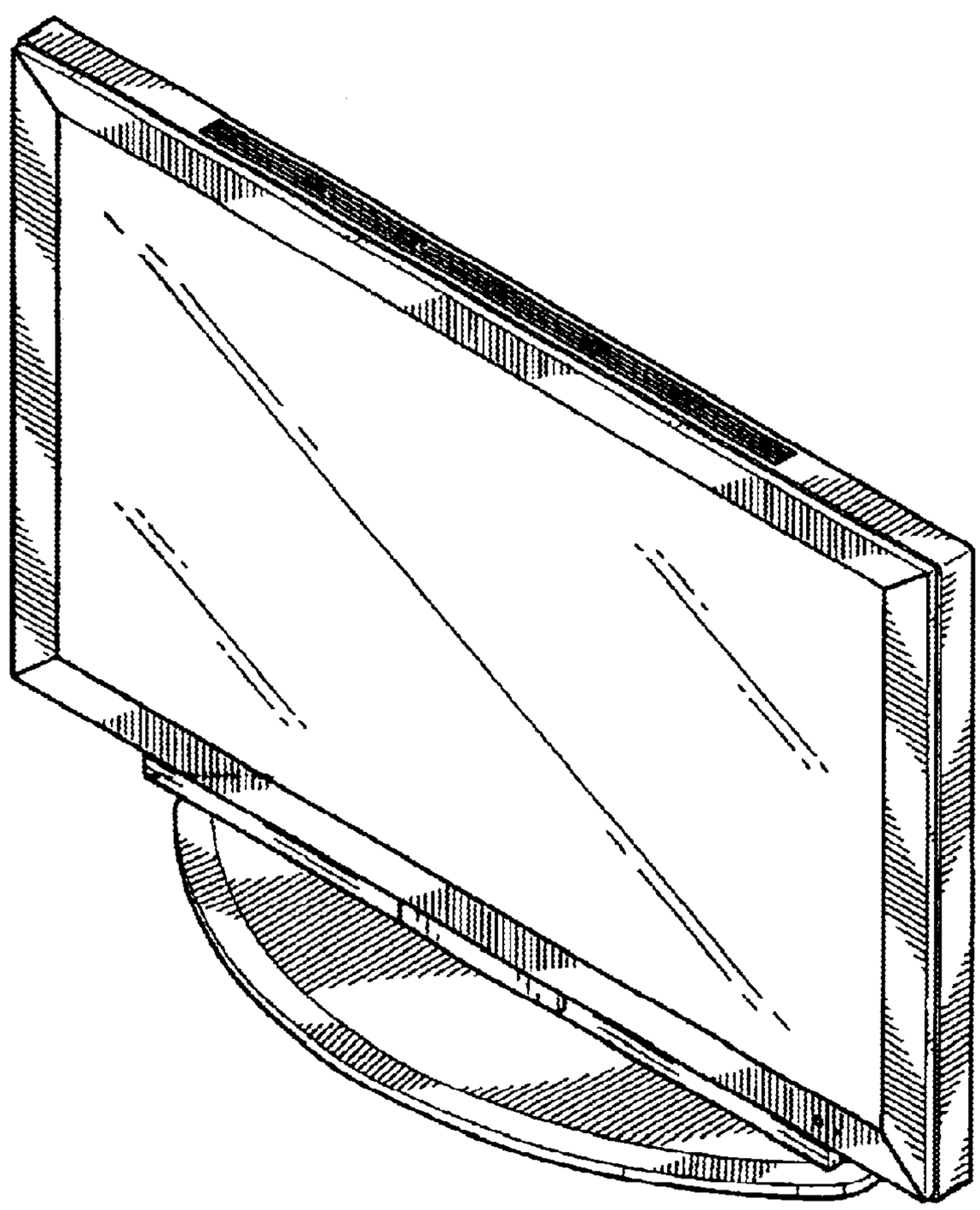

FIG. 1

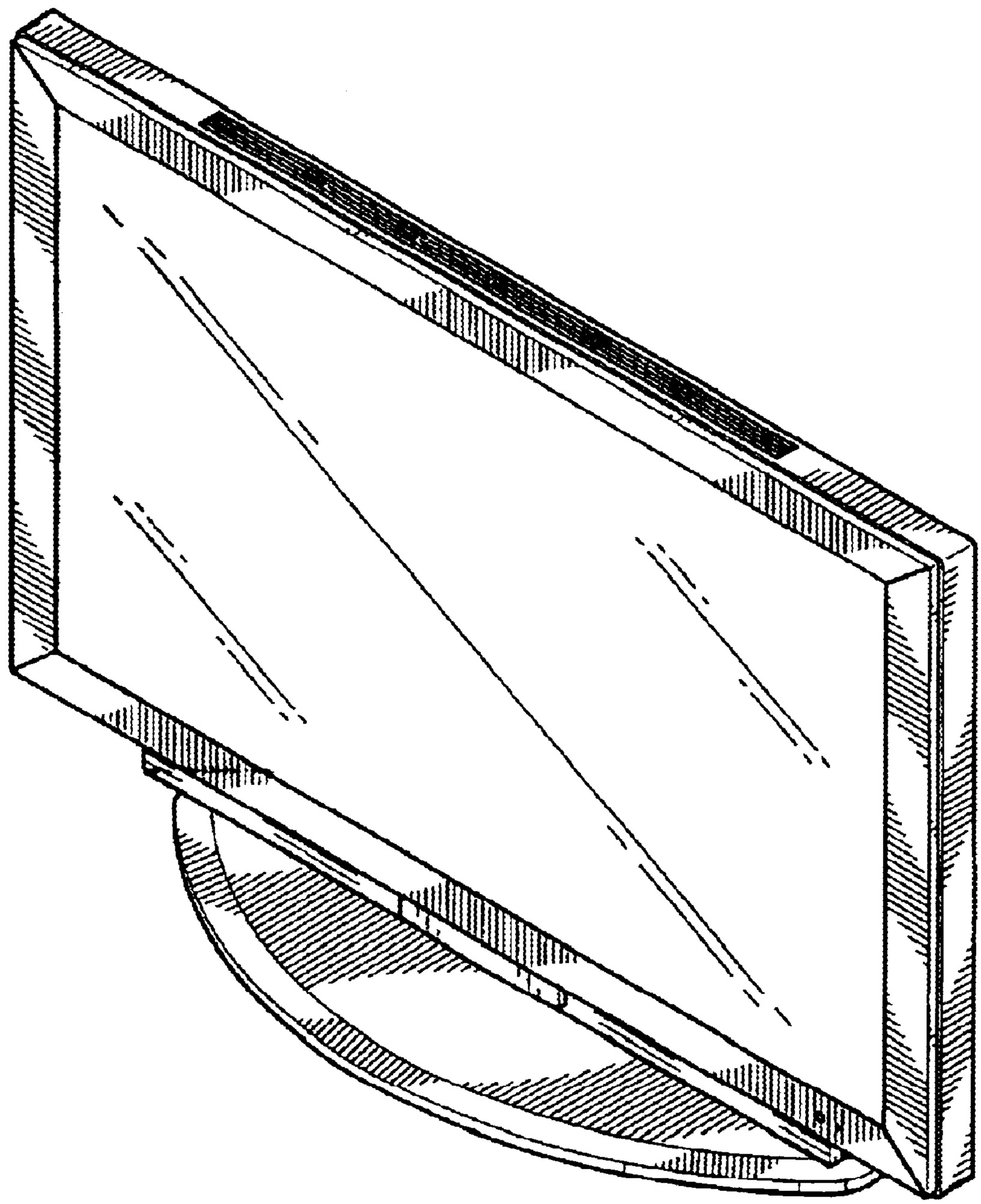

FIG. 2

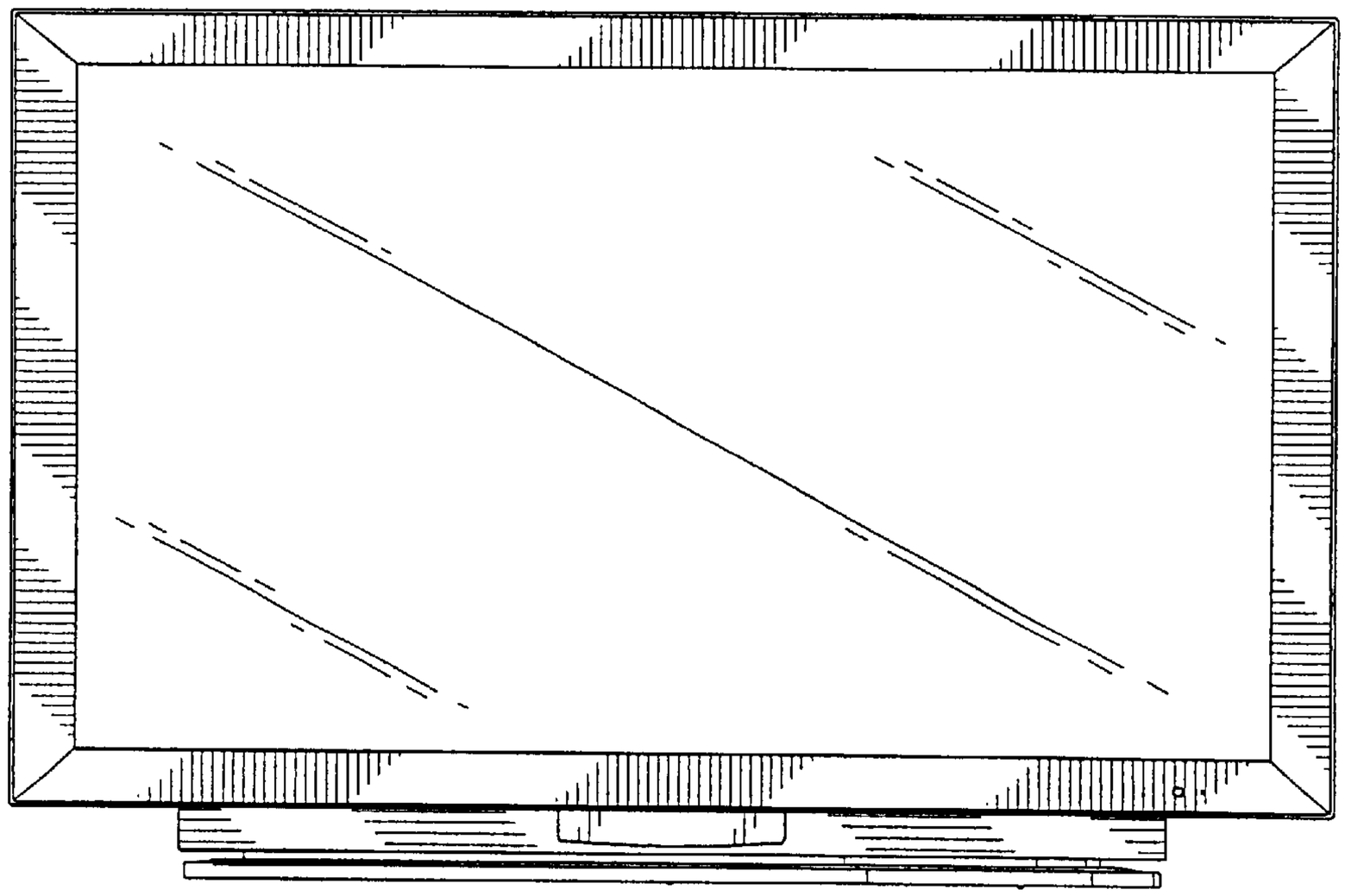

FIG. 3

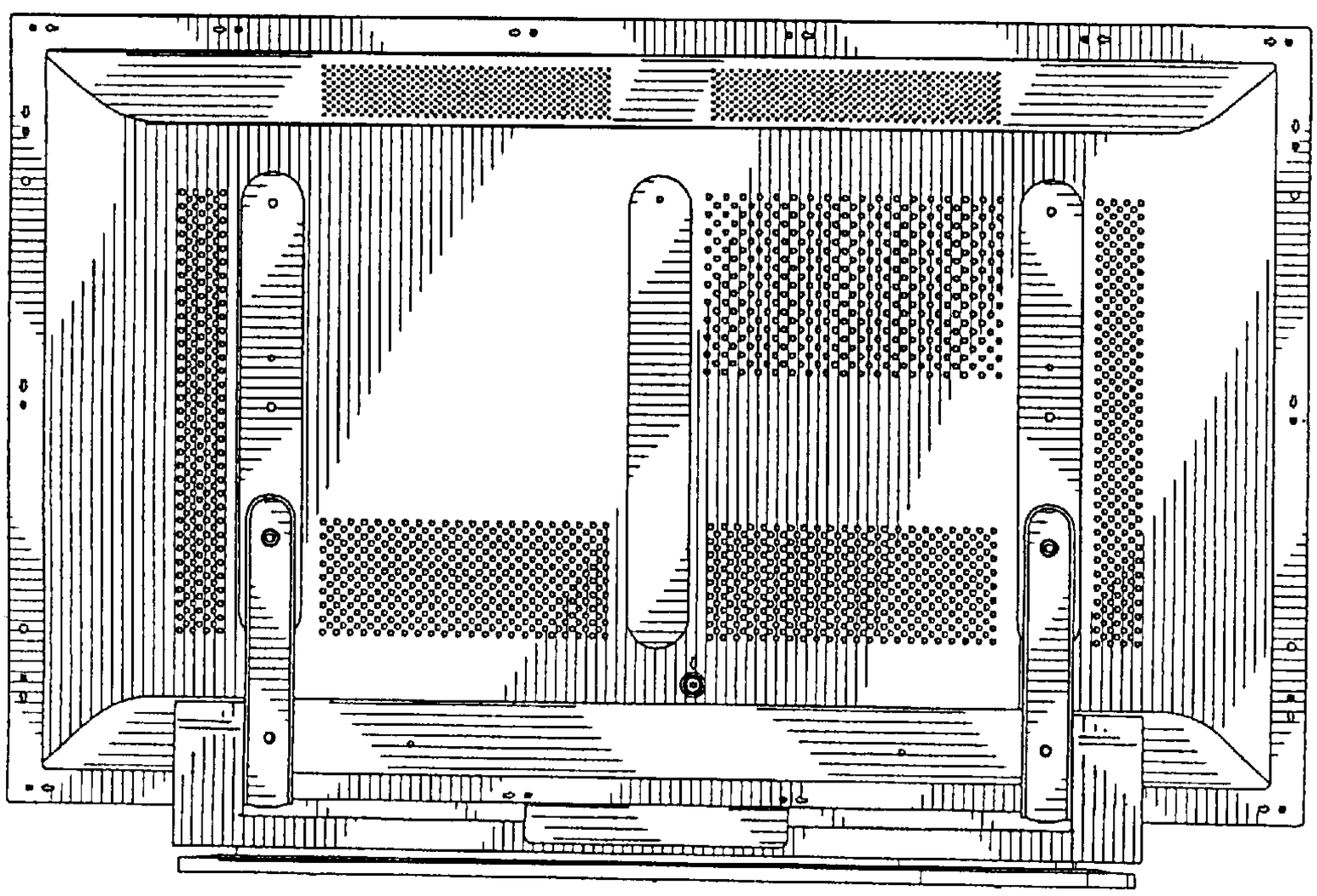

FIG. 4

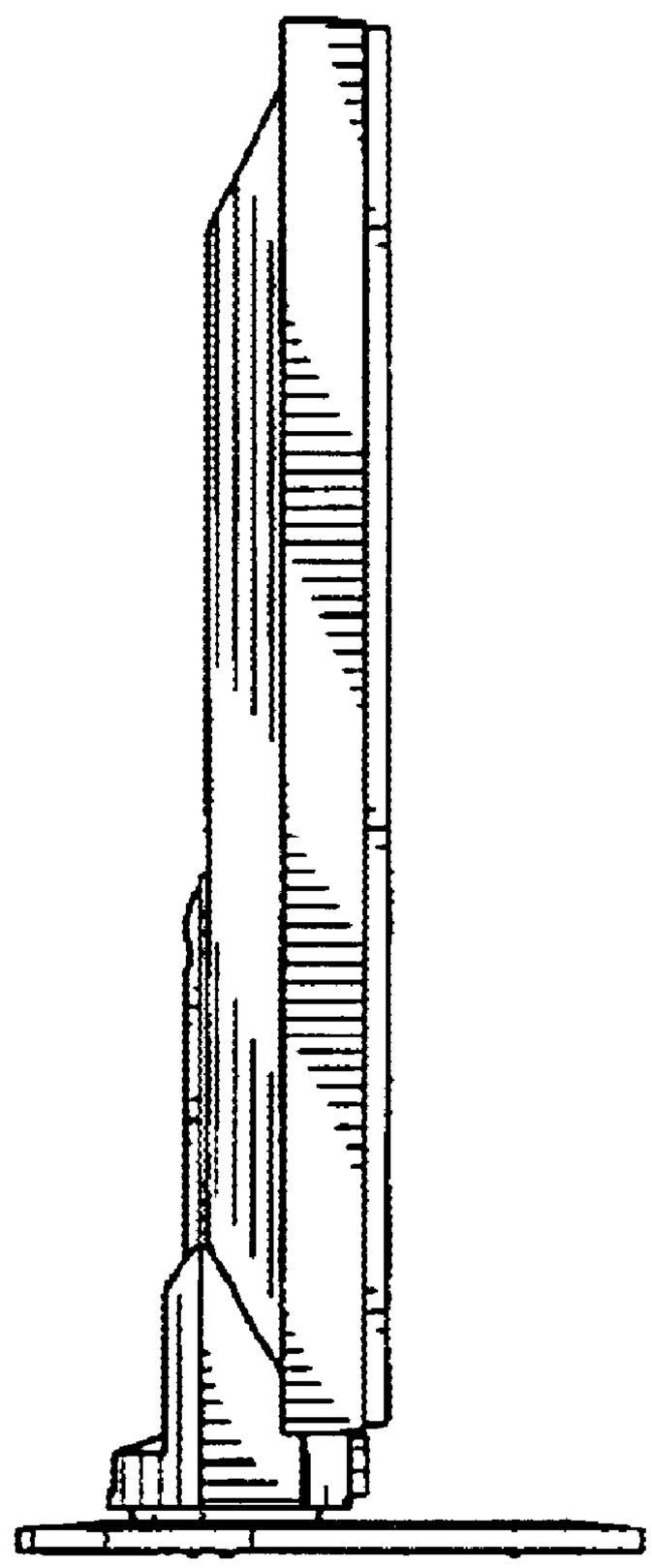

FIG. 5

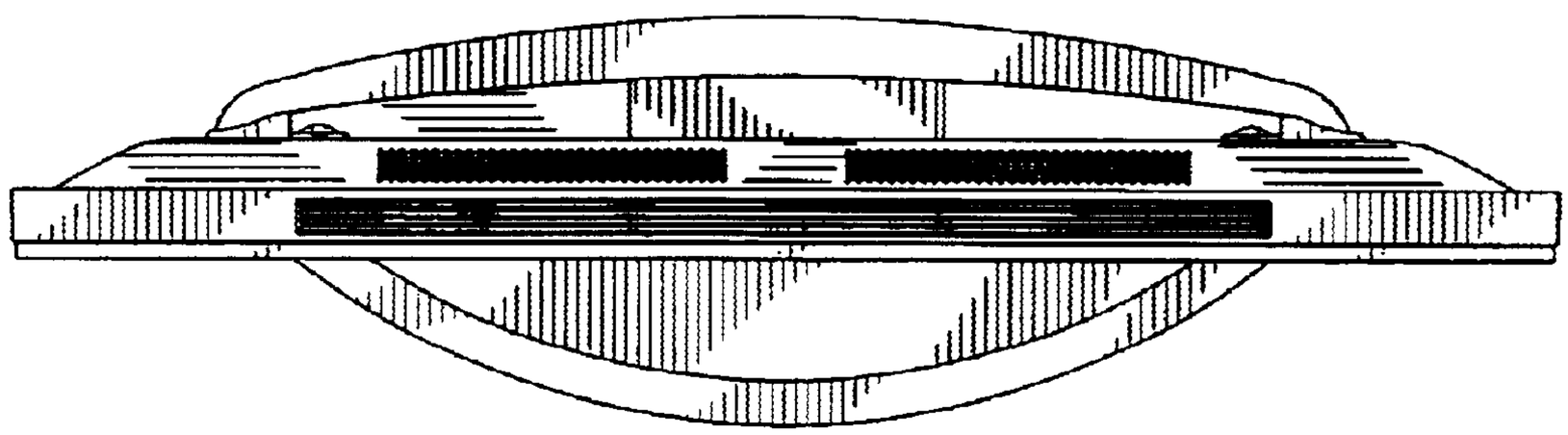
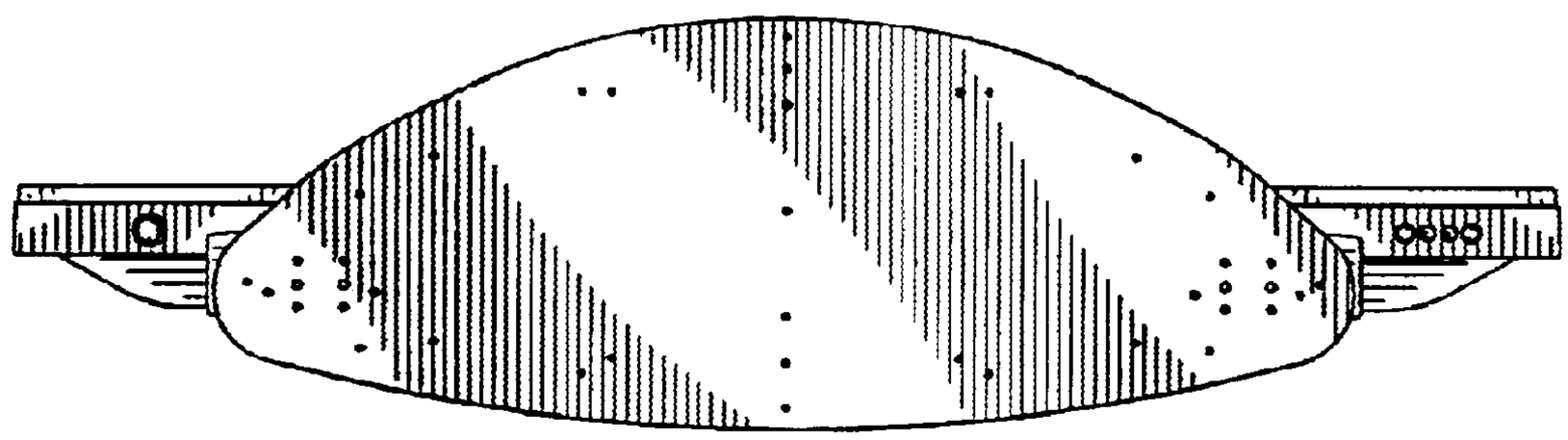
FIG. 6