US00D506153S

(12) United States Design Patent

Morel

(10) Patent No.: US D506,153 S
(45) Date of Patent: ** Jun. 14, 2005

(54) **ELECTRICAL CURRENT SENSOR**

(75) Inventor: **Pascal Morel**, Saint Pierre en Faucigny (FR)

(73) Assignee: **Liaisons Electroniques-Mecaniques LEM S.A.**, Geneva (CH)

(**) Term: **14 Years**

(21) Appl. No.: **29/198,301**

(22) Filed: **Jan. 28, 2004**

(30) **Foreign Application Priority Data**

Aug. 14, 2003 (CH) 129881

(51) **LOC (8) Cl.** **10-04**
(52) **U.S. Cl.** **D10/78**
(58) **Field of Search** D10/78; 324/110, 324/107, 115, 117, 127, 142, 157; 336/175, 178, 216

(56) **References Cited**

U.S. PATENT DOCUMENTS

6,005,383 A * 12/1999 Savary et al. ..... 324/117 H
D420,297 S * 2/2000 Cattaneo D10/78
6,769,166 B1 * 8/2004 Blanchard 29/595

OTHER PUBLICATIONS

Technical Specification Sheets for LEM Voltage Transducer CV 4–3000.
Technical Specification Sheets for LEM Voltage Transducer LV 200–AW.
Technical Specification Sheets for LEM Voltage Transducer LV 100.
Technical Specification Sheets for LEM Voltage Transducer LV 200–AW/2/1600.

* cited by examiner

Primary Examiner—Antoine D. Davis
(74) *Attorney, Agent, or Firm*—Clifford W. Browning; Woodard, Emhardt, Moriarty, McNett & Henry LLP

(57) **CLAIM**

The ornamental design for an electrical current sensor, as shown and described.

DESCRIPTION

FIG. **1** is a top perspective view of an electrical current sensor, showing my new design.
FIG. **2** is a bottom perspective view thereof.
FIG. **3** is a bottom plan view thereof.
FIG. **4** is a left side view thereof.
FIG. **5** is a rear view thereof.
FIG. **6** is a right side view thereof.
FIG. **7** is a front view thereof.
FIG. **8** is a top view thereof.
FIG. **9** is a top perspective view of a second variant of an electrical current sensor, showing my new design.
FIG. **10** is a bottom perspective plan view thereof.
FIG. **11** is a bottom plan view thereof.
FIG. **12** is a left side view thereof.
FIG. **13** is a front view thereof.
FIG. **14** is a right side view thereof.
FIG. **15** is a rear view thereof.
FIG. **16** is a top plan view thereof.
FIG. **17** is a front perspective view of a third variant of an electrical current sensor, showing my new design.
FIG. **18** is a bottom perspective view thereof.
FIG. **19** is a bottom plan view thereof.
FIG. **20** is a left side view thereof.
FIG. **21** is a front view thereof.
FIG. **22** is a right side view thereof.
FIG. **23** is a rear view thereof; and,
FIG. **24** is a top plan view thereof.

1 Claim, 6 Drawing Sheets

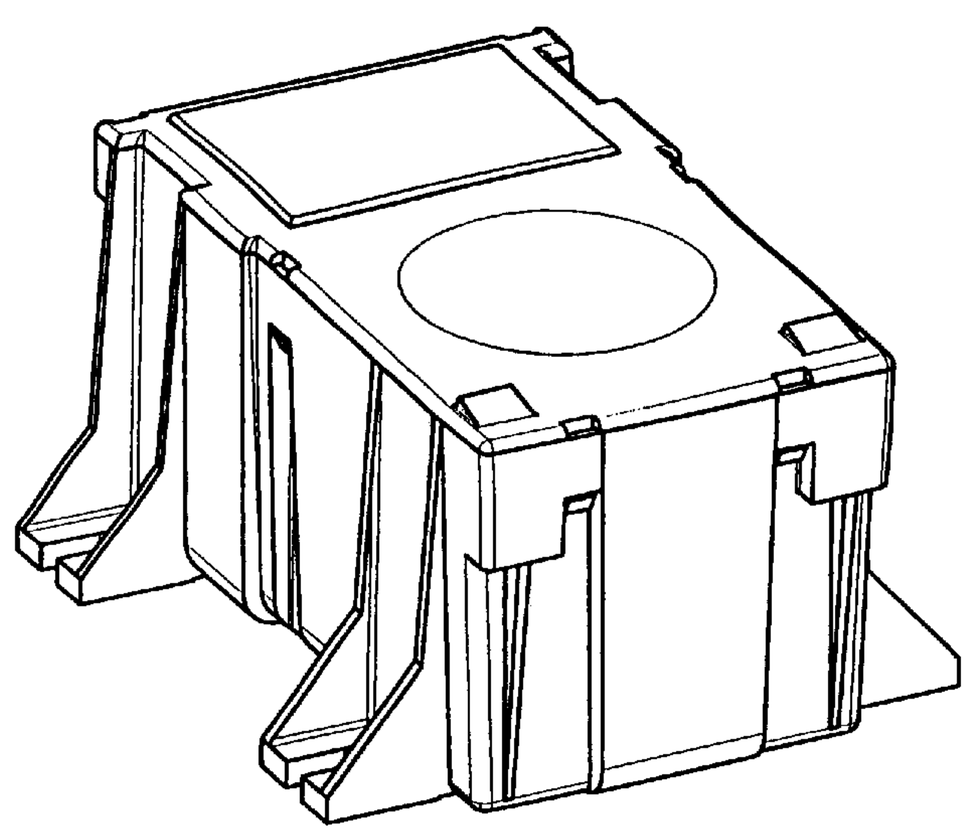

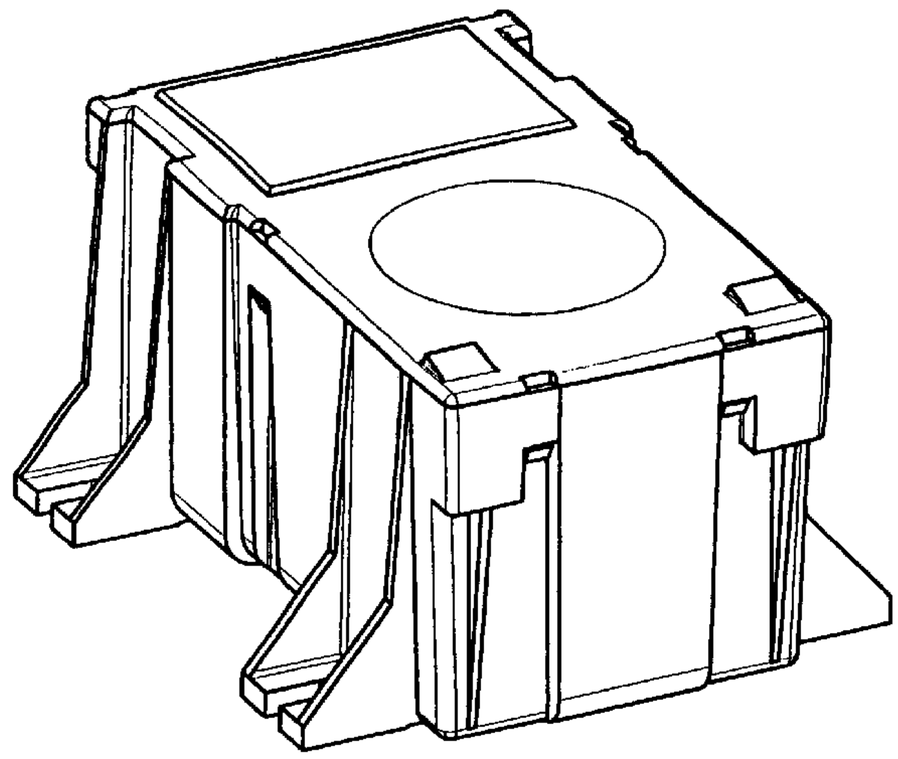

Fig. 1

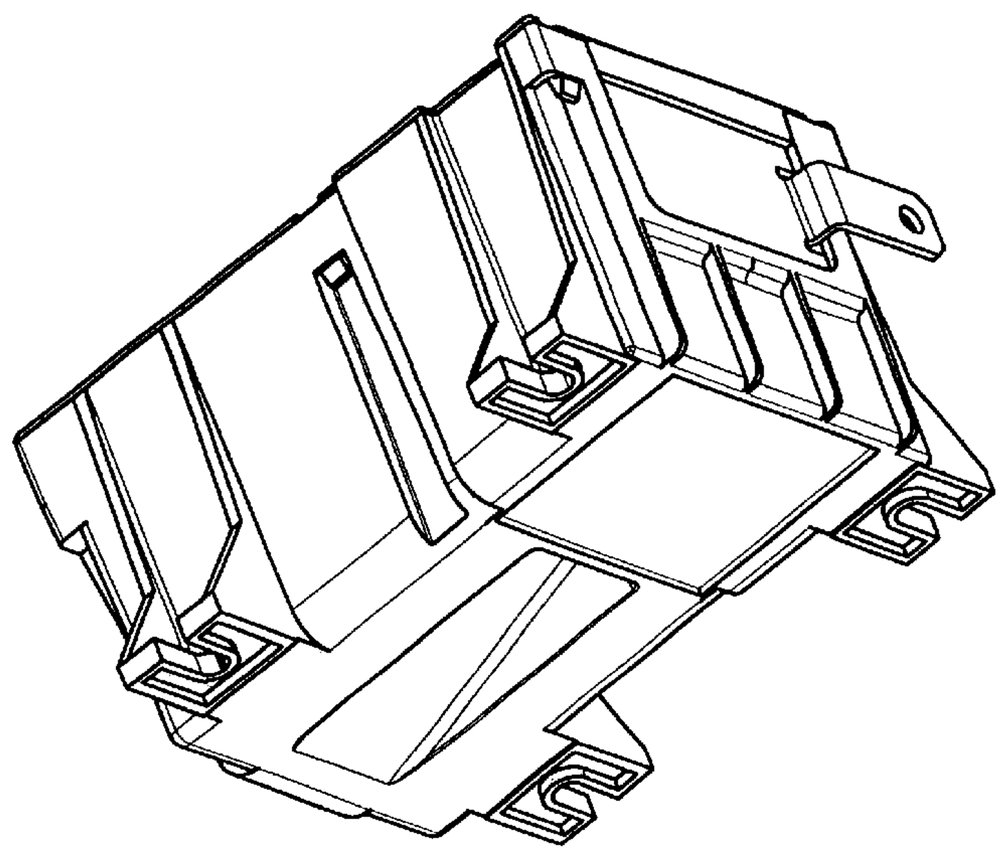

Fig. 2

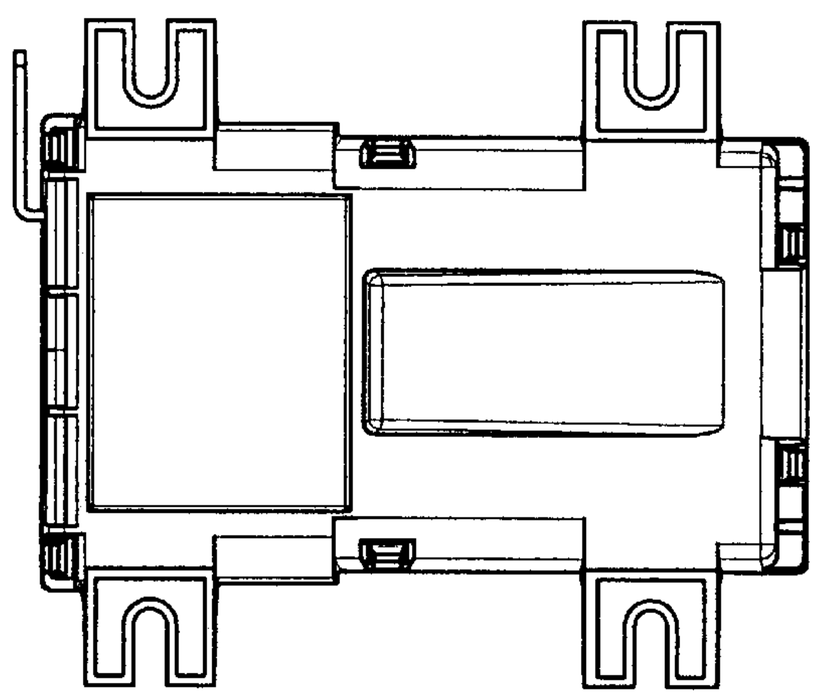

Fig. 3

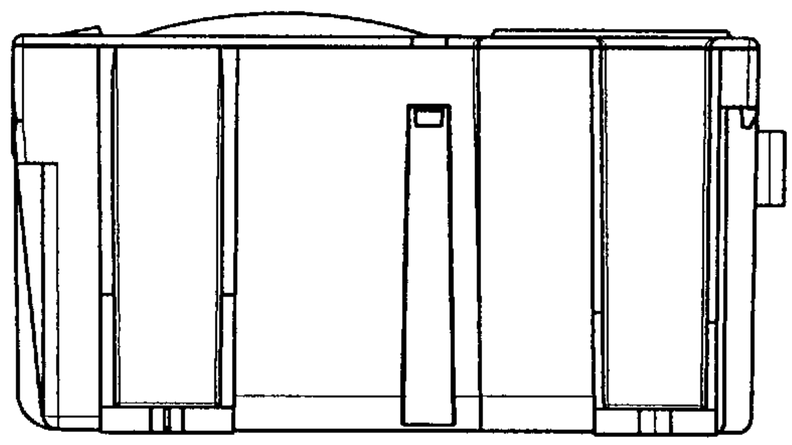

Fig. 4

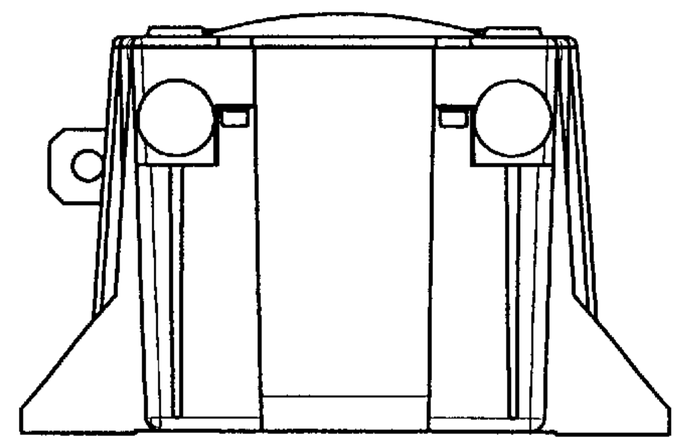

Fig. 5

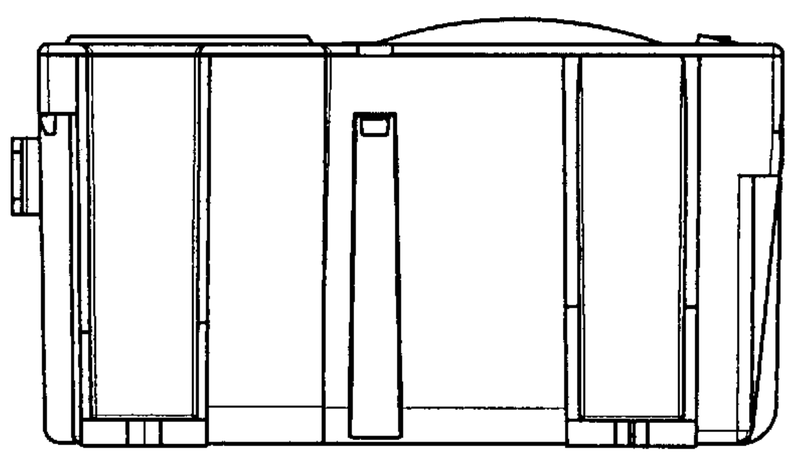

Fig. 6

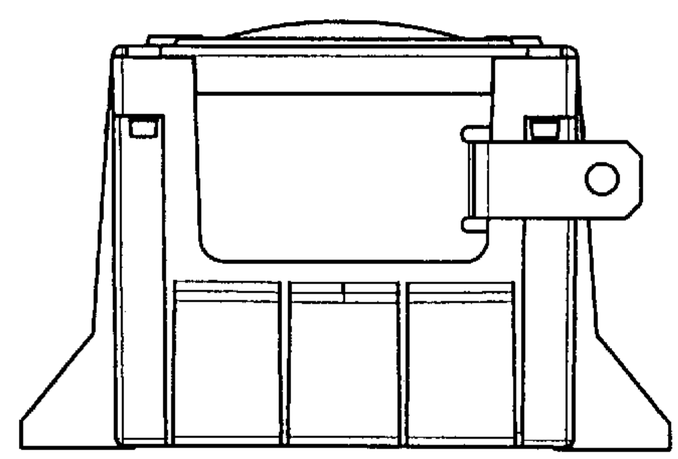

Fig. 7

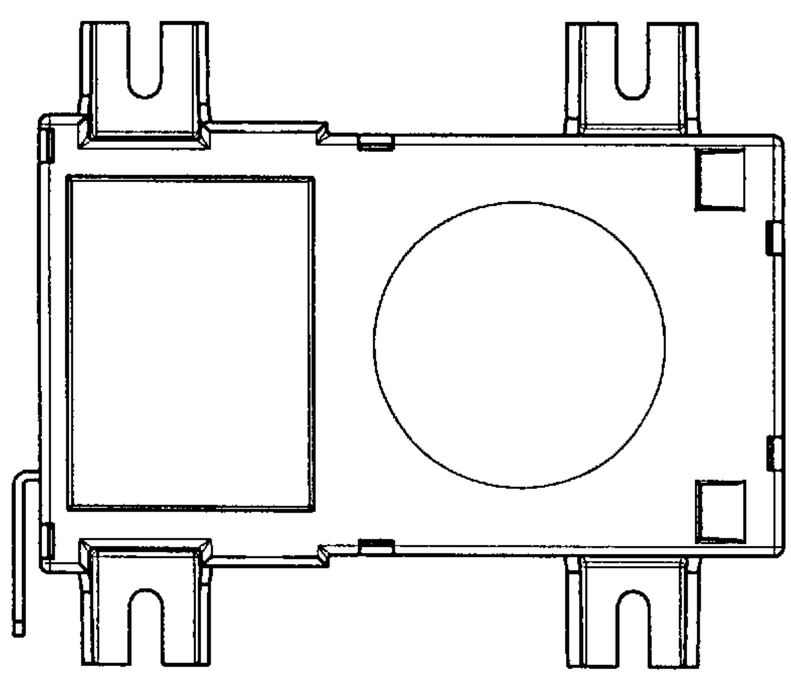

Fig. 8

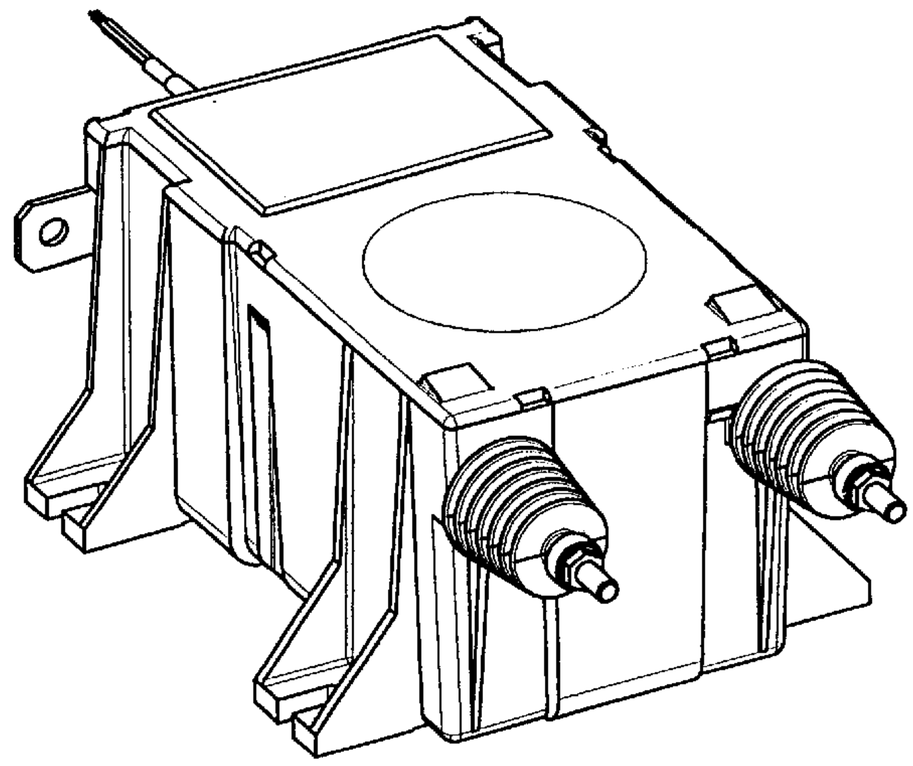

Fig. 9

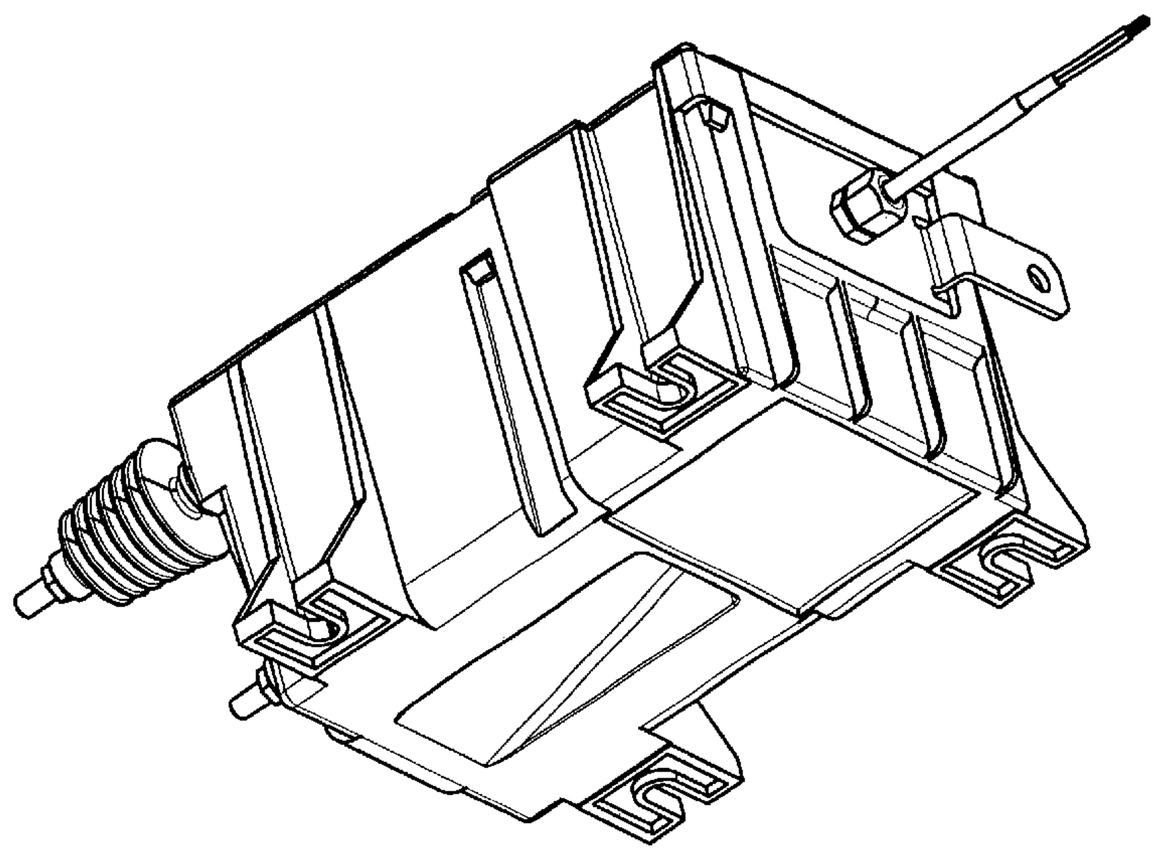

Fig. 10

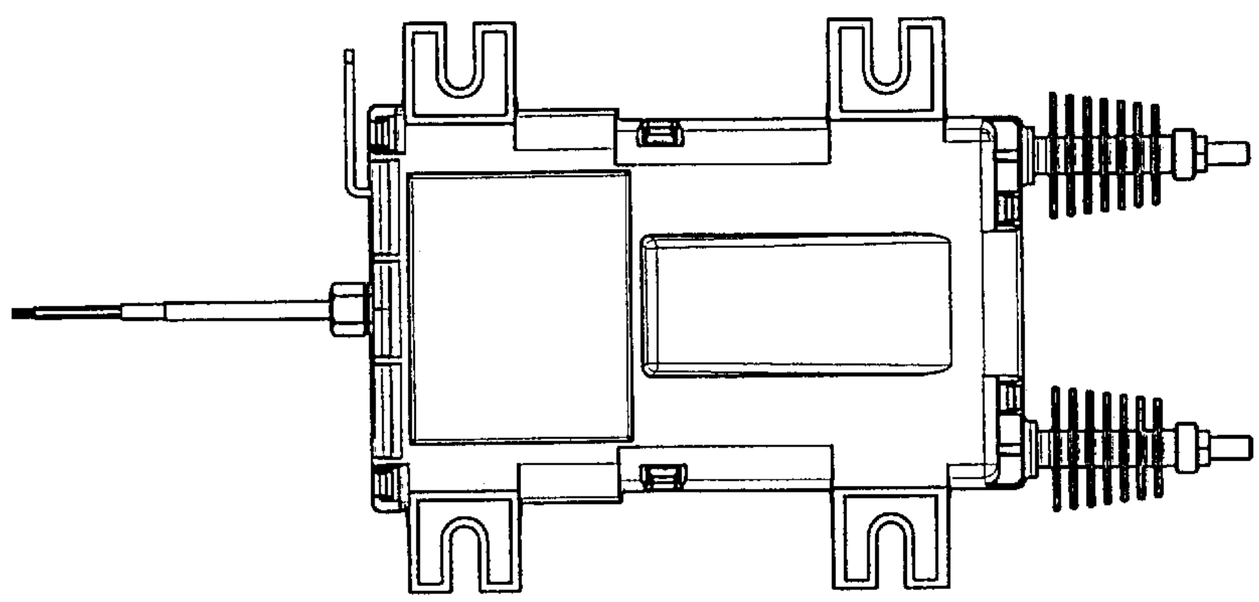

Fig. 11

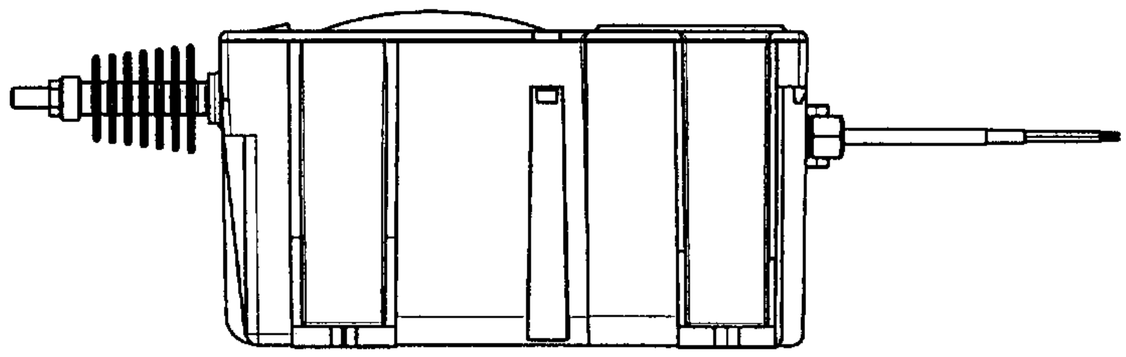

Fig. 12

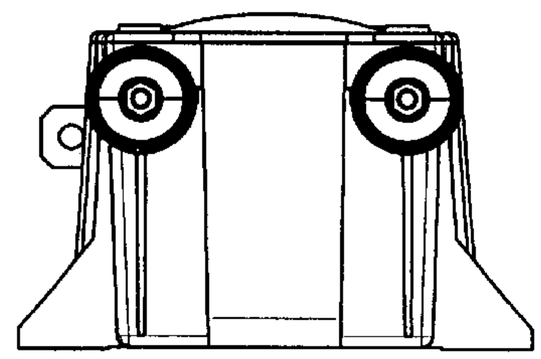

Fig. 13

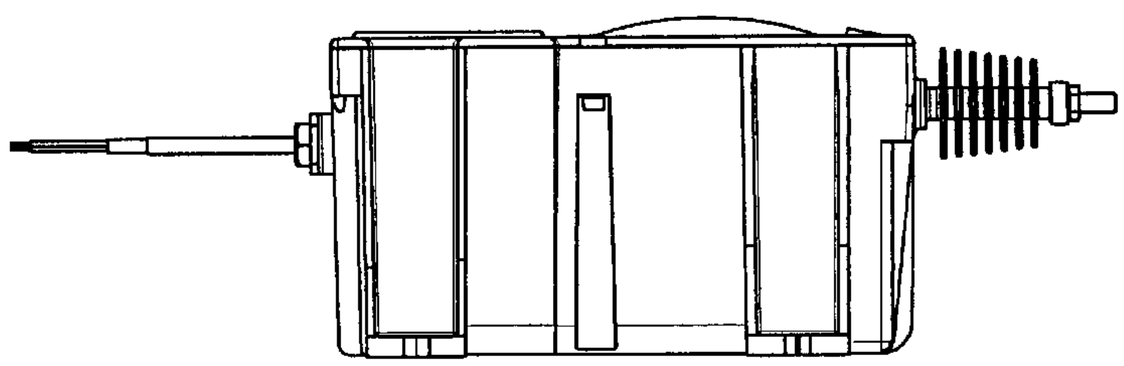

Fig. 14

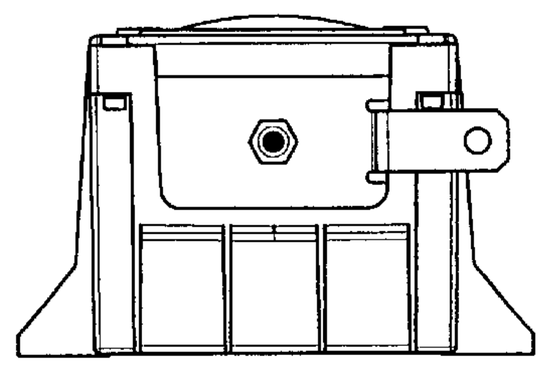

Fig. 15

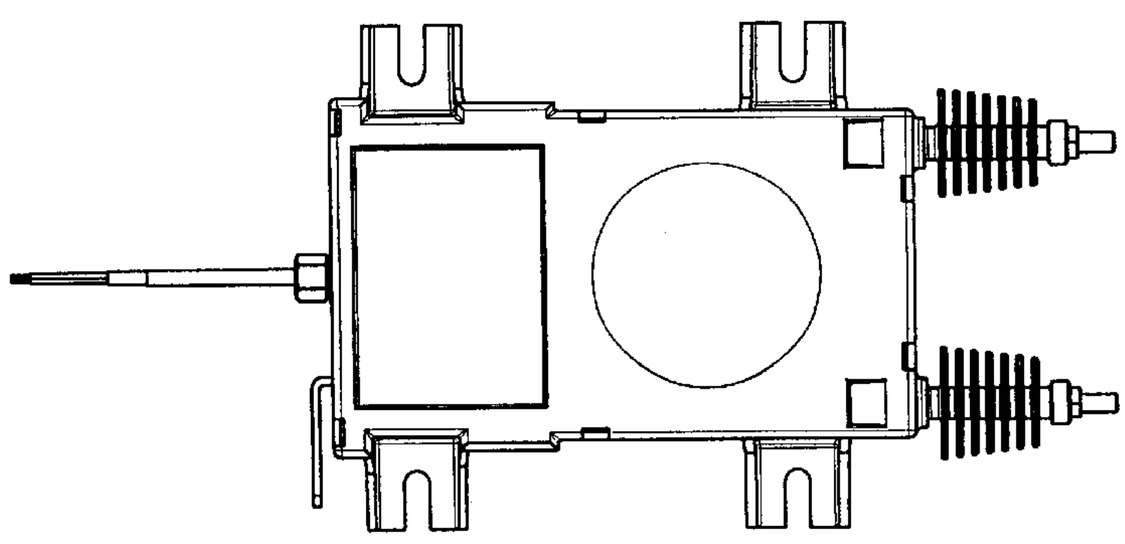

Fig. 16

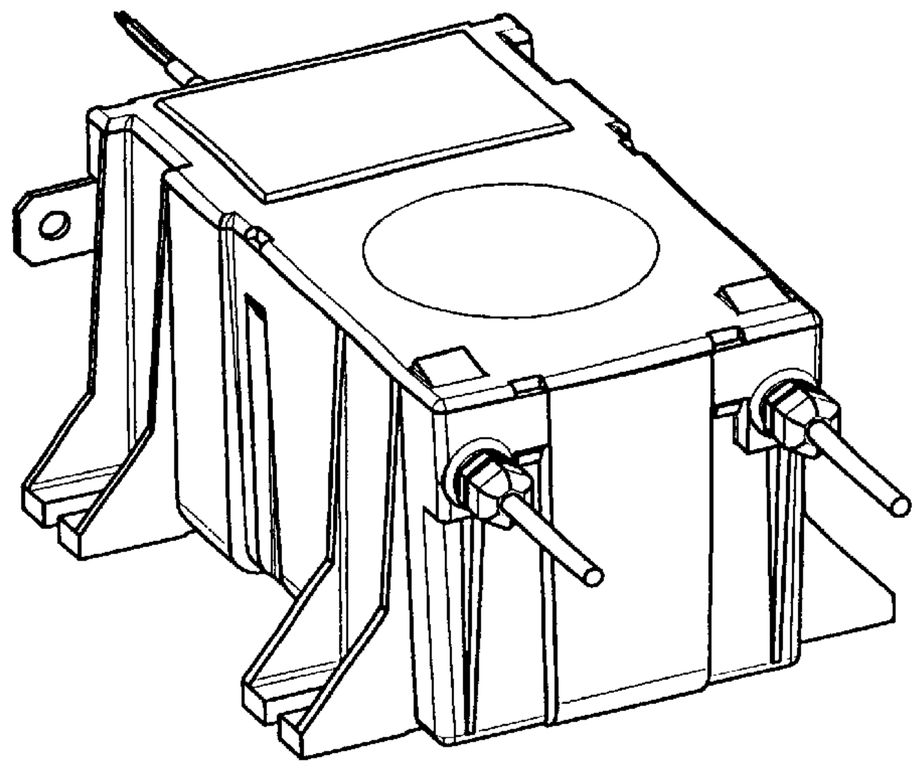

Fig. 17

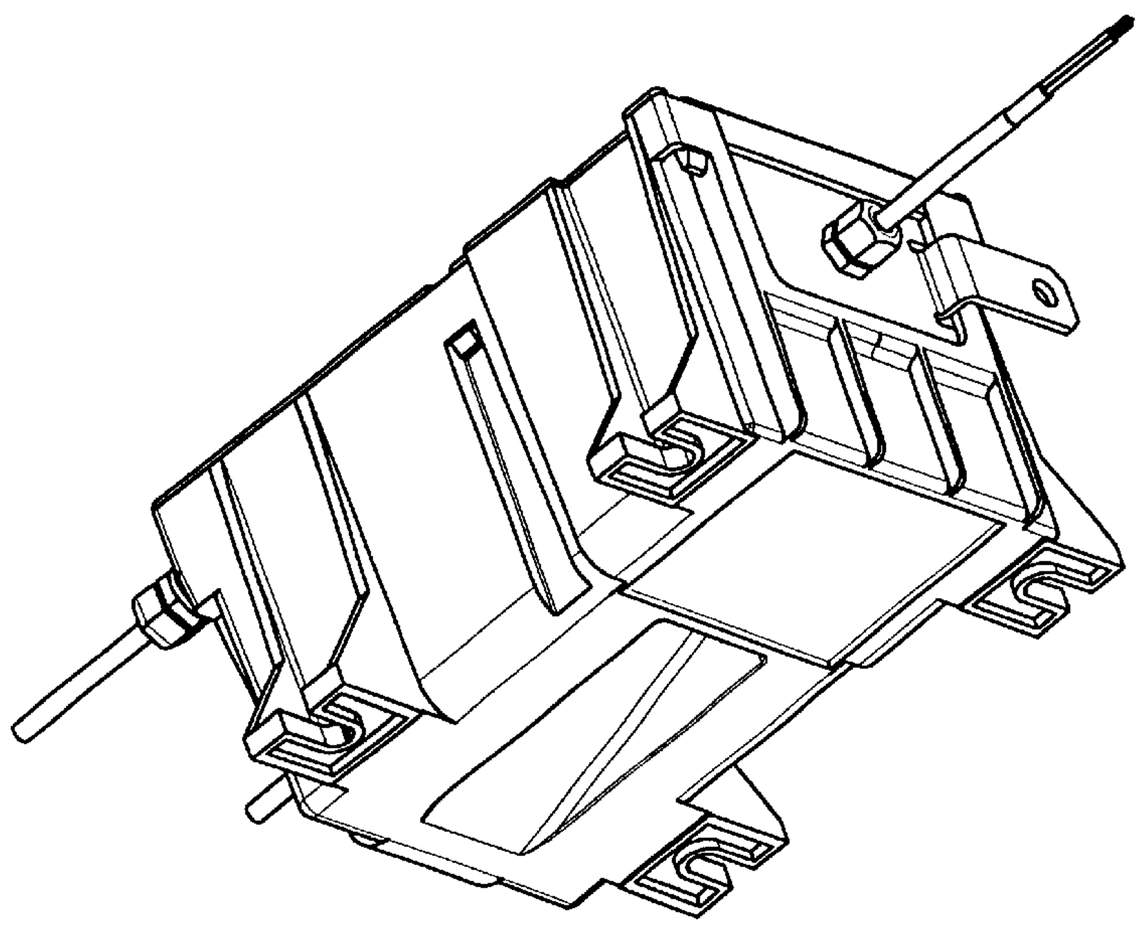

Fig. 18

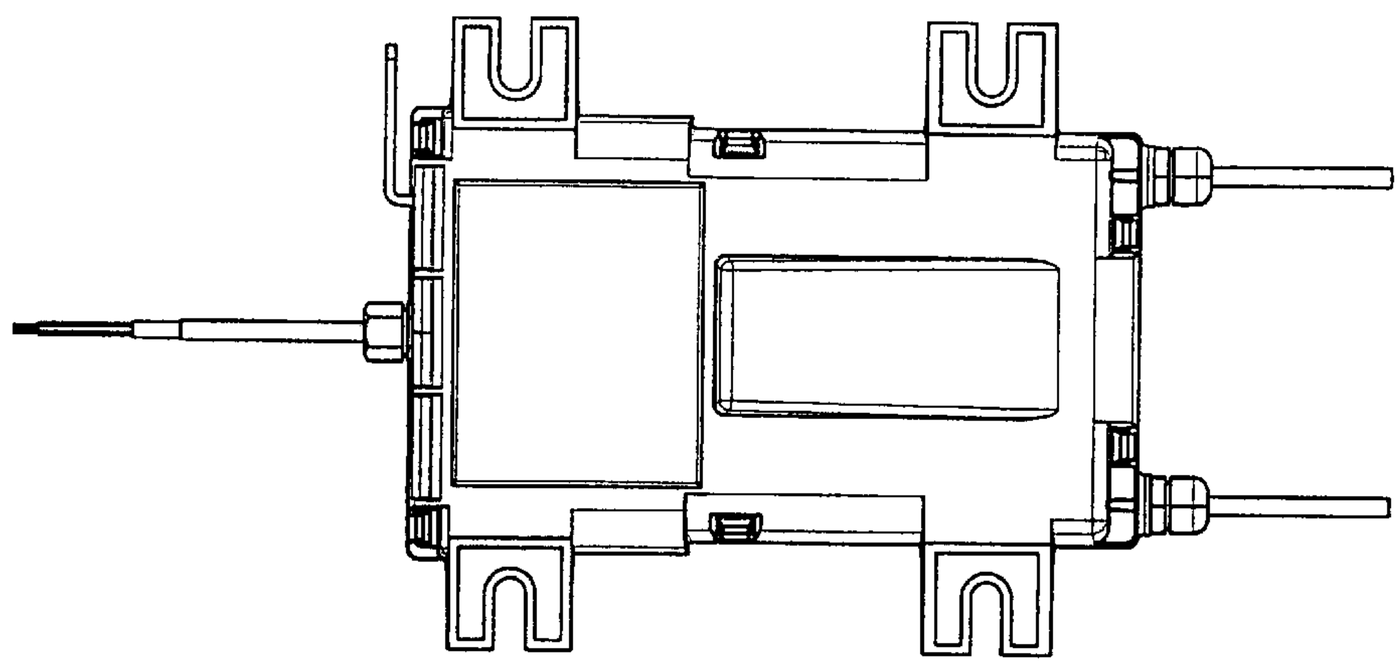

Fig. 19

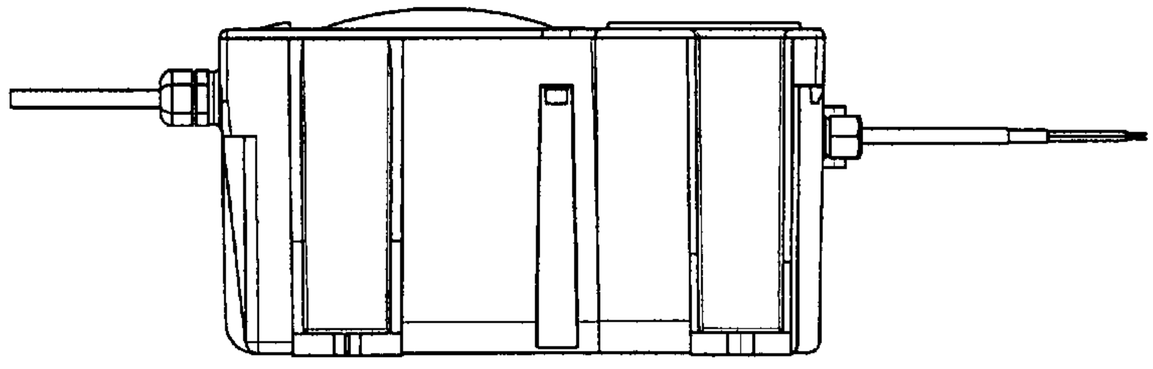

Fig. 20

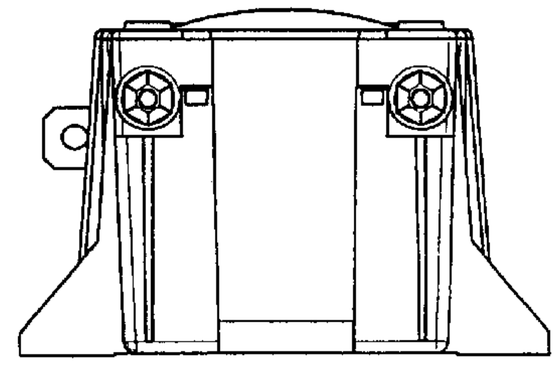

Fig. 21

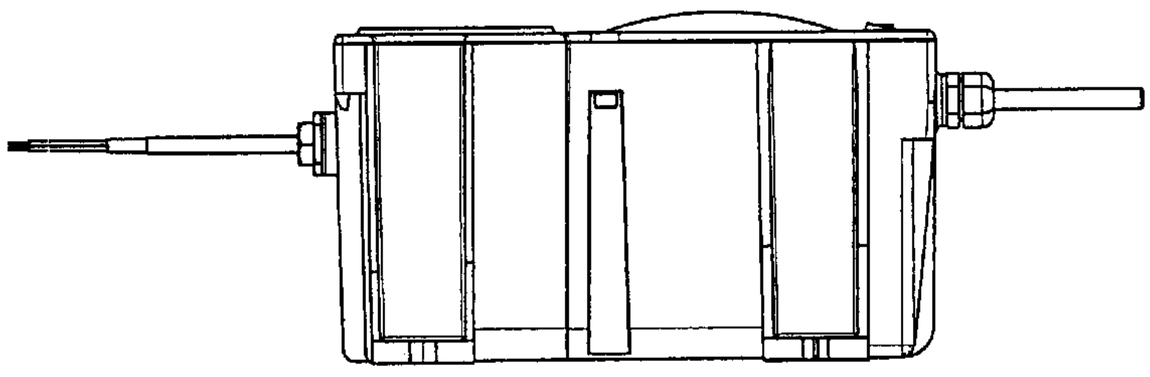

Fig. 22

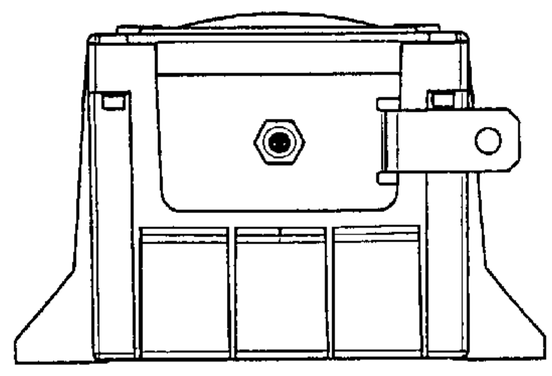

Fig. 23

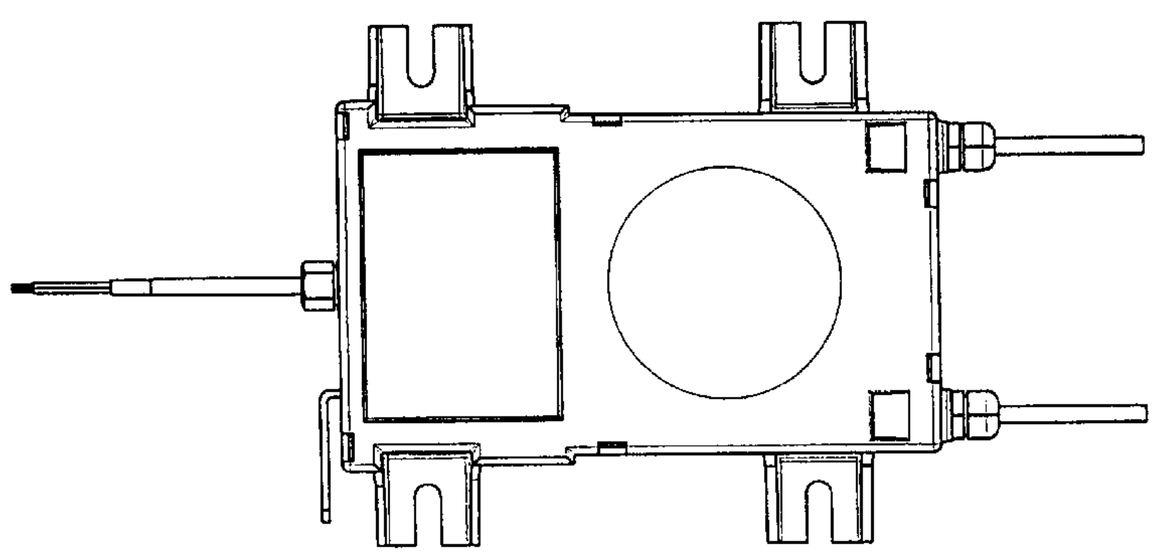

Fig. 24