US00D505661S

(12) United States Design Patent

Suenaga

(10) Patent No.: US D505,661 S
(45) Date of Patent: ** May 31, 2005

(54) **LIGHT EMITTING DIODE**

(75) Inventor: **Ryoma Suenaga**, Anan (JP)

(73) Assignee: **Nichia Corporation** (JP)

(**) Term: **14 Years**

(21) Appl. No.: **29/193,793**

(22) Filed: **Nov. 14, 2003**

(30) **Foreign Application Priority Data**

Jul. 9, 2003 (JP) 2003-019861
Jul. 9, 2003 (JP) 2003-019862
Jul. 9, 2003 (JP) 2003-019863
Jul. 9, 2003 (JP) 2003-019865
Jul. 9, 2003 (JP) 2003-019866
Jul. 9, 2003 (JP) 2003-019867
Jul. 9, 2003 (JP) 2003-019868
Jul. 9, 2003 (JP) 2003-019869
Jul. 9, 2003 (JP) 2003-019870

(51) **LOC (7) Cl.** **13-03**
(52) **U.S. Cl.** **D13/180**
(58) **Field of Search** D13/180, 182; 257/76, 79, 88, 89, 93–99, 434, 676, 678, 687, 690, 698, 787; 313/498, 499, 500; 361/760, 820; 362/226, 241, 249, 250, 307, 555, 800

(56) **References Cited**

U.S. PATENT DOCUMENTS

4,214,251 A * 7/1980 Schairer 257/99
4,791,648 A * 12/1988 Vojak et al. 372/46
6,355,946 B1 * 3/2002 Ishinaga 257/98
6,393,698 B1 * 5/2002 Kuriyama et al. 29/883
6,483,623 B1 * 11/2002 Maruyama 398/182
6,495,861 B1 * 12/2002 Ishinaga 257/99
6,518,601 B2 * 2/2003 Wirth 257/98
D476,961 S * 7/2003 Horiuchi et al. D13/182
6,586,721 B2 * 7/2003 Estevez-Garcia 250/221
6,610,563 B1 * 8/2003 Waitl et al. 438/166
6,624,491 B2 * 9/2003 Waitl et al. 257/434
6,707,069 B2 * 3/2004 Song et al. 257/79
D491,899 S * 6/2004 Yagi D13/180

* cited by examiner

Primary Examiner—Stella Reid
Assistant Examiner—Selina Sikder
(74) *Attorney, Agent, or Firm*—Osha & May L.L.P.

(57) **CLAIM**

The ornamental design for a light emitting diode, as shown and described.

DESCRIPTION

FIG. **1** shows a front view of the design according to a first embodiment of the invention.
FIG. **2** shows a rear view of the design according to a first embodiment of the invention.
FIG. **3** shows a plan view of the design according to a first embodiment of the invention.
FIG. **4** shows a right side view of the design according to a first embodiment of the invention.
FIG. **5** shows a perspective view of the design according to a first embodiment of the invention; and,
FIG. **6** shows a perspective view of the design according to the second embodiment of the invention.
Unless otherwise mentioned the left side view of each embodiment is a mirror image of its corresponding right side view.
The bottom view of each embodiment is a mirror image of its corresponding plan view.
The different types of stippling show a contrast in materials.

1 Claim, 3 Drawing Sheets

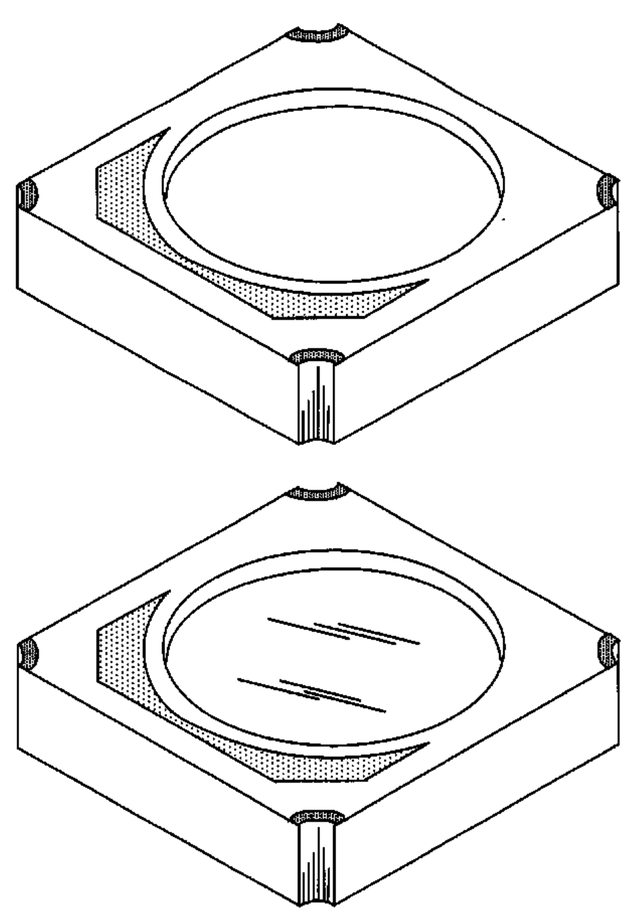

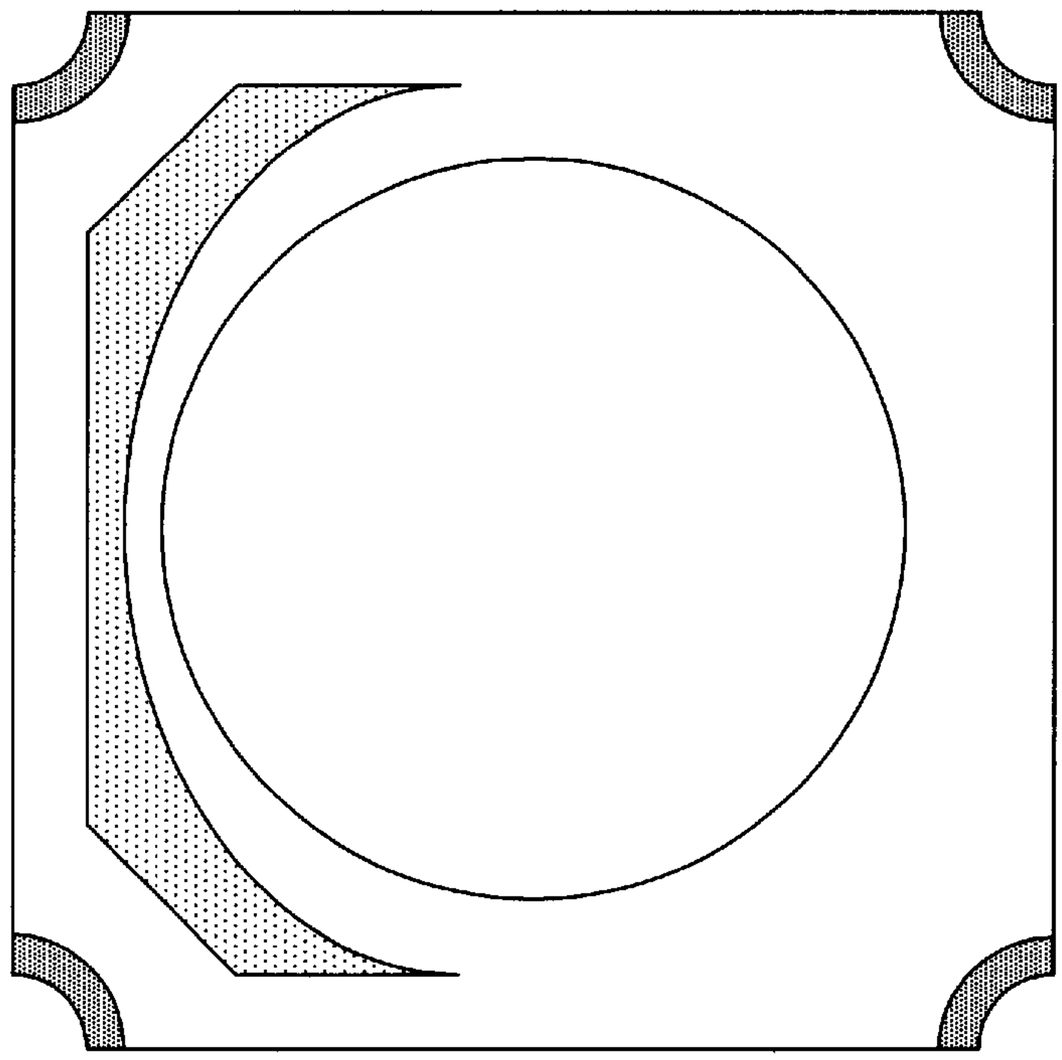

FIGURE 1

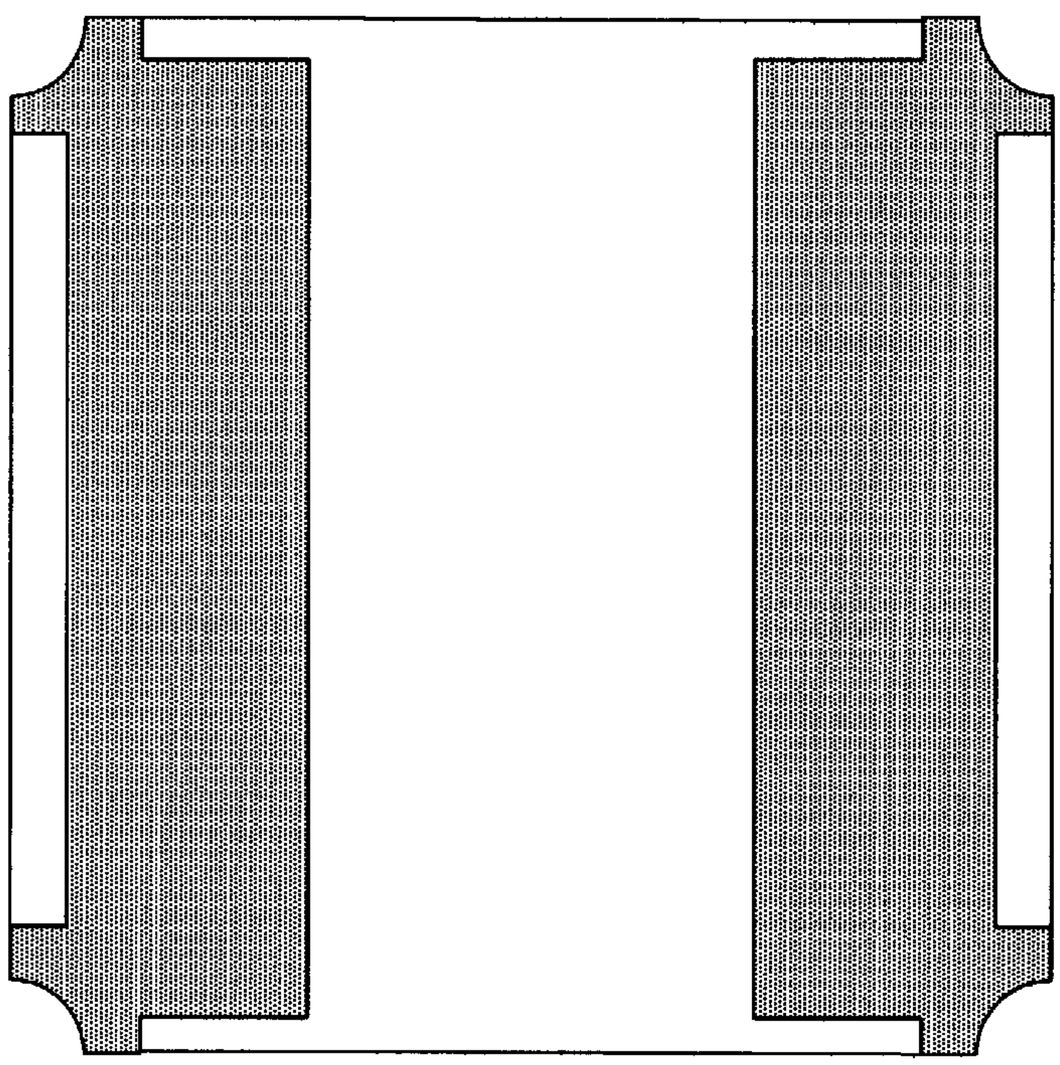

FIGURE 2

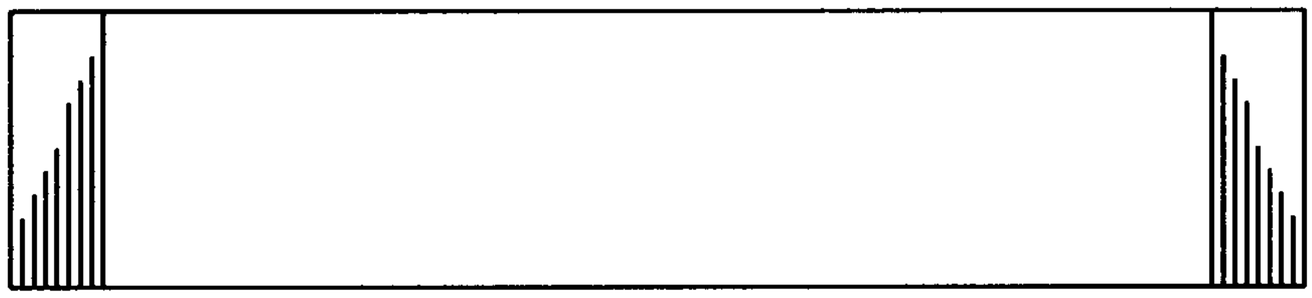

FIGURE 3

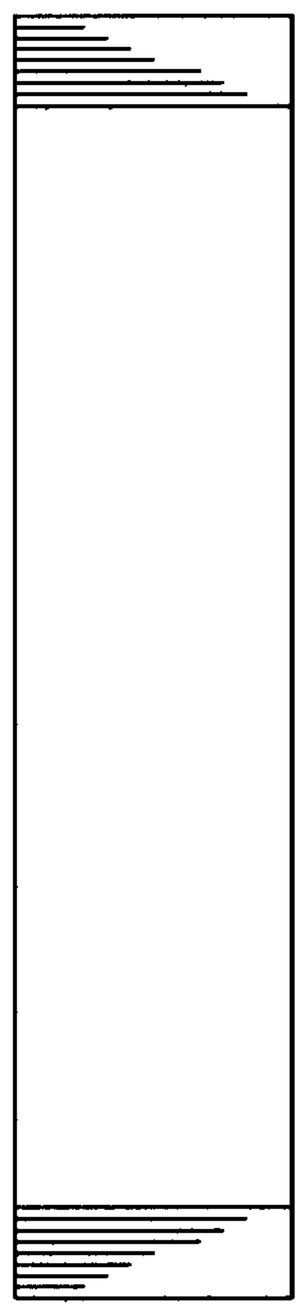

FIGURE 4

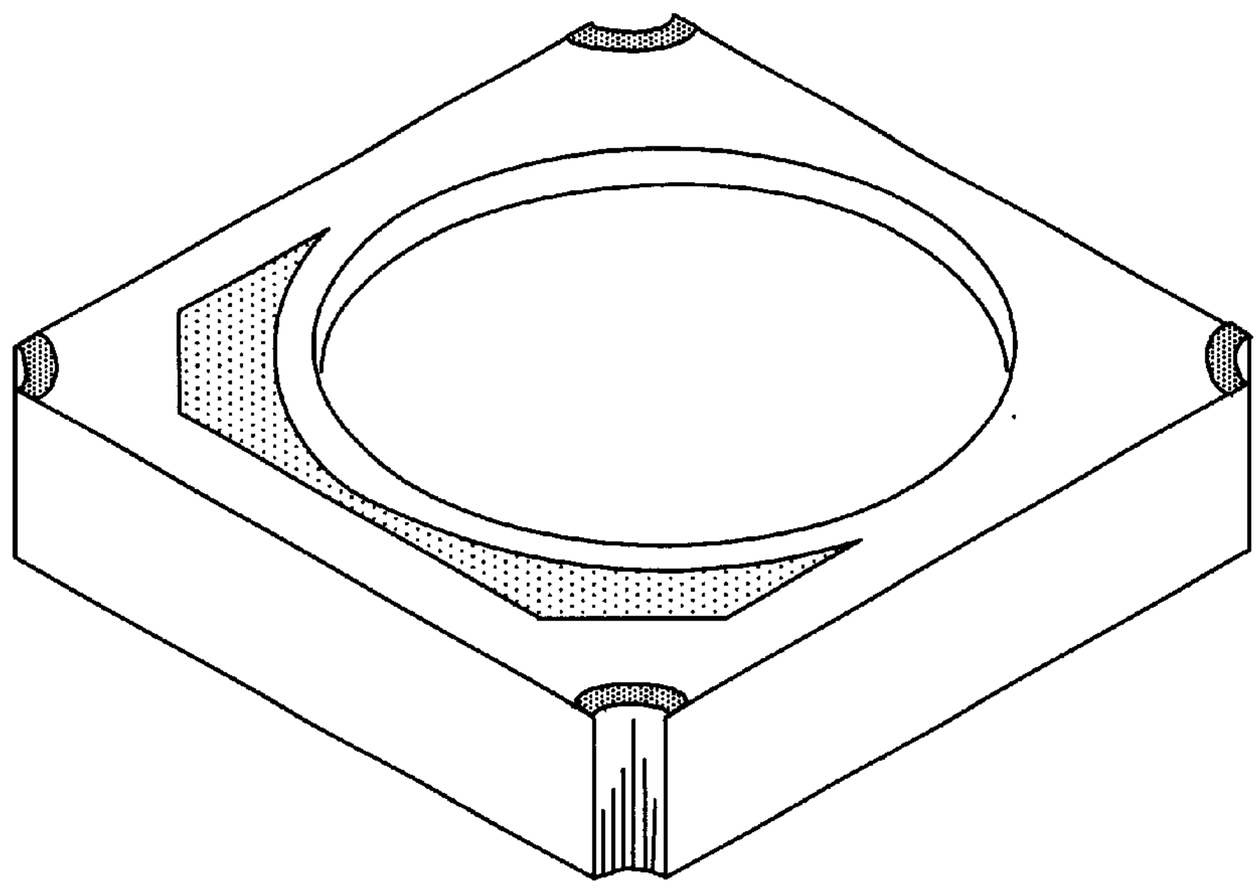

FIGURE 5

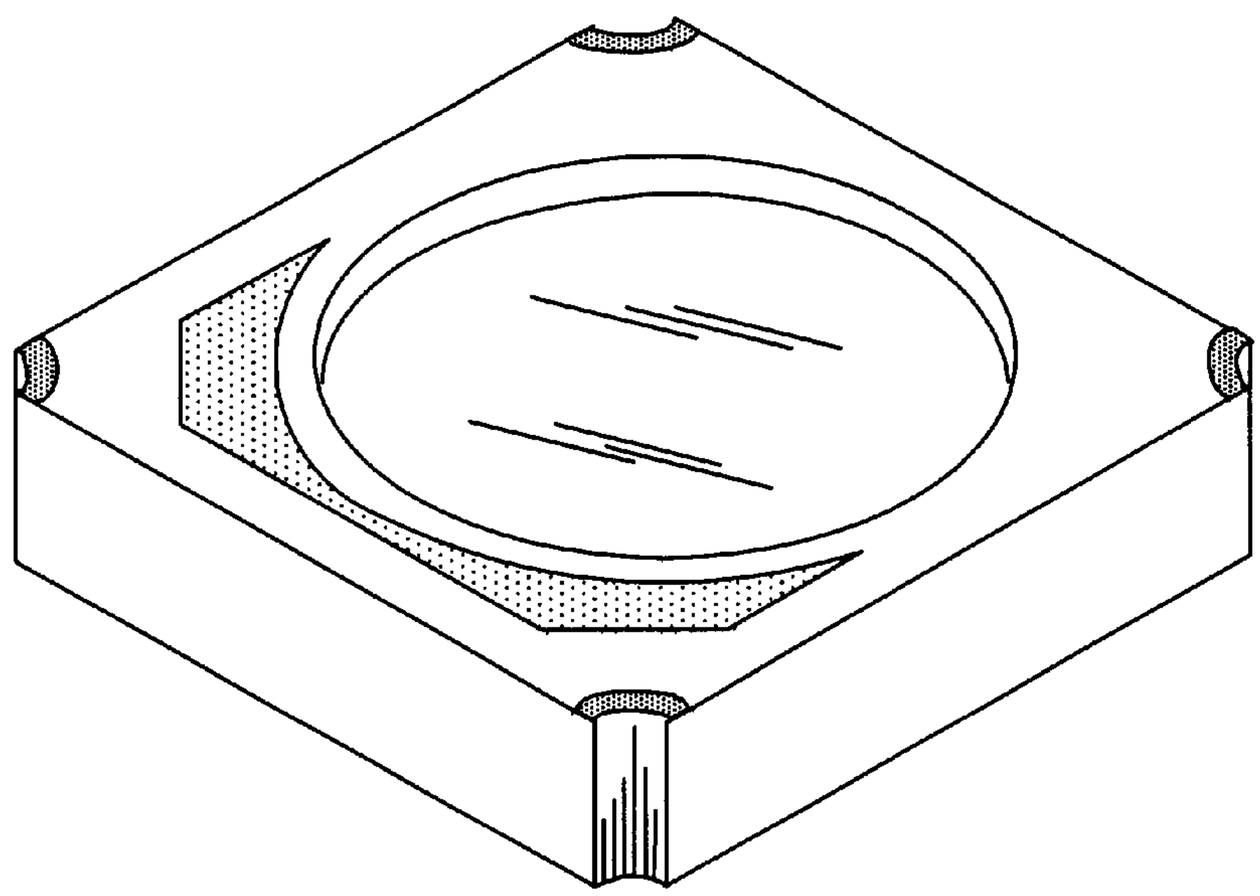

FIGURE 6