US00D504425S

(12) United States Design Patent

Ritson et al.

(10) Patent No.: US D504,425 S
(45) Date of Patent: ** Apr. 26, 2005

(54) **COMPUTER HOUSING**

(75) Inventors: **Nigel D. Ritson**, Aldershot (GB); **Paul J. Garnett**, Camberley (GB)

(73) Assignee: **Sun Microsystems, Inc.**, Santa Clara, CA (US)

(**) Term: **14 Years**

(21) Appl. No.: **29/172,887**

(22) Filed: **Dec. 18, 2002**

(30) **Foreign Application Priority Data**

Jun. 18, 2002 (GB) 3004564

(51) **LOC (7) Cl.** **14-02**
(52) **U.S. Cl.** **D14/300**
(58) **Field of Search** D14/300–313, D14/348–356, 367; 312/223.1; 361/683, 684, 687, 690, 695, 724–730, 796

(56) **References Cited**

U.S. PATENT DOCUMENTS

3,710,199 A * 1/1973 Cignoni, Jr. ..... 361/727 X
4,012,089 A * 3/1977 Ward 312/236
6,570,770 B1 * 5/2003 Erskine et al. ..... 361/796 X
2002/0167796 A1 * 11/2002 Page et al. 361/690
2003/0030977 A1 * 2/2003 Garnett et al. 361/687
2003/0123222 A1 * 7/2003 Thompson et al. 361/690

* cited by examiner

Primary Examiner—Alan P. Douglas
(74) *Attorney, Agent, or Firm*—Meyertons Hood Kivlin Kowert & Goetzel, PC; B. Noël Kivlin

(57) **CLAIM**

The ornamental design for a computer housing, as shown and described.

DESCRIPTION

FIG. **1** is a front perspective view from above and one side of a computer housing.
FIG. **2** is a rear perspective view from below and other side of a computer housing.
FIG. **3** is a plan view of a computer housing
FIG. **4** is an underneath plan view of a computer housing.
FIG. **5** is a side view of a computer housing.
FIG. **6** is an other side view of a computer housing.
FIG. **7** is a front view of a computer housing; and,
FIG. **8** is a rear view of a computer housing.

1 Claim, 3 Drawing Sheets

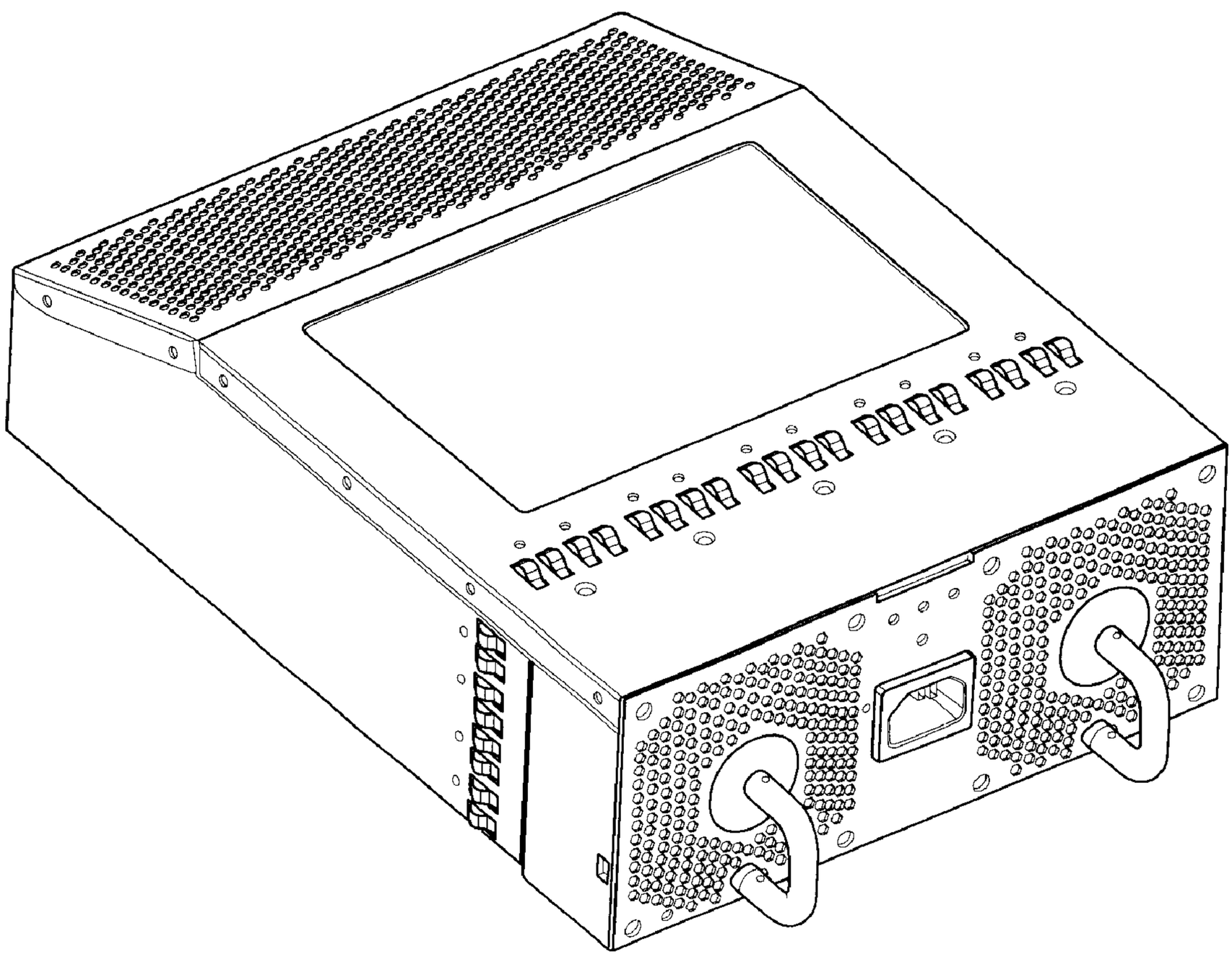

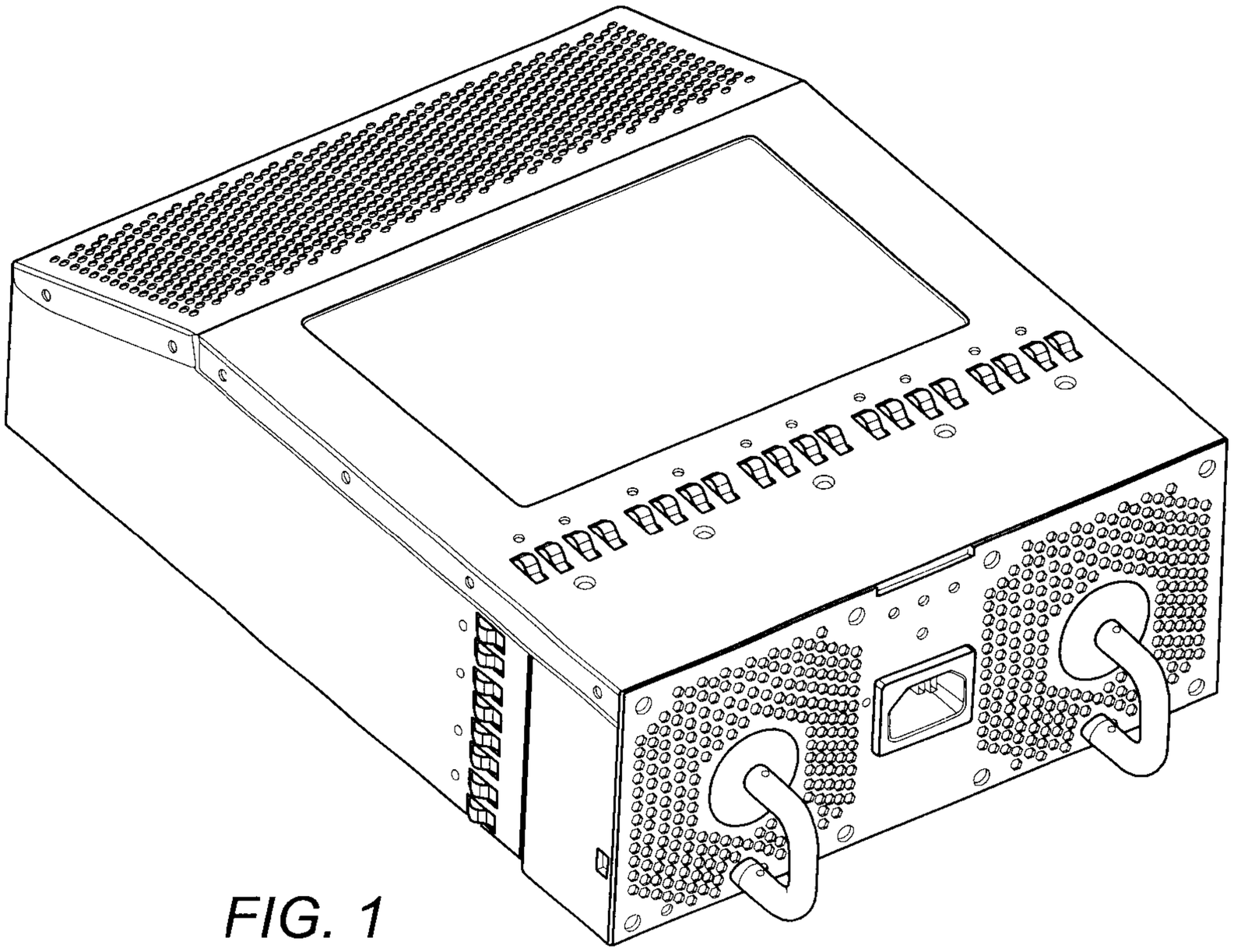

FIG. 1

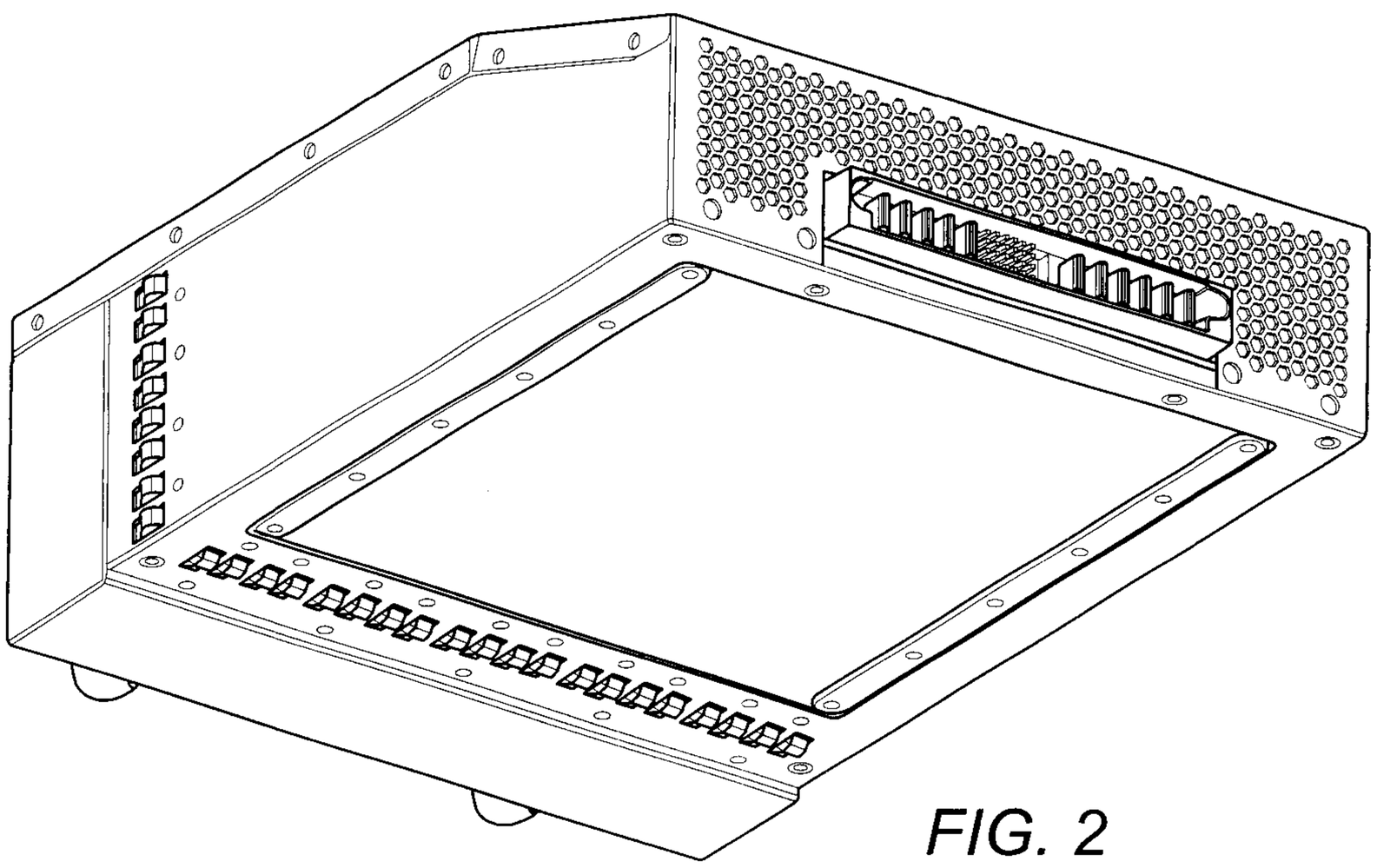

FIG. 2

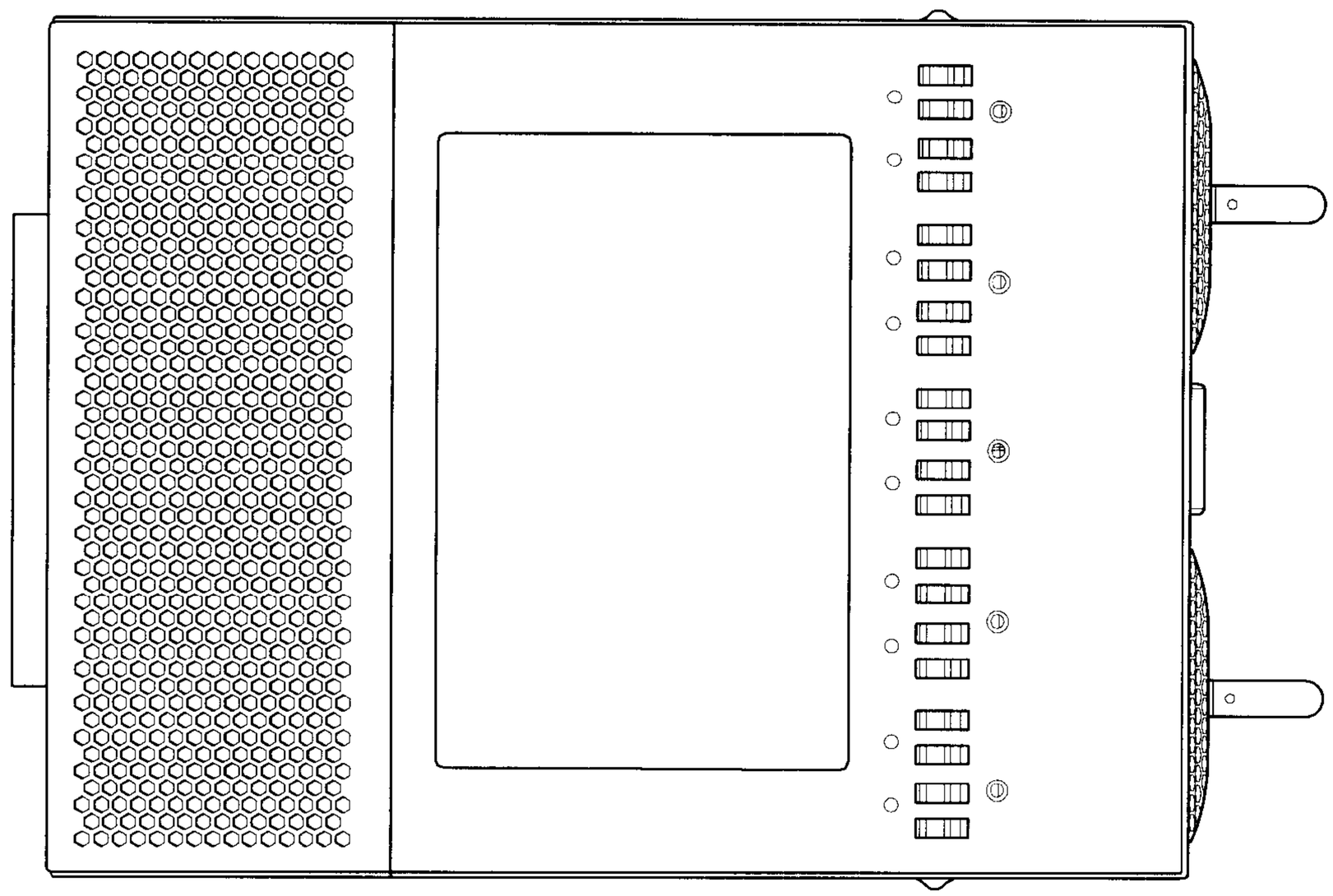

FIG. 3

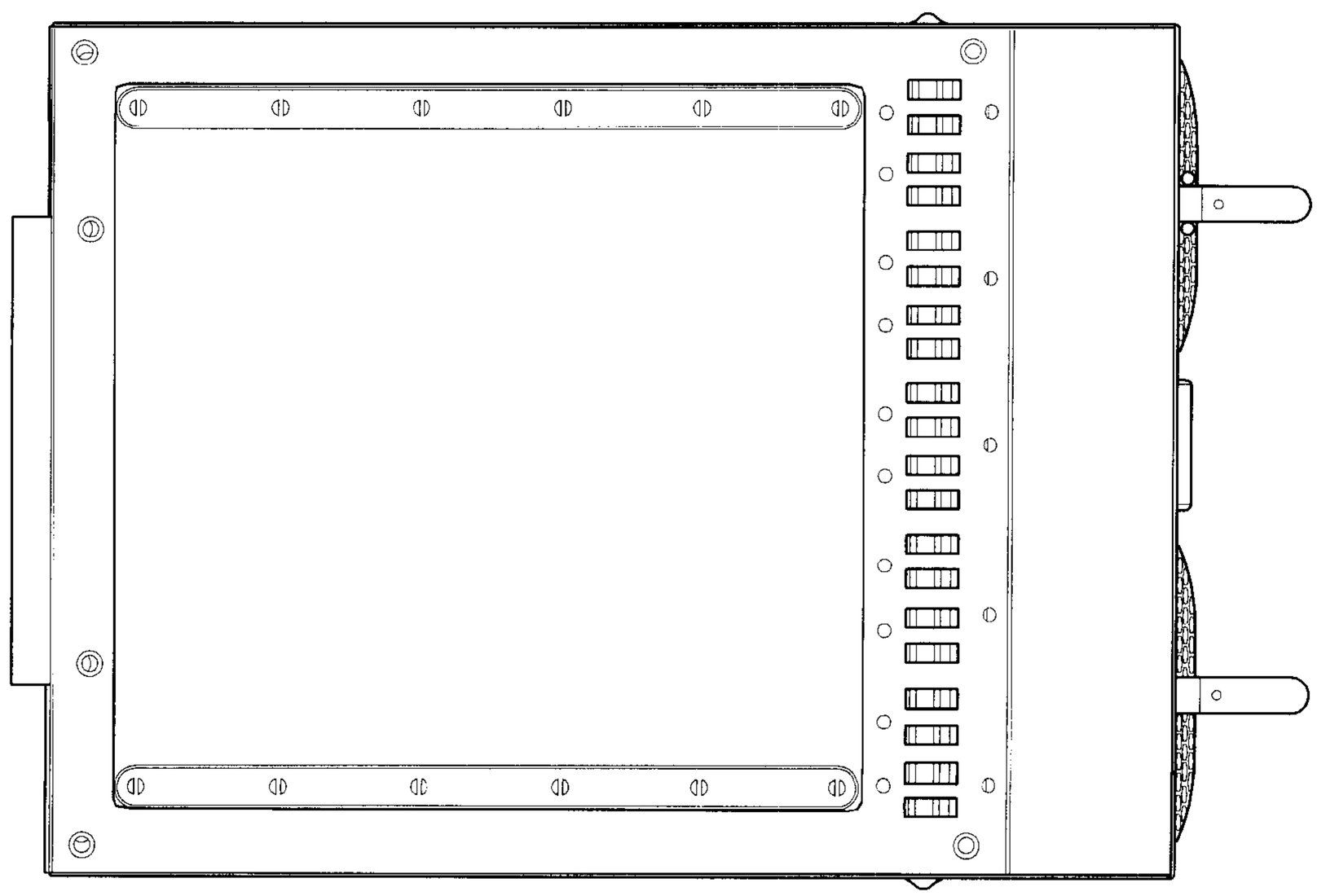

FIG. 4

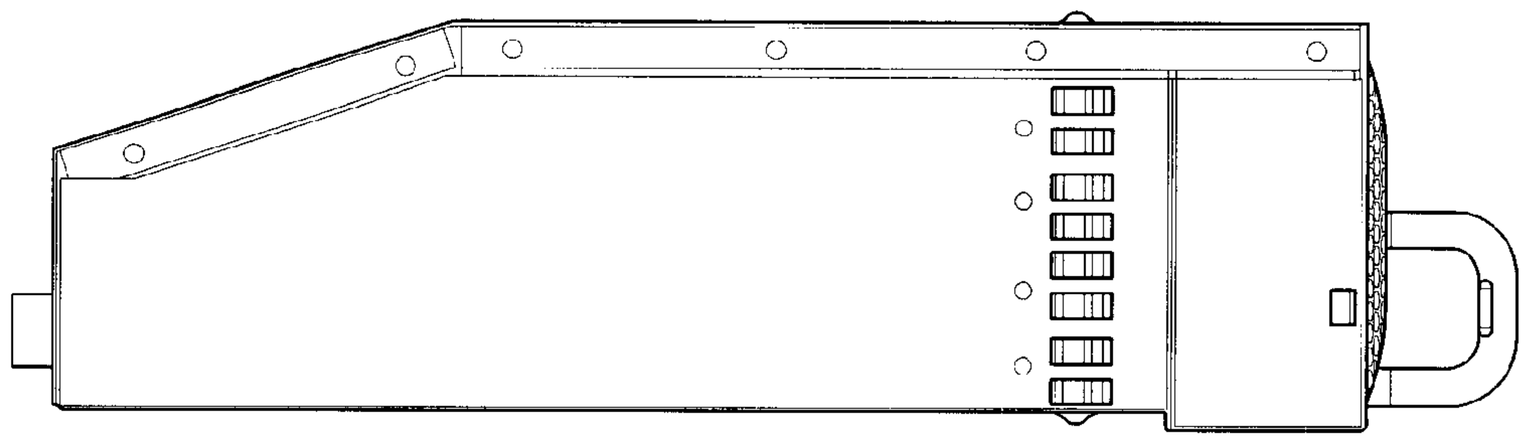

FIG. 5

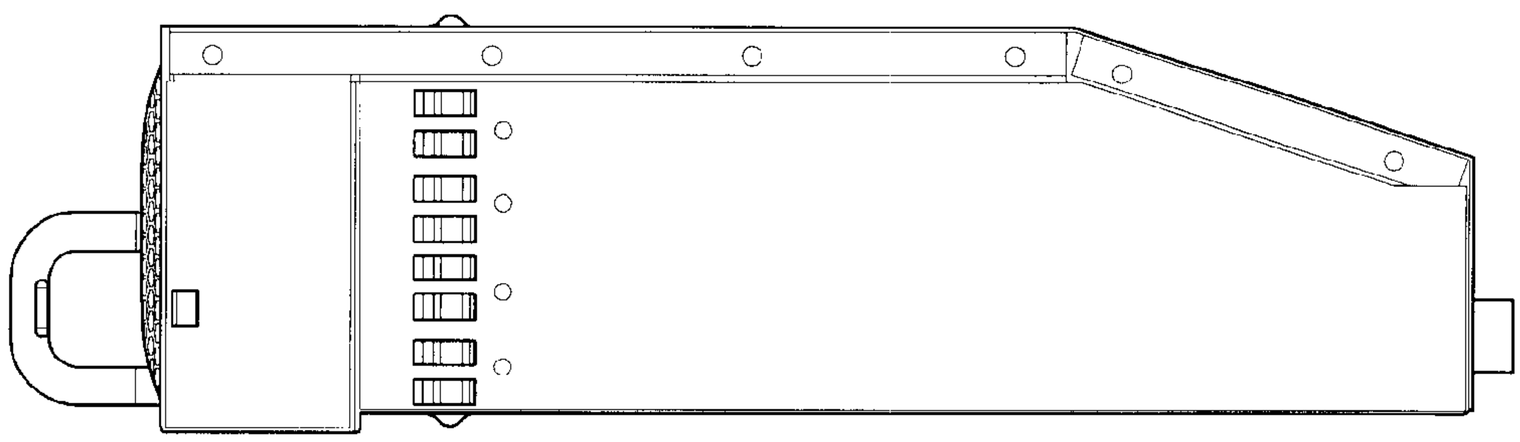

FIG. 6

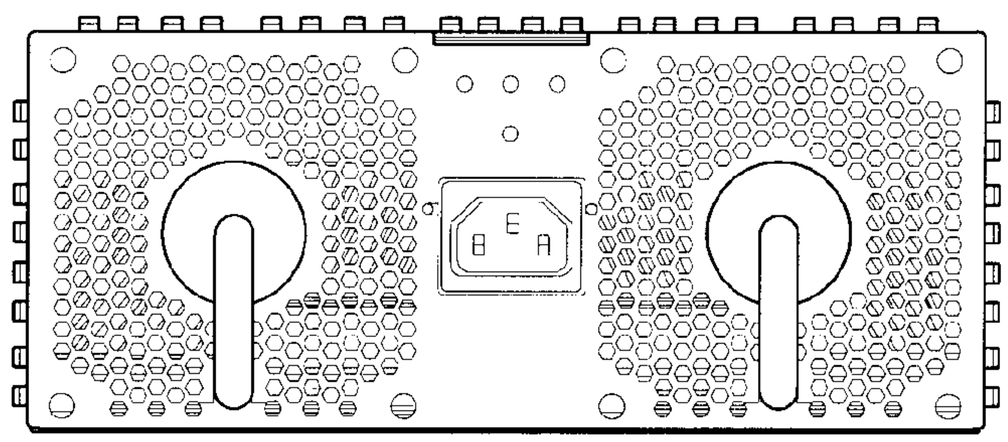

FIG. 7

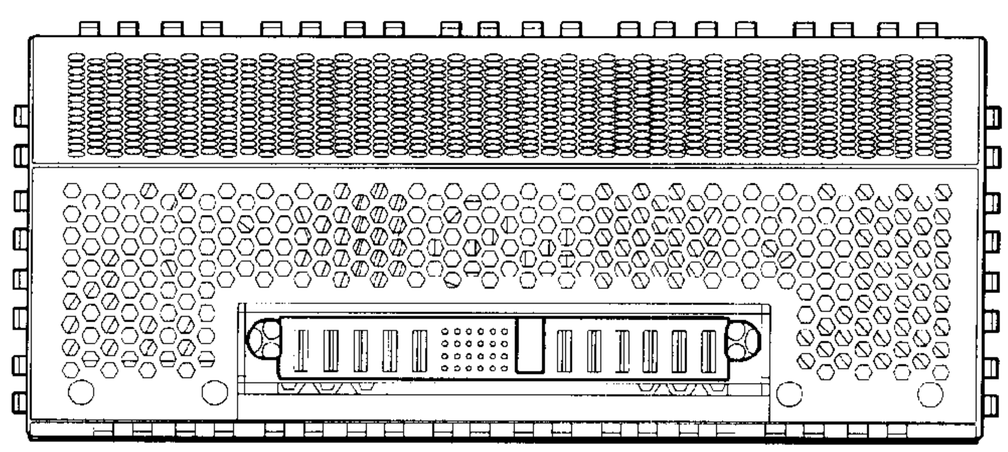

FIG. 8