US00D502857S

(12) United States Design Patent

Sato

(10) Patent No.: US D502,857 S
(45) Date of Patent: ** Mar. 15, 2005

(54) **LEVER HANDLE FOR FITTINGS**

(75) Inventor: **Genichi Sato**, Ageo (JP)

(73) Assignee: **Sugatsune Kogyo Co., Ltd.**, Tokyo (JP)

(**) Term: **14 Years**

(21) Appl. No.: **29/191,201**

(22) Filed: **Oct. 2, 2003**

(30) **Foreign Application Priority Data**

Apr. 4, 2003 (JP) 2003-009514

(51) **LOC (7) Cl.** **08-06**
(52) **U.S. Cl.** **D8/308**
(58) **Field of Search** D8/301, 306, 308; D7/393; D23/250–254; 16/412, 110.1; 74/519, 523, 548; 292/173, 336.3, 356

(56) **References Cited**

U.S. PATENT DOCUMENTS

D99,309 S * 4/1936 Ruppel D8/308
D216,219 S * 12/1969 Jacobson D7/393
D271,561 S * 11/1983 Valli D8/308
D312,956 S * 12/1990 Boeri D8/308
D323,101 S * 1/1992 Holscher D8/301
D435,423 S * 12/2000 Rodriguez et al. D8/308

* cited by examiner

Primary Examiner—Paula A. Greene
(74) *Attorney, Agent, or Firm*—Osha & May L.L.P.

(57) **CLAIM**

The ornamental design for a lever handle for fittings, as shown and described.

DESCRIPTION

FIG. **1** shows a front view of the design according to an embodiment of the invention.
FIG. **2** shows a top plan view of the design according to an embodiment of the invention.
FIG. **3** shows a rear view of the design according to an embodiment of the invention.
FIG. **4** shows a right side view of the design according to an embodiment of the invention.
FIG. **5** shows a left side view of the design according to an embodiment of the invention; and,
FIG. **6** shows a sectional view of the design according to an embodiment of the invention taken along the line **6—6** as shown in FIG. **2**.
The bottom plan view is a mirror image of the top plan view as shown in FIG. **2**.

1 Claim, 2 Drawing Sheets

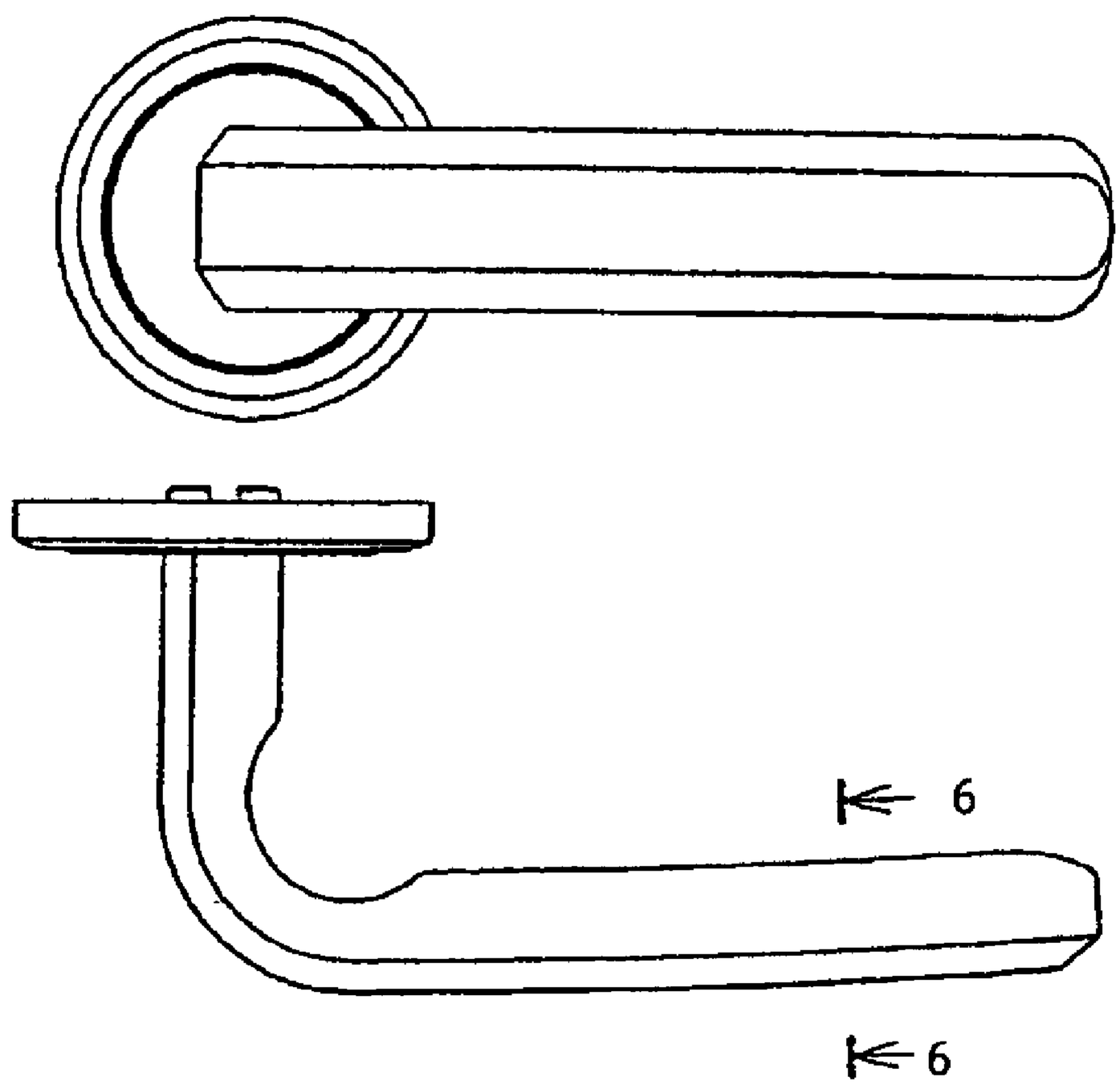

FIG. 1

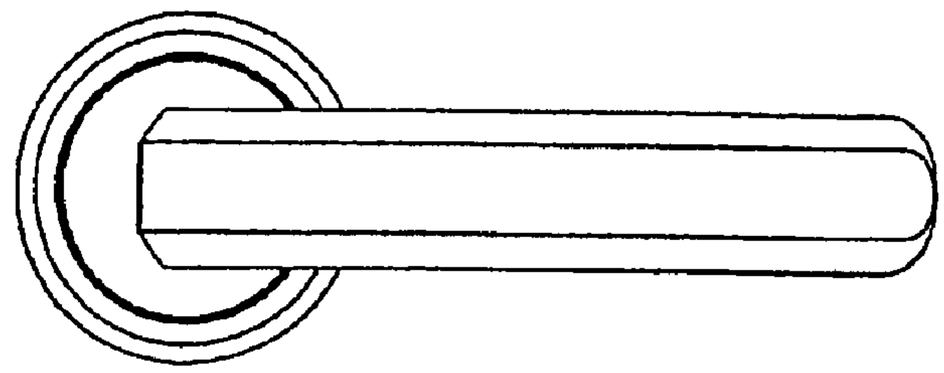

FIG. 2

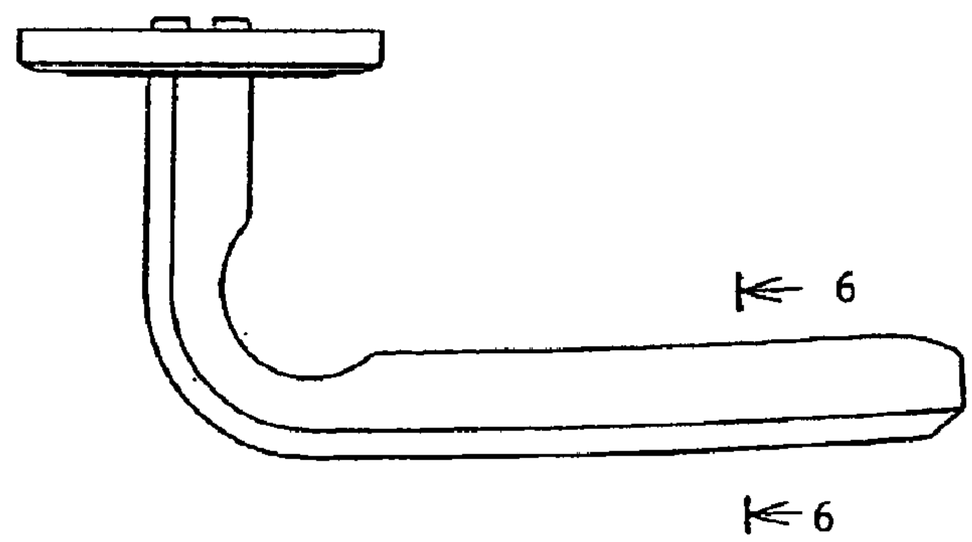

FIG. 3

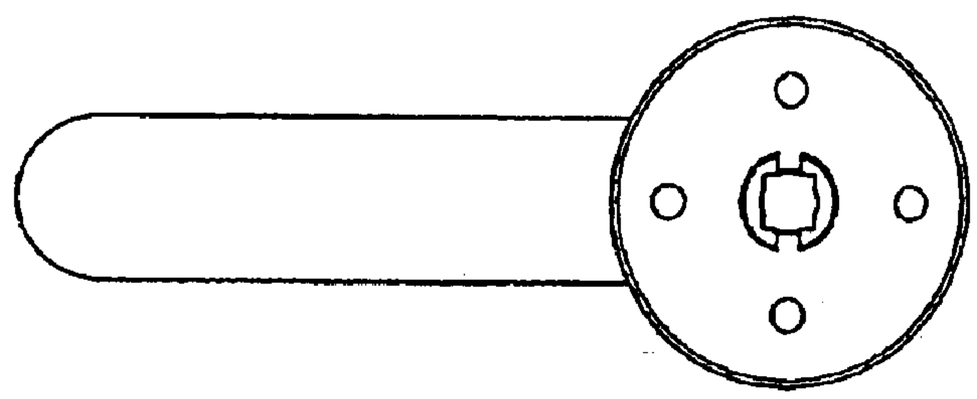

FIG. 4

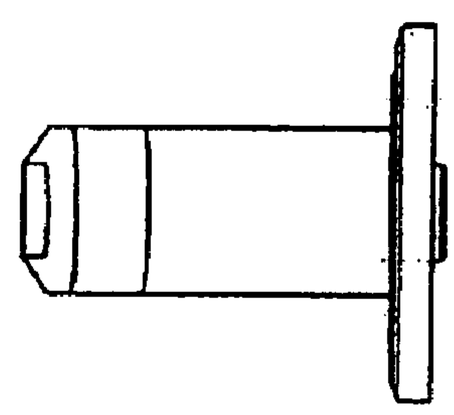

FIG. 5

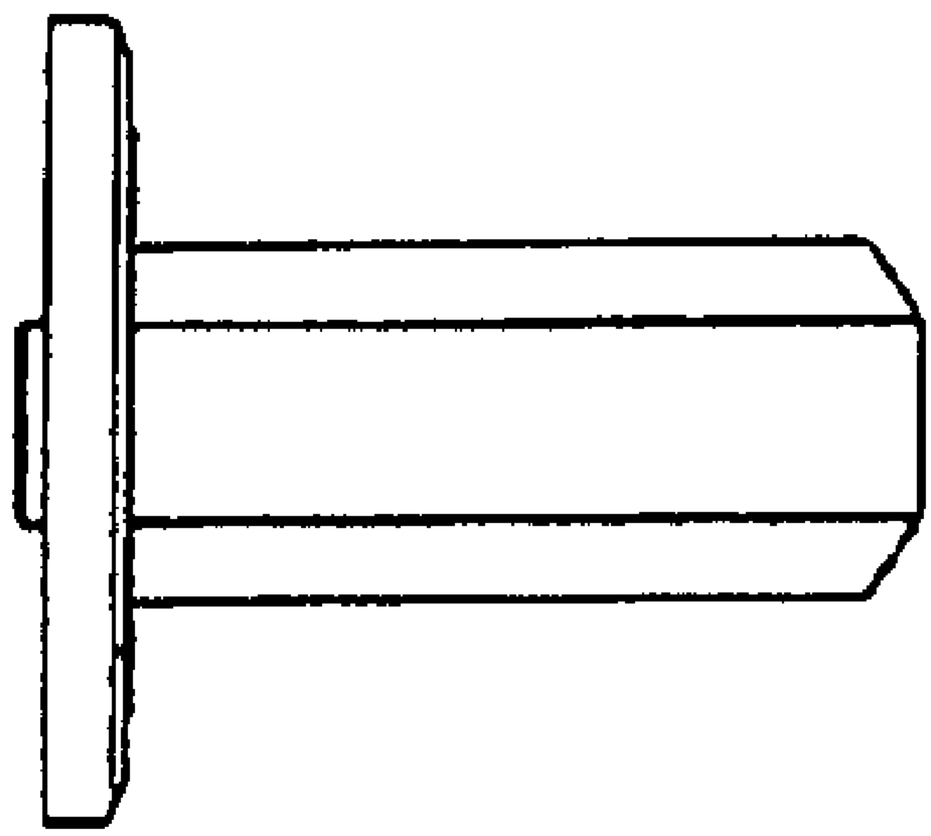
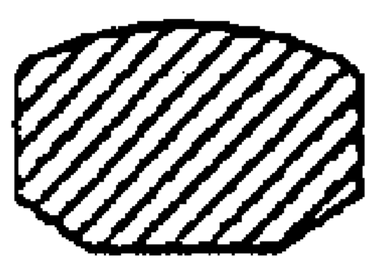
FIG. 6