US00D493797S1

(12) United States Design Patent

Dearborn et al.

(10) Patent No.: US D493,797 S
(45) Date of Patent: ** Aug. 3, 2004

(54) **COMPUTER SYSTEM STATUS DISPLAY**

(75) Inventors: **Timothy C. Dearborn**, Austin, TX (US); **Shawn P. Hoss**, Round Rock, TX (US)

(73) Assignee: **Dell Products, L.P.**, Round Rock, TX (US)

(**) Term: **14 Years**

(21) Appl. No.: **29/195,114**

(22) Filed: **Dec. 5, 2003**

Related U.S. Application Data

(62) Division of application No. 29/178,601, filed on Mar. 28, 2003, now Pat. No. Des. 485,842, which is a division of application No. 29/143,122, filed on Jun. 7, 2001, now Pat. No. Des. 476,009.

(51) **LOC (7) Cl.** **14-02**
(52) **U.S. Cl.** **D14/432**
(58) **Field of Search** D14/441–446, D14/239, 371, 432; D13/162, 184, 199; 312/223.2; 361/680–686, 690–696; 340/691.1

(56) **References Cited**

U.S. PATENT DOCUMENTS

D360,411	S		7/1995	Sharp et al.	D14/115
5,519,832	A		5/1996	Warchol	395/183.22
5,880,955	A		3/1999	Matoba et al.	364/188
D411,178	S		6/1999	Ikenaga	D14/100
D412,497	S		8/1999	Lai	D14/115
5,954,827	A		9/1999	Frank et al.	714/48
D416,009	S		11/1999	Lai	D14/115
5,995,012	A		11/1999	Lee et al.	340/815.45
D431,243	S		9/2000	Oba	D14/351
D432,134	S		10/2000	Leman	D14/441
D435,559	S		12/2000	Tanaka	D14/444
D436,952	S		1/2001	Goto	D14/349
D436,953	S		1/2001	Matsuoka	D14/349
D437,325	S		2/2001	Searby et al.	D14/445
D440,572	S		4/2001	Jean et al.	D14/445
D476,009	S	*	6/2003	Dearborn et al.	D14/432
D485,842	S	*	1/2004	Dearborn et al.	D14/432

* cited by examiner

Primary Examiner—Freda S. Nunn
(74) *Attorney, Agent, or Firm*—Baker Botts L.L.P.

(57) **CLAIM**

The ornamental design for a computer system status display, as shown and described.

DESCRIPTION

This application is related to U.S. utility patent application titled "System and Method for Displaying Computer System Status Information" by Timothy C. Dearborn and Shawn P. Hoss, U.S. Application Serial No. 09/876,594, which is pending herewith and which is incorporated herein by reference in its entirety for all purposes.

FIG. **1** is a front elevational view of a computer system status display; and,

FIG. **2** is a perspective view of the computer system status display wherein the computer system is shown in broken lines for illustrative purposes only and forms no part of the claimed design.

1 Claim, 2 Drawing Sheets

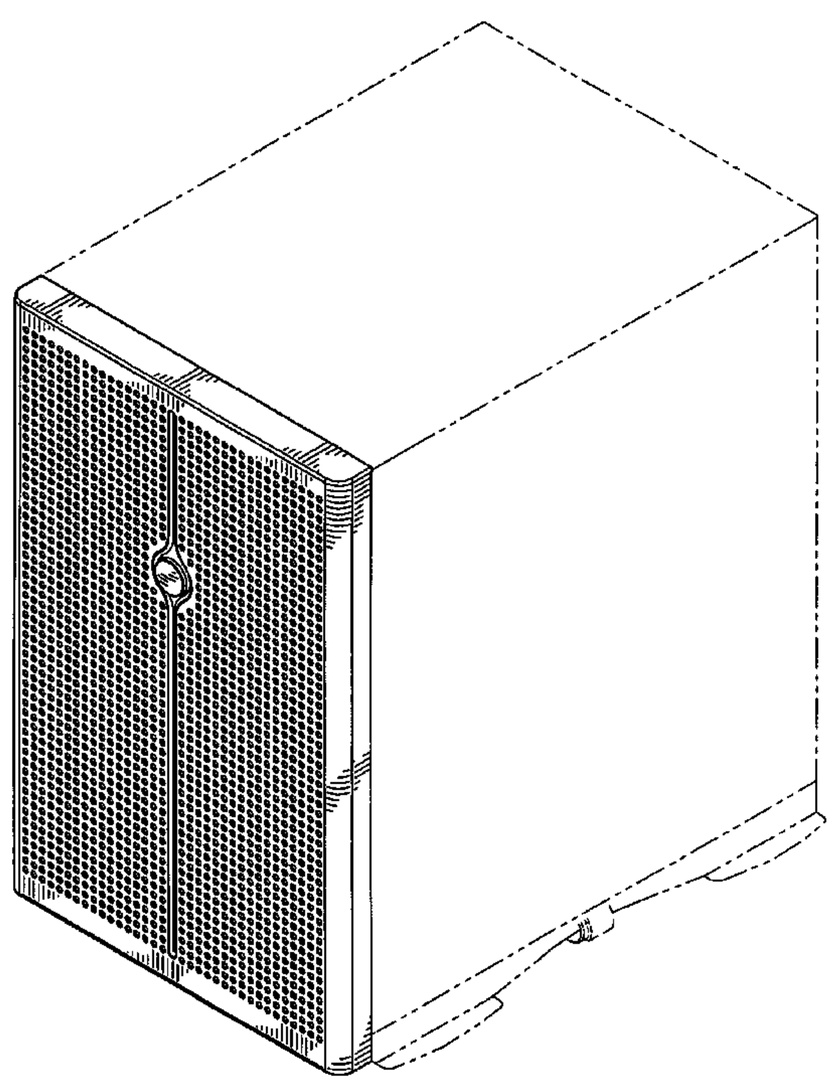

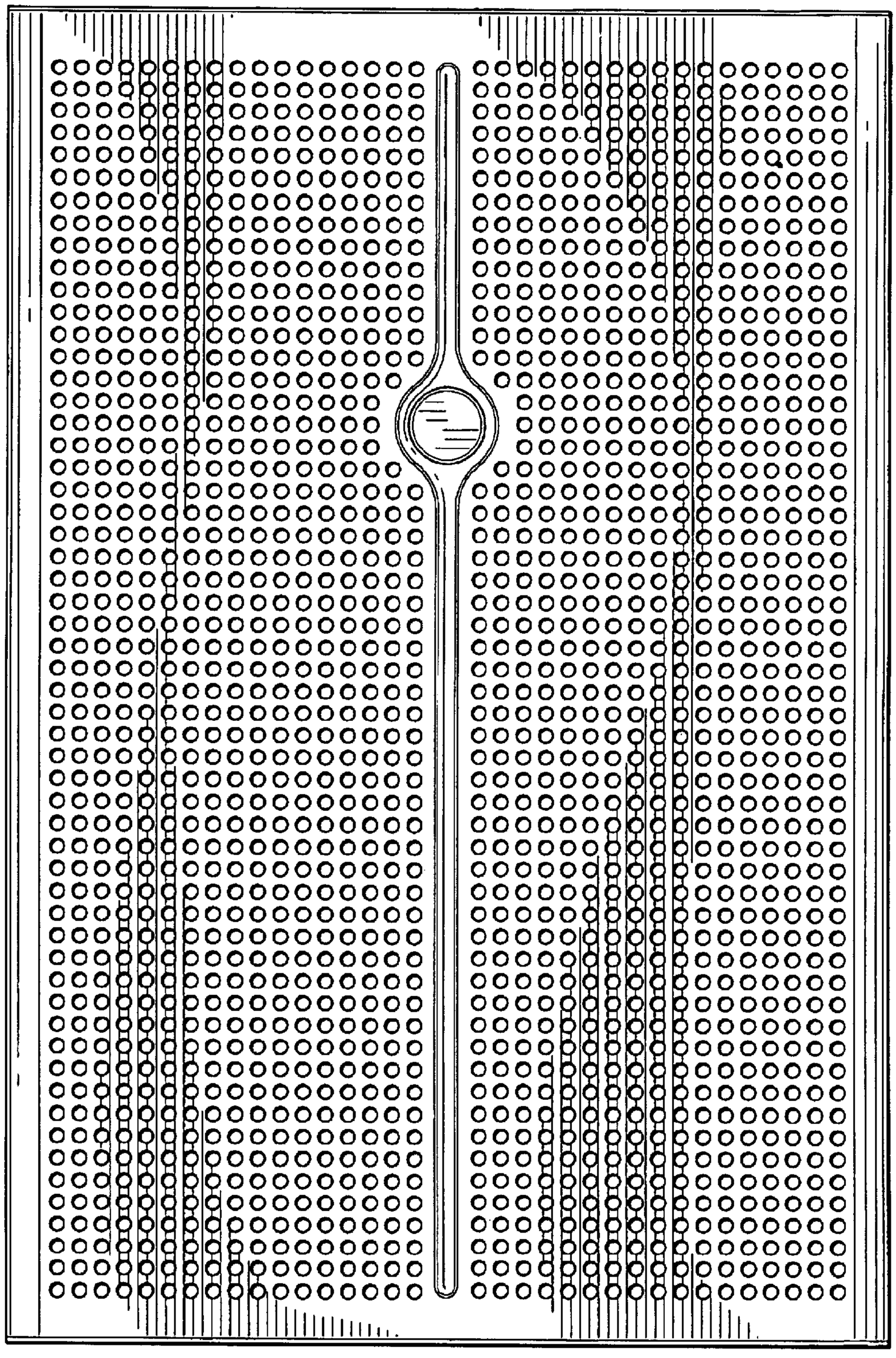

FIG. 1

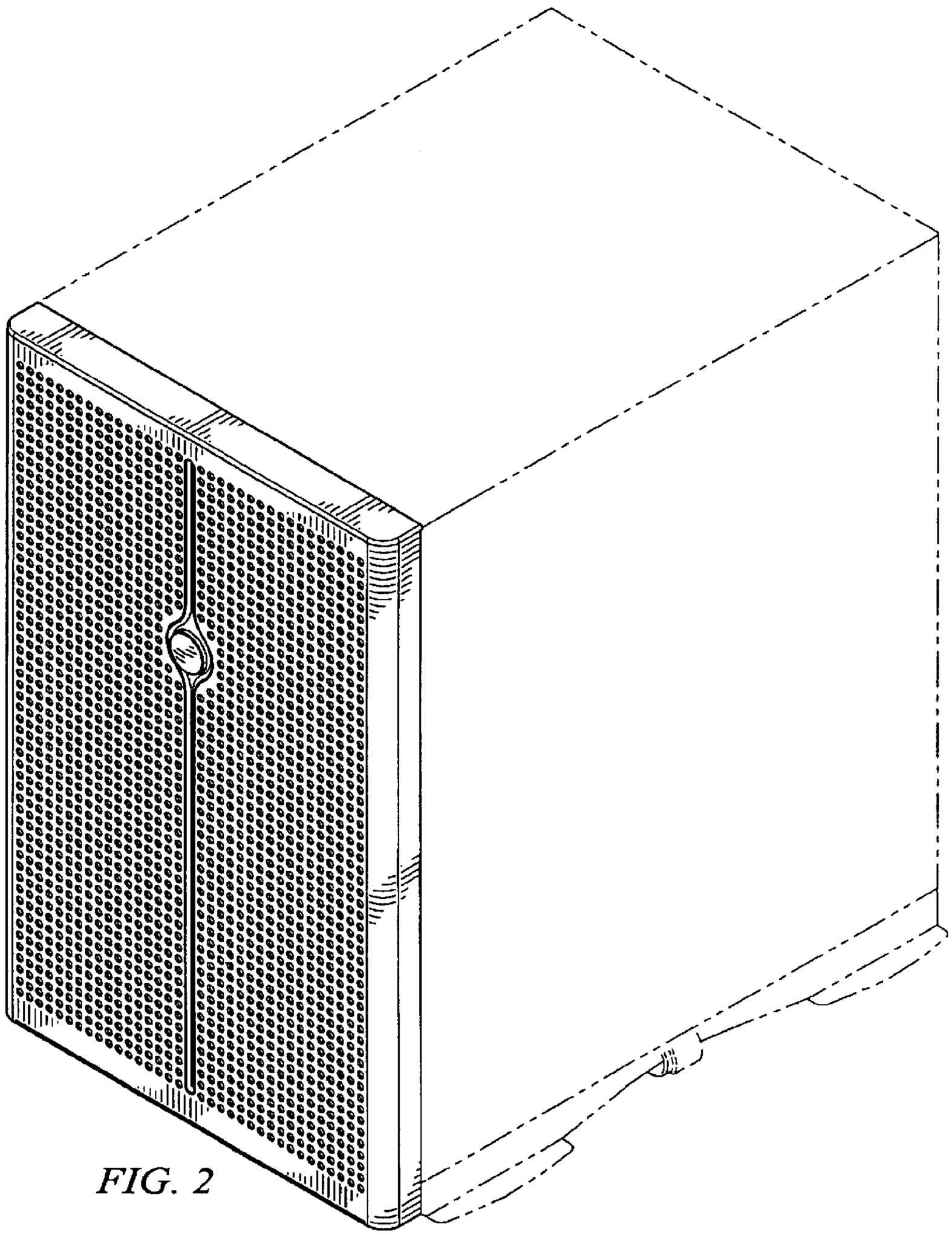

FIG. 2