US00D492773S1

(12) United States Design Patent

Ellingboe et al.

(10) Patent No.: US D492,773 S
(45) Date of Patent: ** Jul. 6, 2004

(54) **FEMALE CONNECTOR IN A PATIENT TEMPERATURE CONTROL SYSTEM**

(75) Inventors: **Bruce Ellingboe**, Littleton, CO (US); **Michael R. Hoglund**, Mead, CO (US); **Gary A. Carson**, Golden, CO (US)

(73) Assignee: **Medivance Incorporated**, Louisville, CO (US)

(**) Term: **14 Years**

(21) Appl. No.: **29/165,348**

(22) Filed: **Aug. 8, 2002**

(51) **LOC (7) Cl.** **24-02**
(52) **U.S. Cl.** **D24/129**
(58) **Field of Search** D24/129, 127, D24/206; D13/133; 607/104, 107, 109, 114, 108; 439/272, 282

(56) **References Cited**

U.S. PATENT DOCUMENTS

998,804	A	7/1911	Salisbury	
2,224,876	A	12/1940	Matys	34/26
2,250,325	A	7/1941	Barnes	257/12
2,416,788	A	3/1947	Andrews	34/99
2,566,600	A	9/1951	Colon	128/65
2,726,658	A	12/1955	Chessey	128/400
3,064,649	A	11/1962	Fuson	128/214
3,460,538	A	8/1969	Armstrong	128/303.1
3,504,674	A	4/1970	Swenson et al.	128/303.1
3,824,524	A *	7/1974	Glover	439/282
3,894,213	A	7/1975	Agarwala	219/297
4,118,946	A	10/1978	Tubin	62/514
4,149,529	A	4/1979	Copeland et al.	128/24.1
T994,001	I4	5/1980	Buckberg et al.	128/214
4,259,961	A	4/1981	Hood, III	128/400
4,304,213	A	12/1981	Jereckos	607/104
4,338,944	A	7/1982	Arkans	128/400
4,416,280	A	11/1983	Carpenter et al.	128/399
4,427,009	A	1/1984	Wells et al.	128/400
4,459,468	A	7/1984	Bailey	219/490

(List continued on next page.)

Primary Examiner—Ian Simmons
(74) *Attorney, Agent, or Firm*—Marsh Fischmann & Breyfogle LLP

(57) **CLAIM**

The ornamental design for a female connector in a patient temperature control system, as shown and described.

DESCRIPTION

FIG. **1** is a perspective view of one side of the female connector in a patient temperature control system;
FIG. **2** is a front view of the female connector in a patient temperature control system;
FIG. **3** is a back view of the female connector in a patient temperature control system;
FIG. **4** is a right side view of the female connector in a patient temperature control system;
FIG. **5** is a left side view of the female connector in a patient temperature control system;
FIG. **6** is a top view of the female connector in a patient temperature control system;
FIG. **7** is a bottom view of the female connector in a patient temperature control system;
FIG. **8** is a perspective view of a second embodiment of the female connector in a patient temperature control system;
FIG. **9** is a front view of a second embodiment of the female connector in a patient temperature control system;
FIG. **10** is a back view of a second embodiment of the female connector in a patient temperature control system;
FIG. **11** is a right side view of a second embodiment of the female connector in a patient temperature control system;
FIG. **12** is a left side view of a second embodiment of the female connector in a patient temperature control system;
FIG. **13** is a top view of a second embodiment of the female connector in a patient temperature control system; and,
FIG. **14** is a bottom view of a second embodiment of the female connector in a patient temperature control system.
The broken line showing in the FIGS. **1** through **14** are for illustrative purposes only and forms no part of the claimed design.

1 Claim, 8 Drawing Sheets

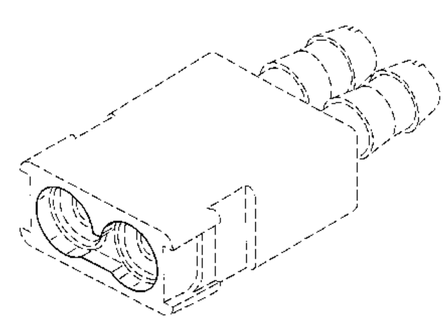

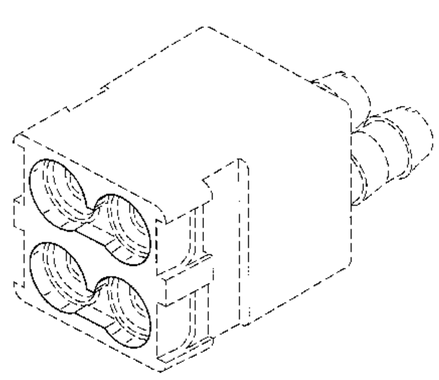

U.S. PATENT DOCUMENTS

4,508,123	A		4/1985	Wyatt et al.	128/692
4,512,163	A		4/1985	Wells et al.	62/394
4,691,762	A		9/1987	Elkins et al.	165/46
4,762,388	A	*	8/1988	Tanaka et al.	D13/133
4,832,615	A	*	5/1989	Thakrar et al.	439/272
4,844,072	A		7/1989	French et al.	128/400
4,919,134	A		4/1990	Streeter	128/400
4,962,761	A		10/1990	Golden	128/400
4,987,618	A		1/1991	Tolbert	4/515
5,051,562	A		9/1991	Bailey et al.	219/506
5,097,829	A		3/1992	Quisenberry	128/400
5,165,127	A		11/1992	Nicholson	5/421
5,190,032	A		3/1993	Zacoi	128/400
5,270,005	A		12/1993	Raible	422/46
D347,491	S		5/1994	Holloway	D28/20
5,344,436	A		9/1994	Fontenot et al.	607/104
5,411,541	A		5/1995	Bell et al.	607/104
5,456,701	A		10/1995	Stout	607/104
D364,680	S		11/1995	Dye	D24/129
5,466,216	A		11/1995	Brown et al.	604/33
5,466,250	A		11/1995	Johnson, Jr. et al.	607/104
5,470,353	A		11/1995	Jensen	607/104
5,486,207	A		1/1996	Mahawili	607/104
5,496,357	A		3/1996	Jensen et al.	607/108
5,507,792	A		4/1996	Mason et al.	607/104
5,609,571	A		3/1997	Buckberg et al.	604/4
5,609,620	A		3/1997	Daily	607/105
5,634,940	A		6/1997	Panyard	607/104
5,640,728	A		6/1997	Graebe	5/606
5,643,191	A		7/1997	Buckberg et al.	604/4
5,702,358	A		12/1997	Witherspoon et al.	604/4
5,730,720	A		3/1998	Sites et al.	604/27
5,800,486	A		9/1998	Thome et al.	607/105
5,830,214	A		11/1998	Flom et al.	606/41
5,865,841	A		2/1999	Kolen et al.	607/104
5,895,418	A		4/1999	Saringer	607/104
5,957,879	A		9/1999	Roberts et al.	604/4
5,980,561	A		11/1999	Kolen et al.	607/104
5,997,816	A		12/1999	McIntosh et al.	422/44
6,074,389	A		6/2000	Levine et al.	606/45
6,086,609	A		7/2000	Buckley	607/104
6,117,164	A		9/2000	Gildersleeve et al.	607/108
6,149,620	A		11/2000	Baker et al.	604/22
6,149,674	A		11/2000	Borders	607/96
6,197,045	B1		3/2001	Carson	607/104
6,206,876	B1		3/2001	Levine et al.	606/45
6,238,427	B1		5/2001	Matta	607/104
D475,014	S	*	5/2003	Kano	D13/133

* cited by examiner

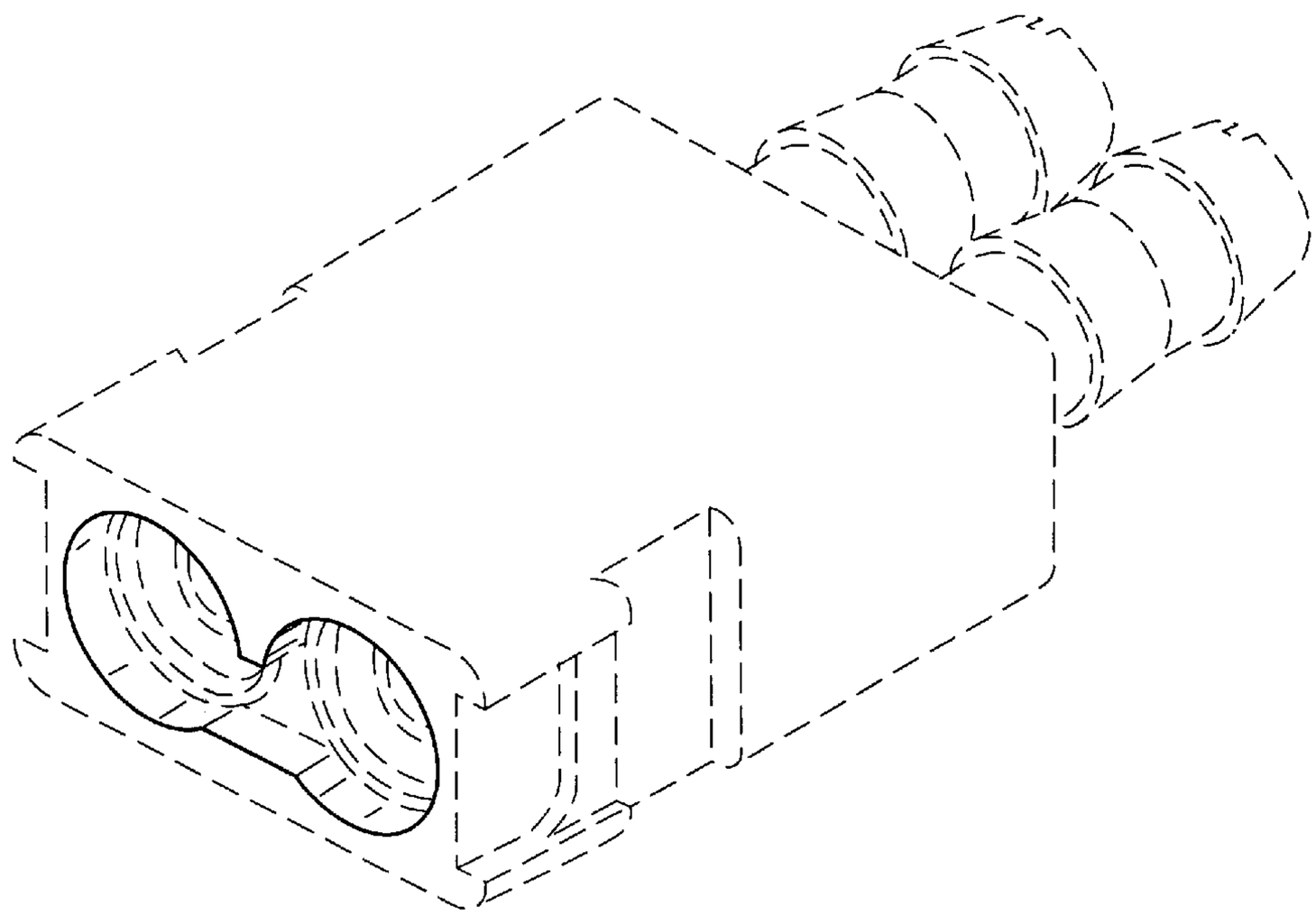

FIG.1

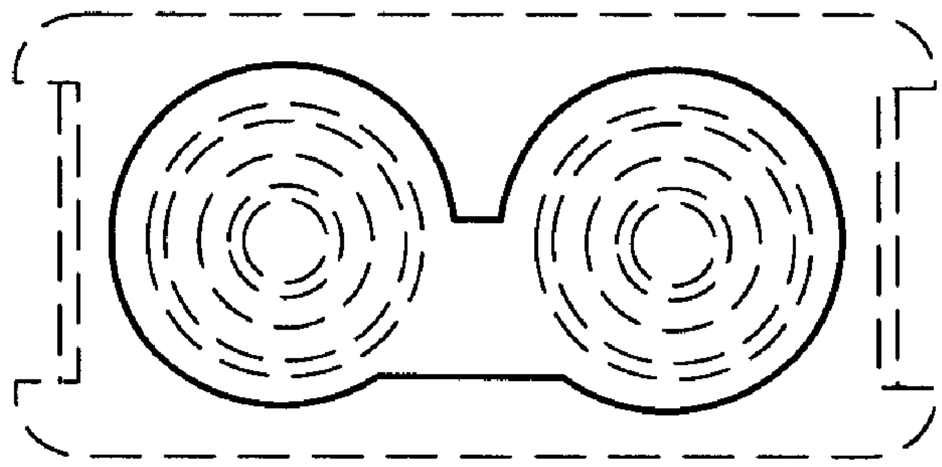

FIG.2

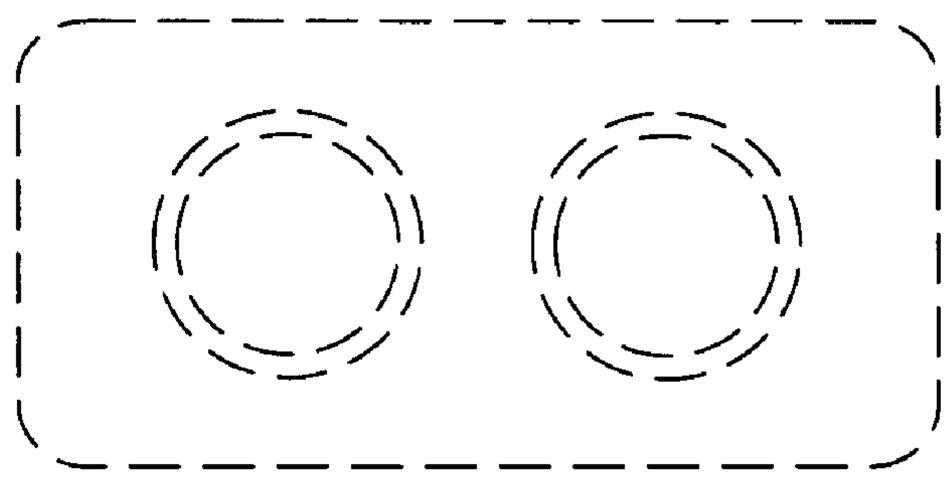

FIG.3

FIG.4

FIG.5

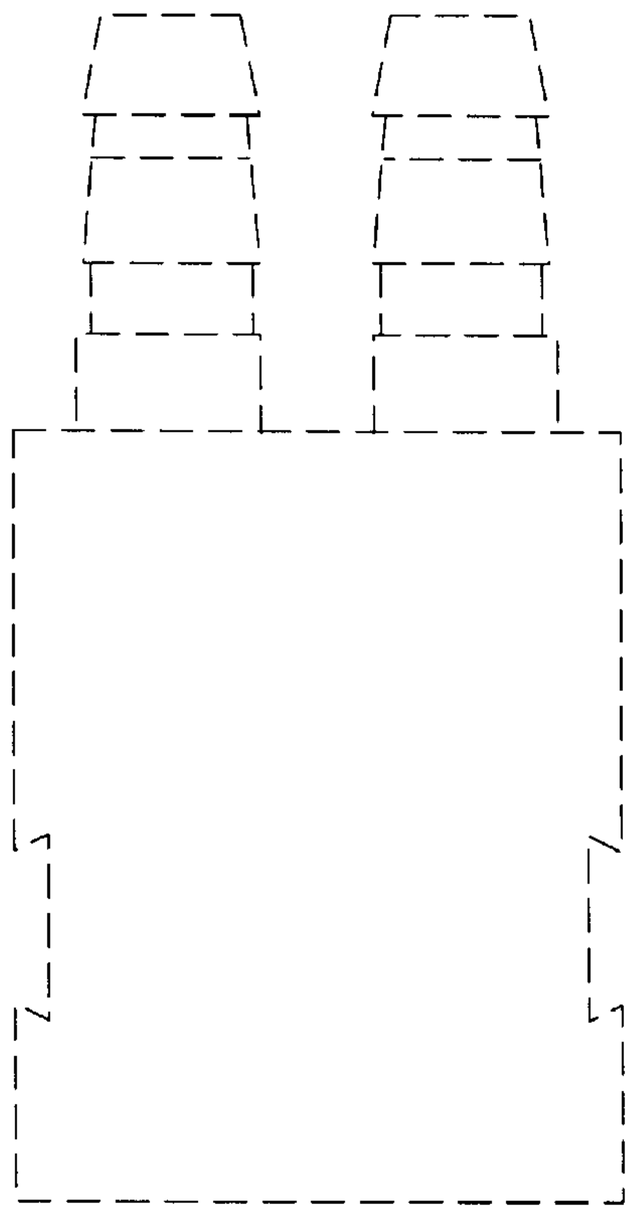

FIG.6

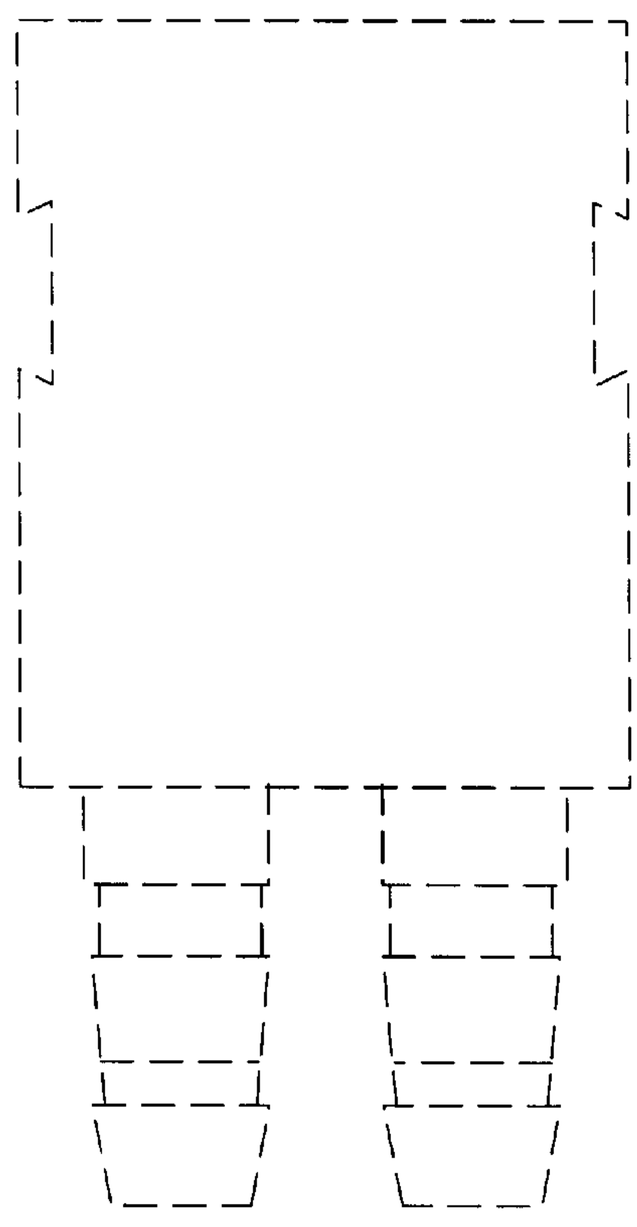

FIG.7

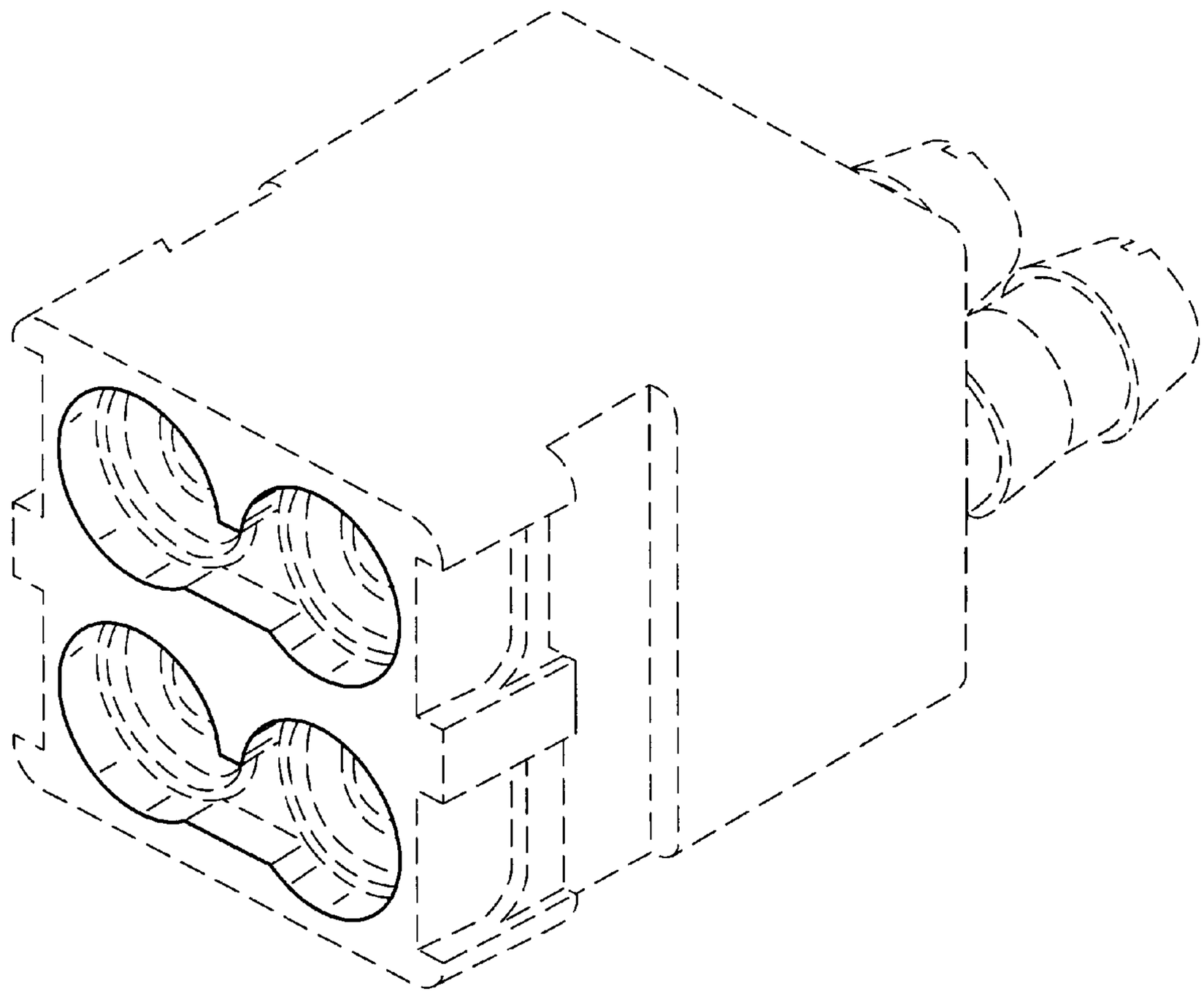

FIG.8

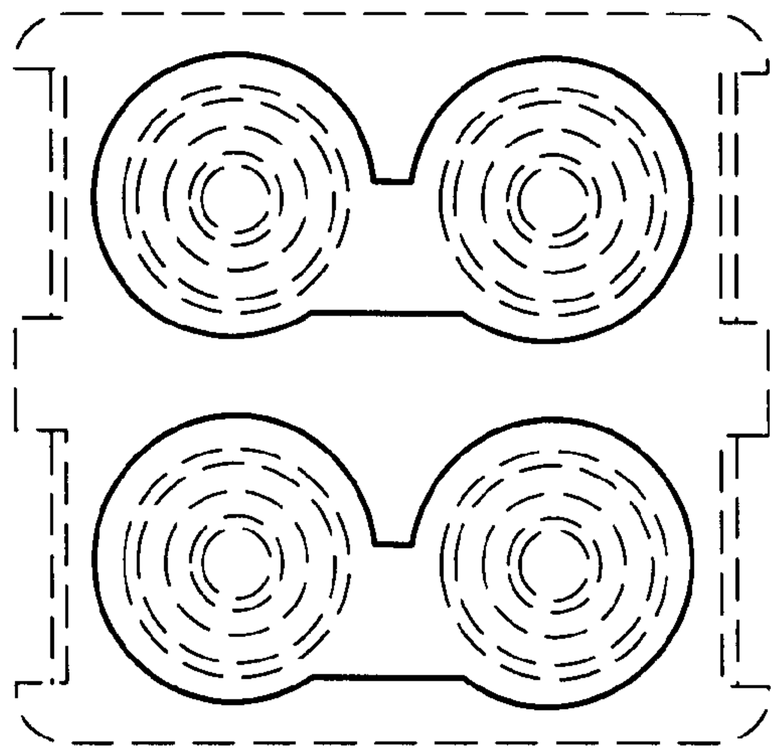

FIG.9

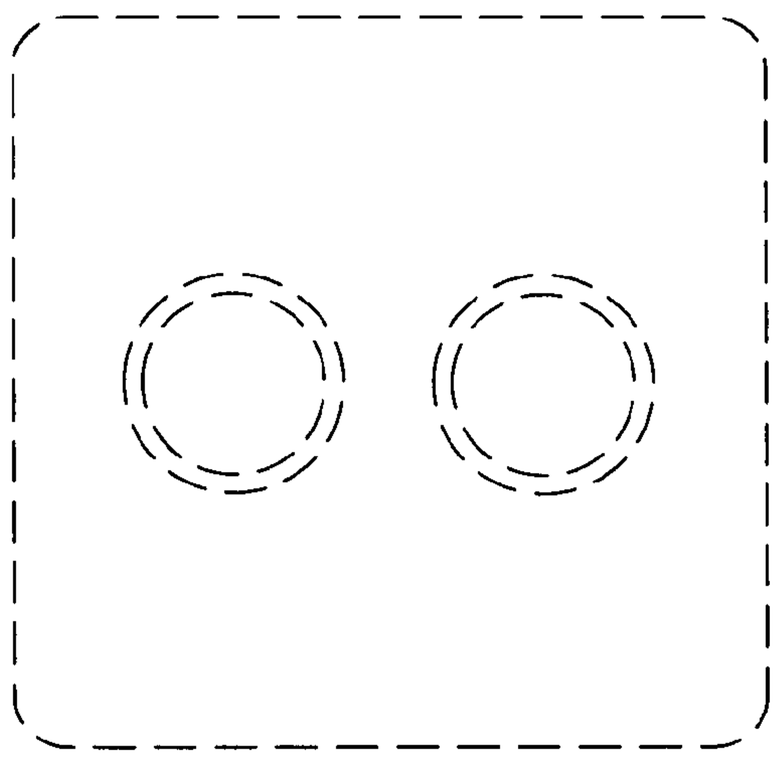

FIG.10

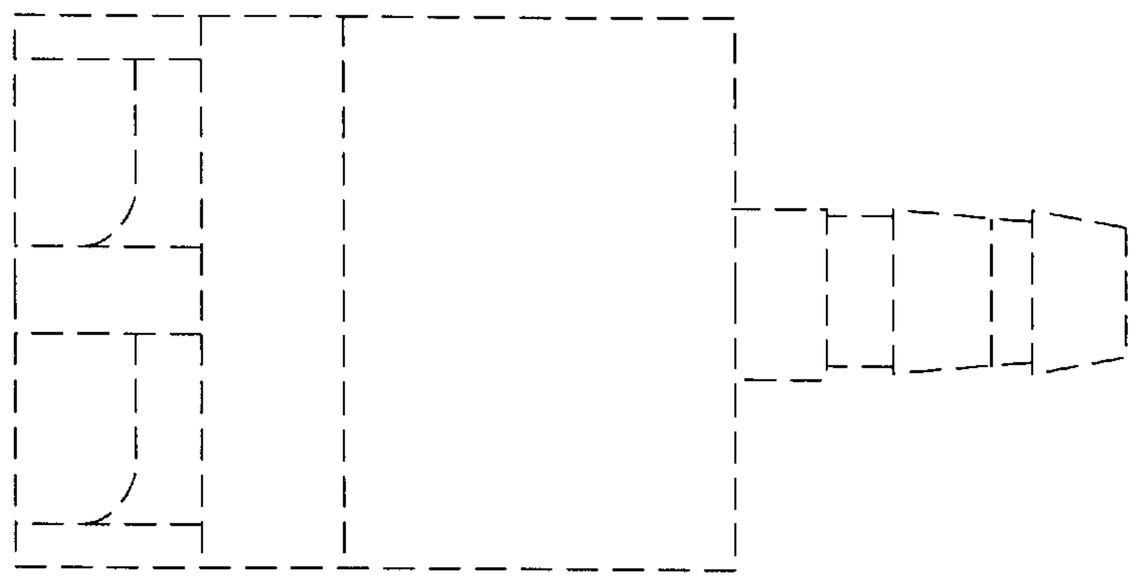

FIG.11

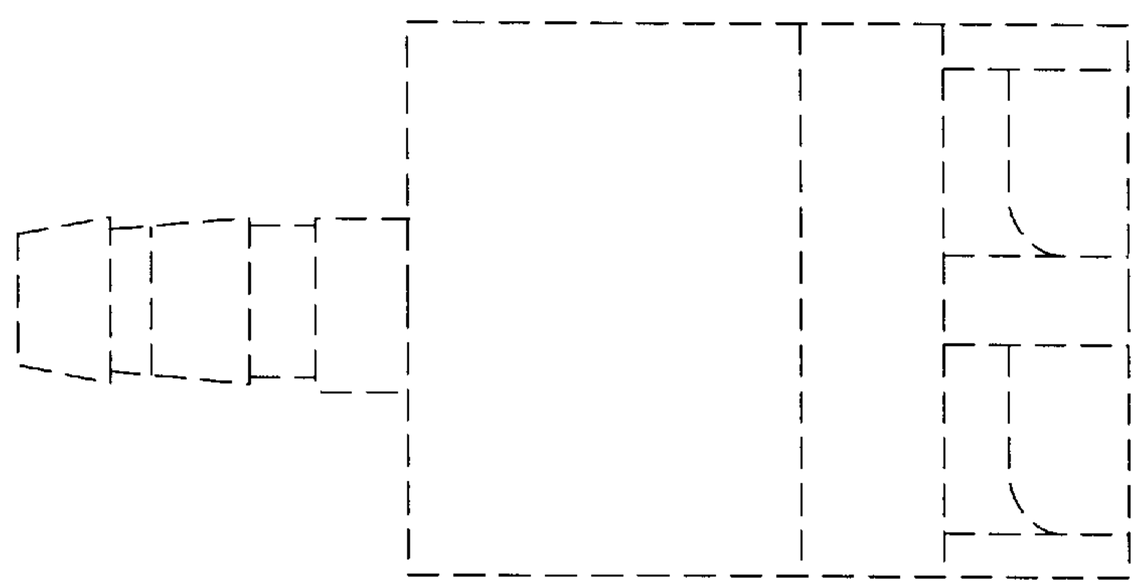

FIG.12

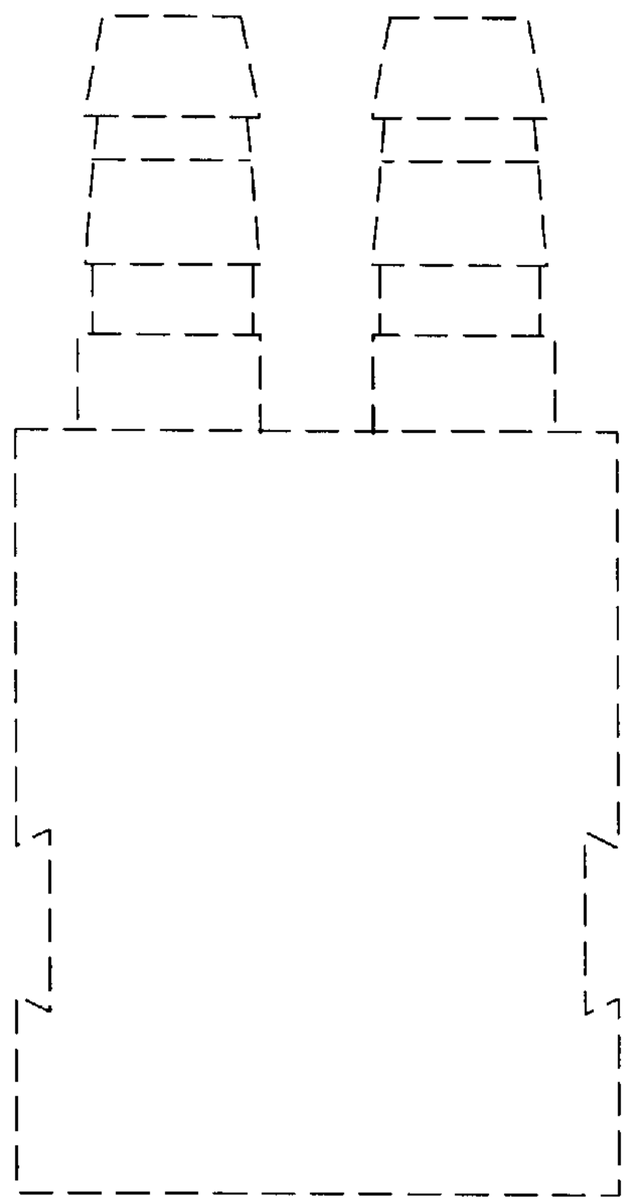

FIG.13

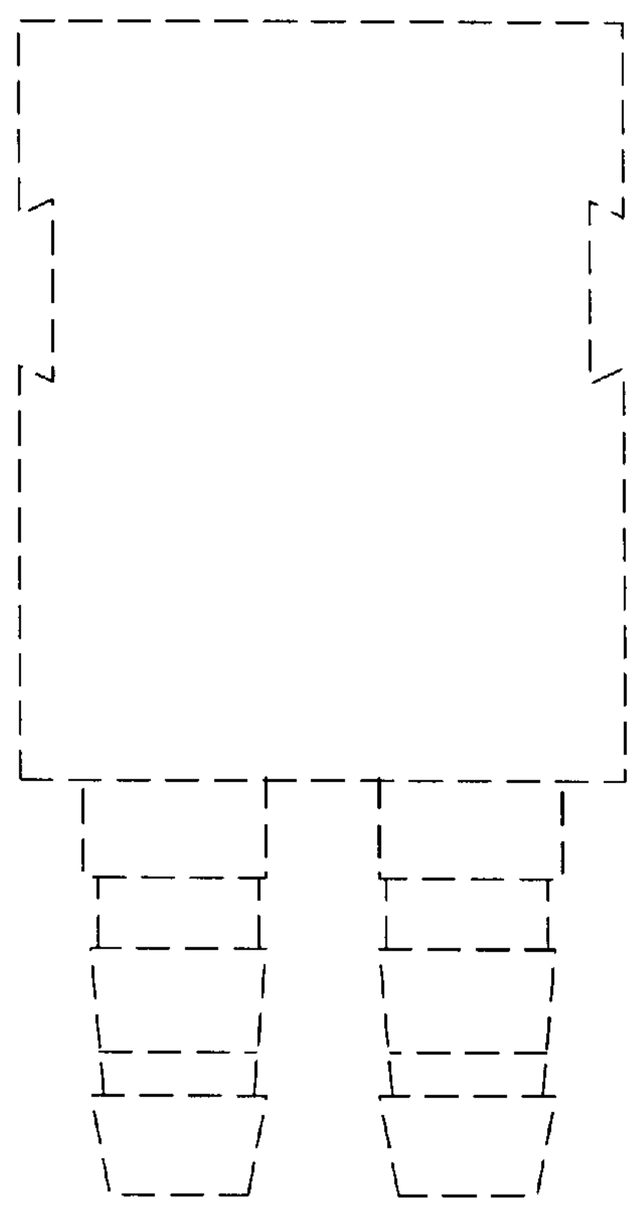

FIG.14

UNITED STATES PATENT AND TRADEMARK OFFICE

CERTIFICATE OF CORRECTION

PATENT NO. : Des. 492,773 S
DATED : July 6, 2004
INVENTOR(S) : Ellingboe et al.

It is certified that error appears in the above-identified patent and that said Letters Patent is hereby corrected as shown below:

Title page,
Item [56], **References Cited**, delete "4,304,213 A 12/1981 Jereckos……. 607/104", and insert therefor -- 5,304,213 A 4/1994 Berke et al. ……. 607/104 --.

Signed and Sealed this

Seventeenth Day of August, 2004

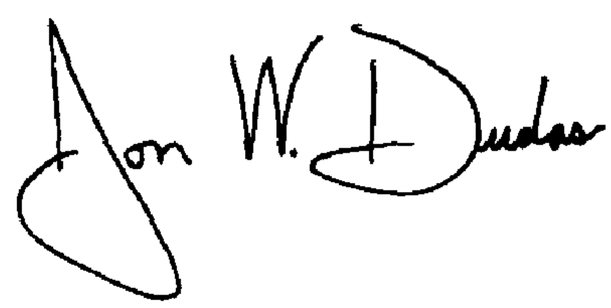

JON W. DUDAS
Acting Director of the United States Patent and Trademark Office