US00D486993S

(12) **United States Design Patent**
McGuyer

(10) **Patent No.: US D486,993 S**
(45) **Date of Patent: ** Feb. 24, 2004**

(54) **HANDLE FOR MULTI-TOOL KITCHEN DEVICE**

(75) Inventor: **Carter W. McGuyer**, Muscle Shoals, AL (US)

(73) Assignee: **Robbins Industries, Inc.**, Florence, AL (US)

(**) Term: **14 Years**

(21) Appl. No.: **29/164,208**

(22) Filed: **Jul. 19, 2002**

(51) **LOC (7) Cl.** **07-02**
(52) **U.S. Cl.** **D7/395**
(58) **Field of Search** D7/393, 395, 401.2, D7/681–697; 16/110.1, 430, 431, 422; D8/107

(56) **References Cited**

U.S. PATENT DOCUMENTS

1,577,880	A	3/1926	Stuart
D172,235	S	5/1954	Marino
2,682,950	A	7/1954	Mercer
3,343,706	A	9/1967	Berend

(List continued on next page.)

Primary Examiner—Terry A. Wallace
(74) *Attorney, Agent, or Firm*—Kramer Levin Naftalis & Frankel LLP; Gregor N. Neff

(57) **CLAIM**

The ornamental design for a handle for multi-tool kitchen device, as shown and described.

DESCRIPTION

FIG. **1** is a perspective view of a handle for multi-tool kitchen device showing my new design;
FIG. **2** is a perspective view thereof with the forward end ring being in an alternate orientation;
FIG. **3** is a perspective view of FIG. **1** shown on a larger scale;
FIG. **4** is a perspective view of FIG. **2** shown on a larger scale;
FIG. **5** is a top plan view of FIG. **2**;
FIG. **6** is a side elevation view of FIG. **2**;
FIG. **7** is a front elevation view of FIG. **2**;
FIG. **8** is a top plan view of FIG. **1**;
FIG. **9** is a front elevation view of FIG. **1**; and,
FIG. **10** is a side elevation view of FIG. **1**.
The broken lines are for illustrative purposes only and form no part of the claimed design.

1 Claim, 2 Drawing Sheets

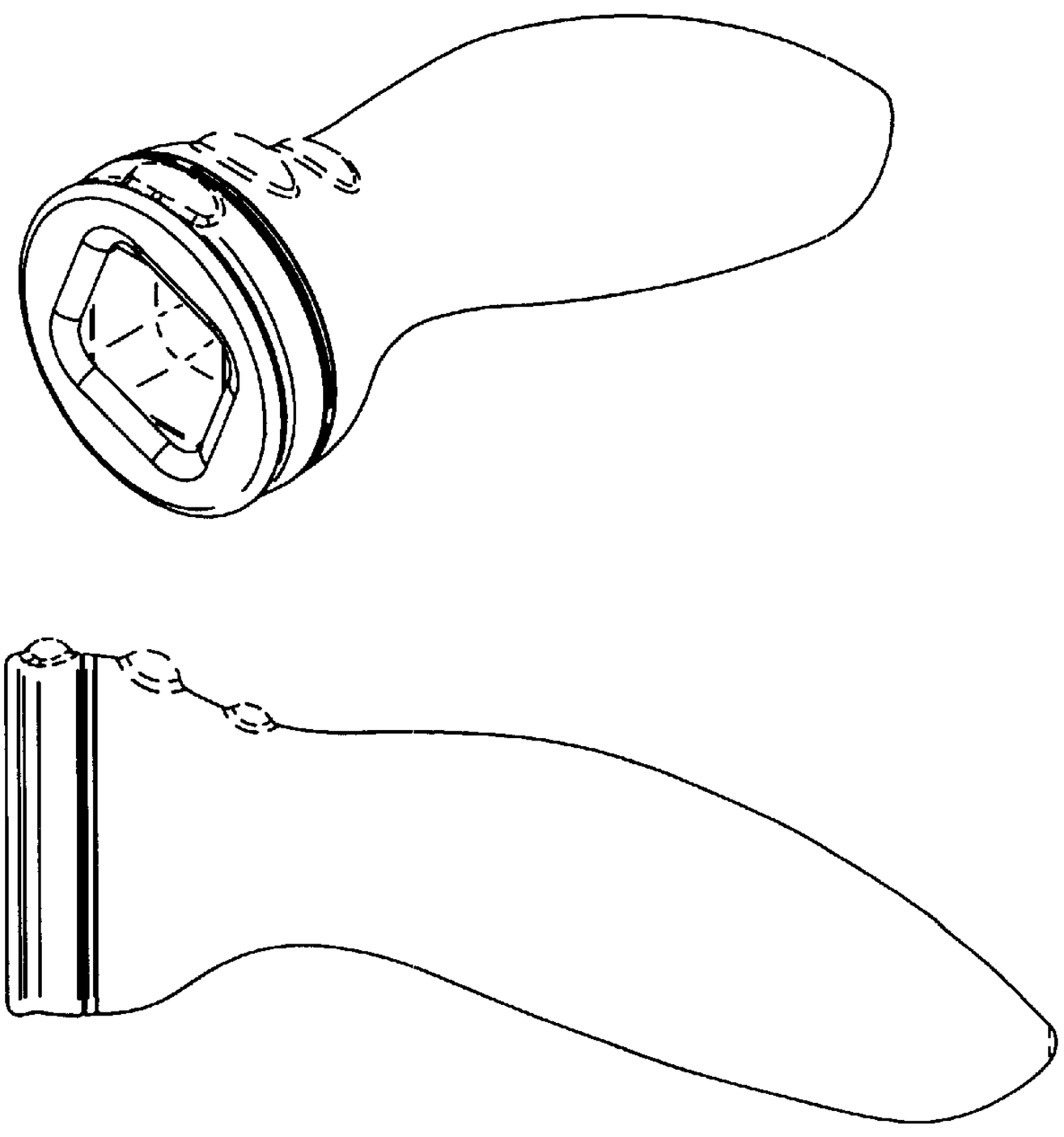

U.S. PATENT DOCUMENTS

D221,291	S	7/1971	Futter et al.	
3,796,454	A	3/1974	Williamson	
3,839,793	A	10/1974	Crapio	
3,842,534	A	10/1974	Walters	
3,857,482	A	12/1974	Shelton	
4,207,673	A	6/1980	DiGirolamo et al.	
4,247,216	A	1/1981	Pansini	
4,406,368	A	9/1983	Hermes	
4,425,709	A	1/1984	Quenzi	
4,432,137	A	2/1984	Okada	
4,529,088	A	7/1985	Quong	
4,579,489	A	4/1986	Sarantitis	
4,619,363	A	10/1986	Wolfseder	
4,870,754	A	10/1989	Chiou	
4,941,232	A	7/1990	Decker et al.	
4,953,862	A	9/1990	Uke et al.	
5,105,953	A	4/1992	Finnegan	
5,133,455	A	7/1992	Chow	
5,344,021	A	9/1994	Rose	
5,385,230	A	1/1995	Nygard	
5,441,152	A	8/1995	Estes	
5,479,708	A	1/1996	Thomas	
5,535,484	A	7/1996	Gibson	
5,598,634	A	2/1997	Berns	
5,737,803	A	4/1998	Tisdale	
5,752,968	A	5/1998	Jolly et al.	
5,810,187	A	9/1998	Woodring	
5,829,099	A	11/1998	Kopelman et al.	
D407,929	S	4/1999	Woodring	
5,918,751	A	7/1999	Kelly	
5,933,918	A	8/1999	Wallays	
D420,887	S	2/2000	Chen	
6,115,921	A	9/2000	Garneau, Sr.	
6,129,433	A	10/2000	Rosenberg	
RE37,190	E	5/2001	Stowell et al.	
6,230,366	B1 *	5/2001	Lin	16/431
D444,029	S	6/2001	Wold et al.	
D451,358	S *	12/2001	Griese et al.	D8/107
D452,114	S *	12/2001	Lin	D7/395
6,467,622	B1	10/2002	Hull	

* cited by examiner

FIG.1

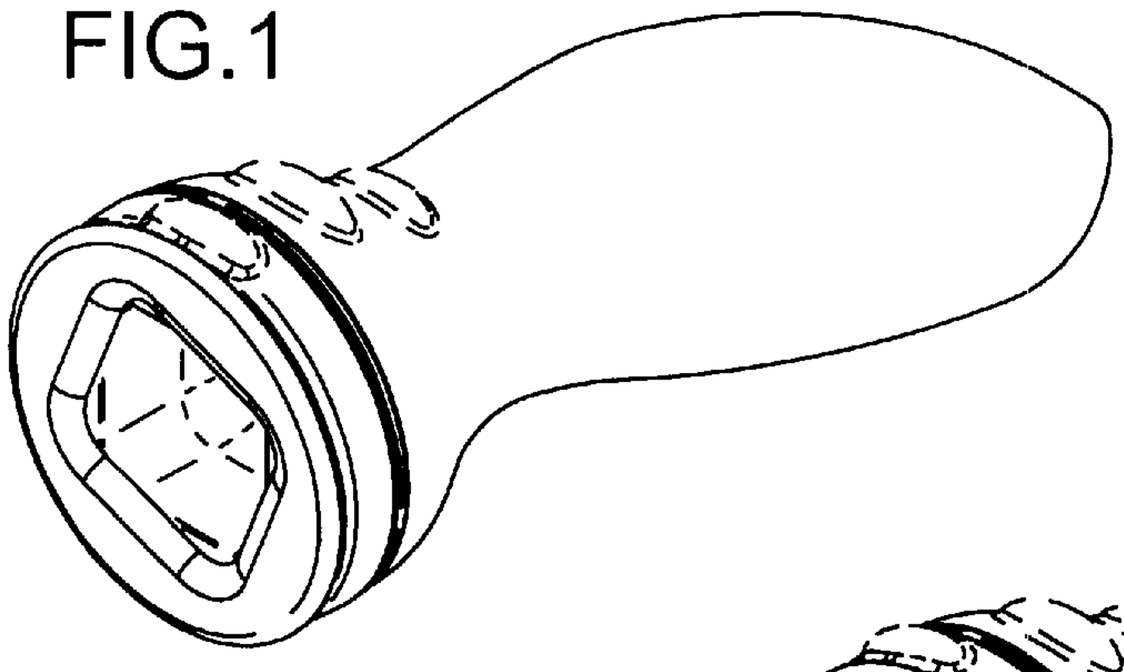

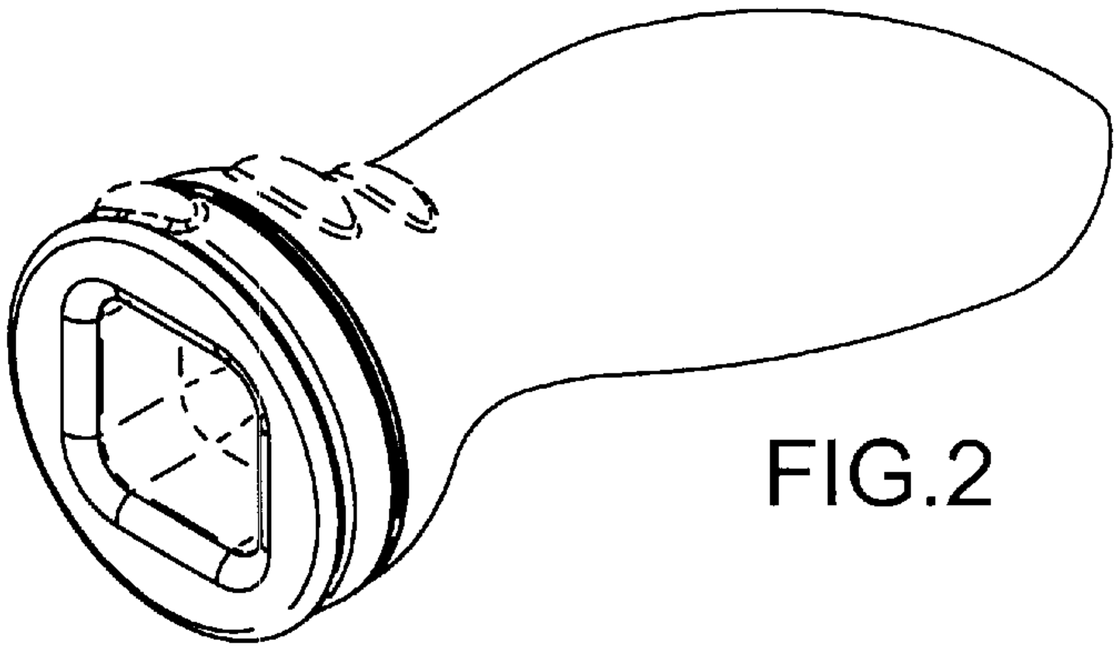

FIG.2

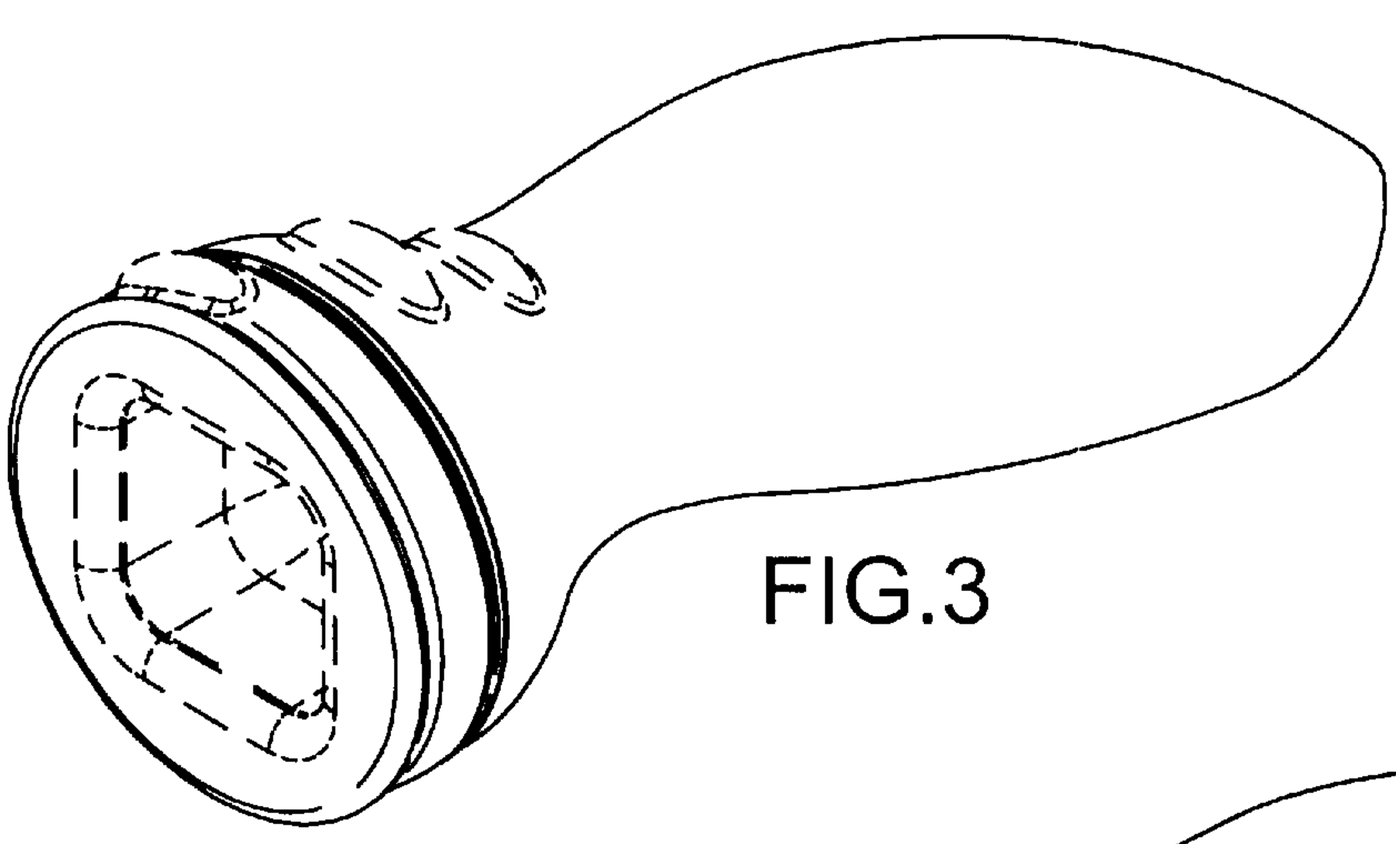

FIG.3

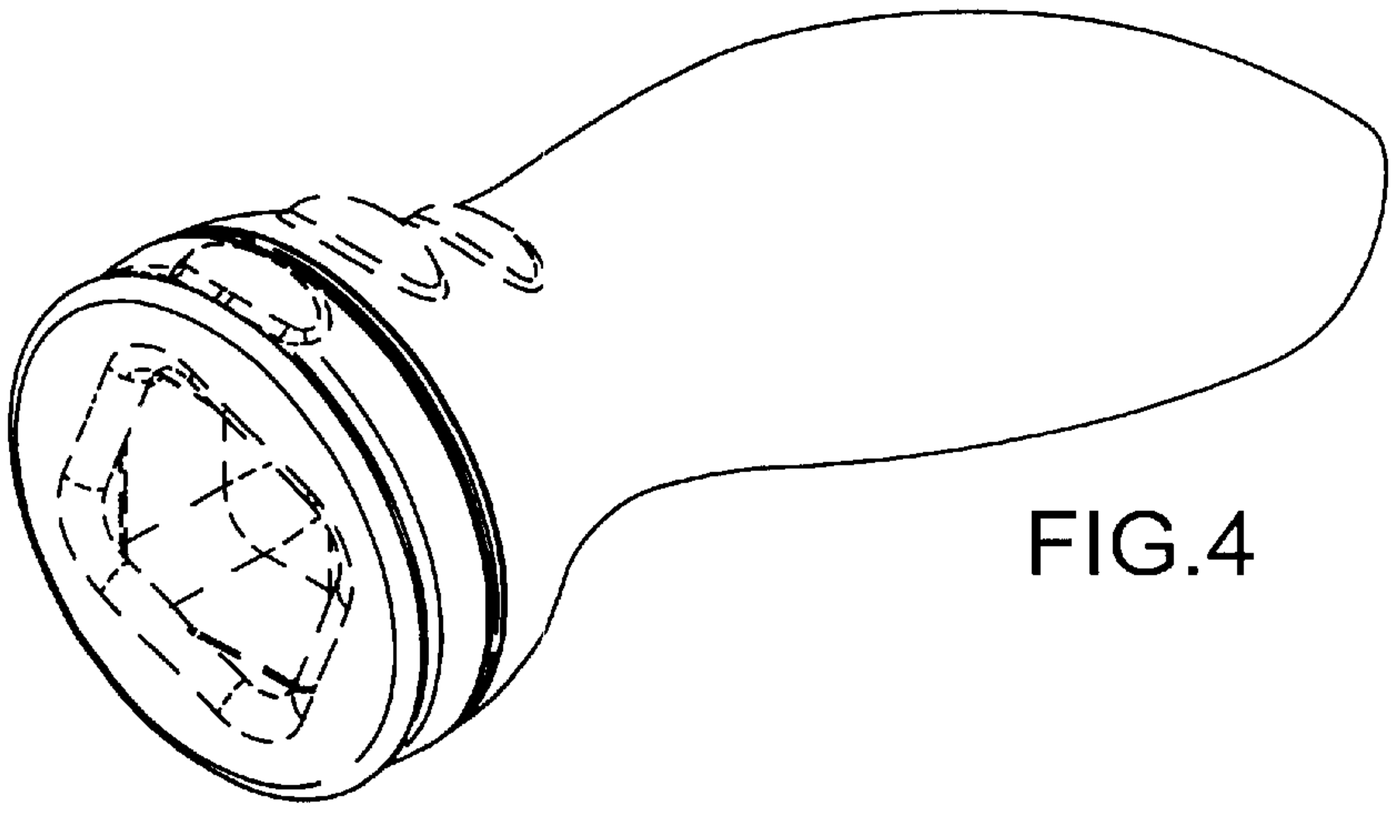

FIG.4

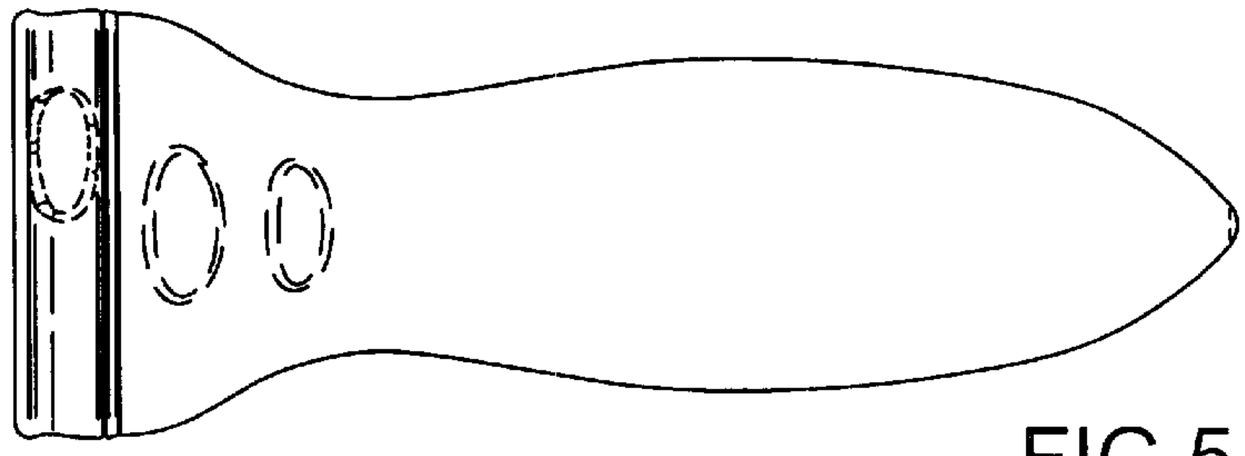

FIG.5

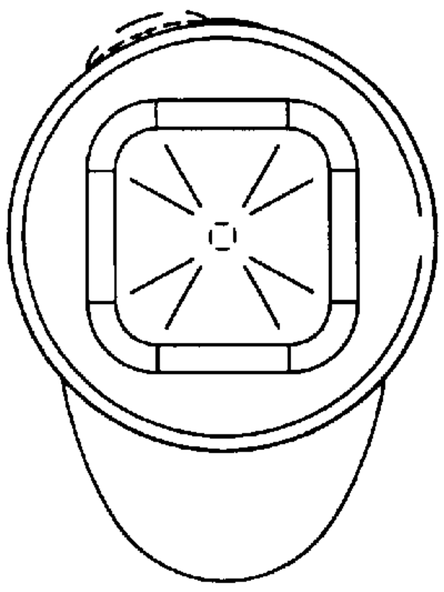

FIG.7

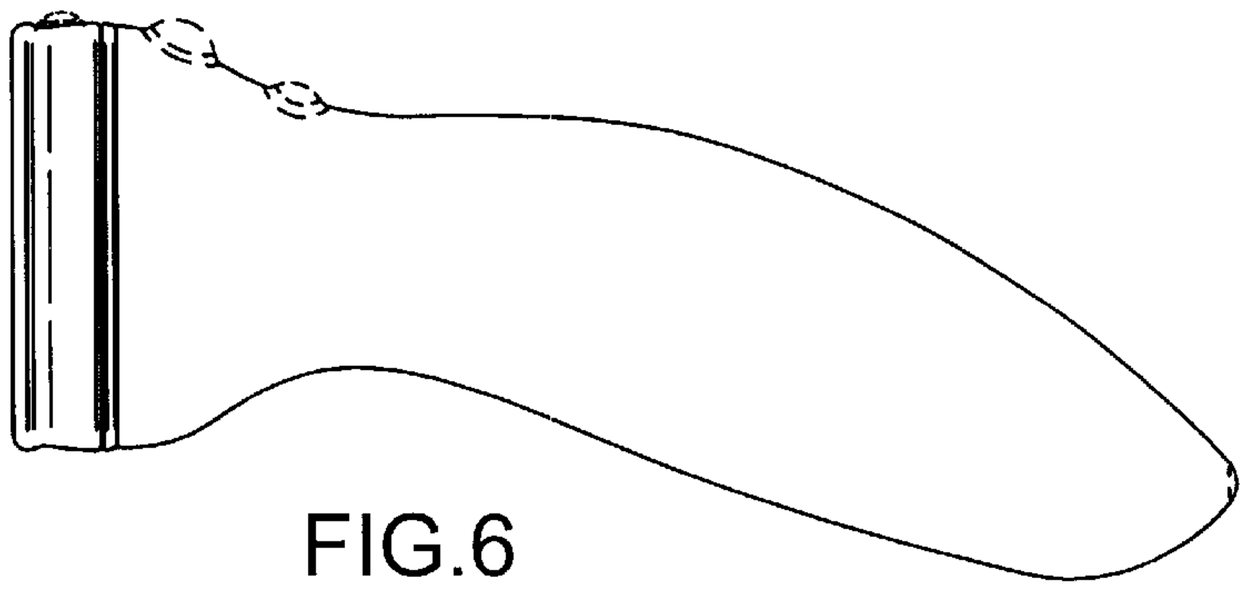

FIG.6

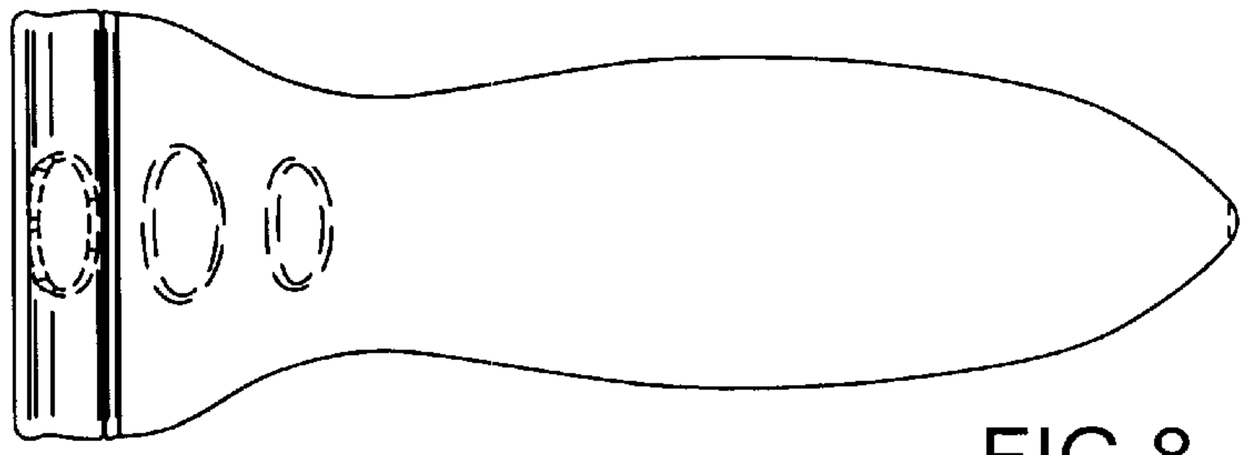

FIG.8

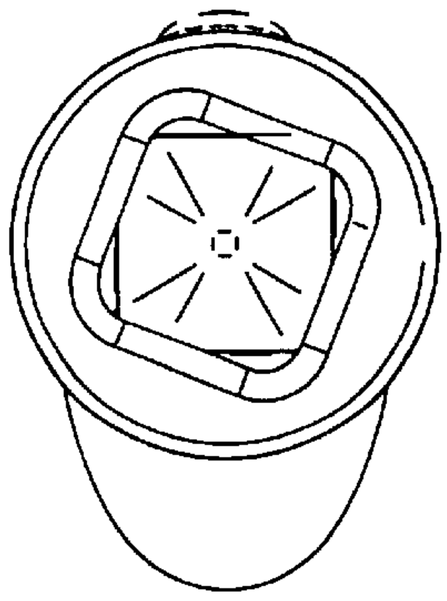

FIG.9

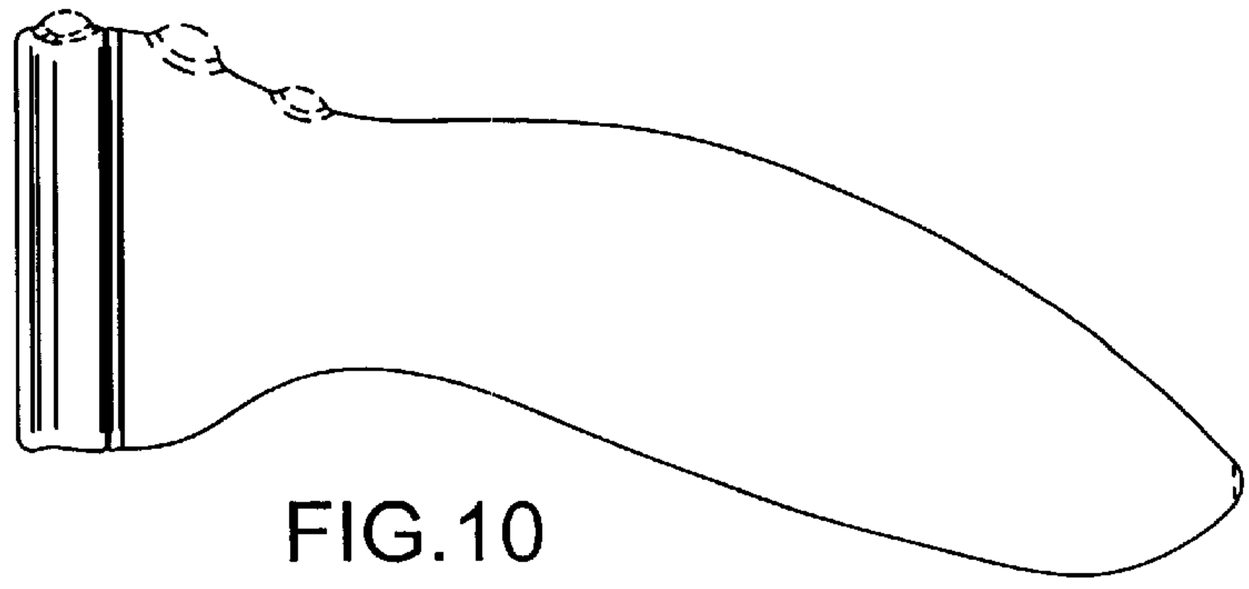

FIG.10