US00D486915S

(12) United States Design Patent

Warschewske et al.

(10) Patent No.: US D486,915 S
(45) Date of Patent: ** Feb. 17, 2004

(54) **SURGICAL CART**

(75) Inventors: **Udo Warschewske**, Berlin (DE); **Karl-Heinz Reinwald**, Berlin (DE); **Peter Korn**, Binger Brueck (DE)

(73) Assignee: **Ohio Medical Instrument Company, Inc.**, Cincinnati, OH (US)

(**) Term: **14 Years**

(21) Appl. No.: **29/168,689**

(22) Filed: **Oct. 7, 2002**

(51) **LOC (7) Cl.** **24-01**
(52) **U.S. Cl.** **D24/185**; D34/14
(58) **Field of Search** D34/12–27; D24/185, D24/170, 172, 186, 187; 606/42, 40, 39, 33, 37, 34, 130; 312/209, 218, 217, 216, 222, 250, 349.12; 600/437

(56) **References Cited**

U.S. PATENT DOCUMENTS

5,016,948	A		5/1991	Welch et al.	312/250
D347,896	S	*	6/1994	Dickinson et al.	D24/185
D352,106	S	*	11/1994	Fanney et al.	D24/185
D355,257	S	*	2/1995	Nobles	D24/185
5,518,310	A		5/1996	Ellman et al.	312/349.12
D438,952	S	*	3/2001	Cimino et al.	D24/107
6,379,302	B1		4/2002	Kessman et al.	600/437
D465,895	S	*	11/2002	Pfefferle et al.	D34/19
D477,082	S	*	7/2003	Bromley	D24/170
2001/0034530	A1		10/2001	Malackowski et al.	606/130

* cited by examiner

Primary Examiner—Kay H. Chin
(74) *Attorney, Agent, or Firm*—Wood, Herron & Evans LLP

(57) **CLAIM**

The ornamental design for surgical cart, as shown and described.

DESCRIPTION

FIG. **1** is a front perspective view of a surgical cart according to the present invention.
FIG. **2** is a front view of the cart shown in FIG. **1**.
FIG. **3** is a left side view of the cart shown in FIG. **1**.
FIG. **4** is a right side view of the cart shown in FIG. **1**.
FIG. **5** is a rear view of the cart shown in FIG. **1**.
FIG. **6** is a top view of the cart shown in FIG. **1**; and,
FIG. **7** is a bottom of the cart shown in FIG. **1**.

1 Claim, 4 Drawing Sheets

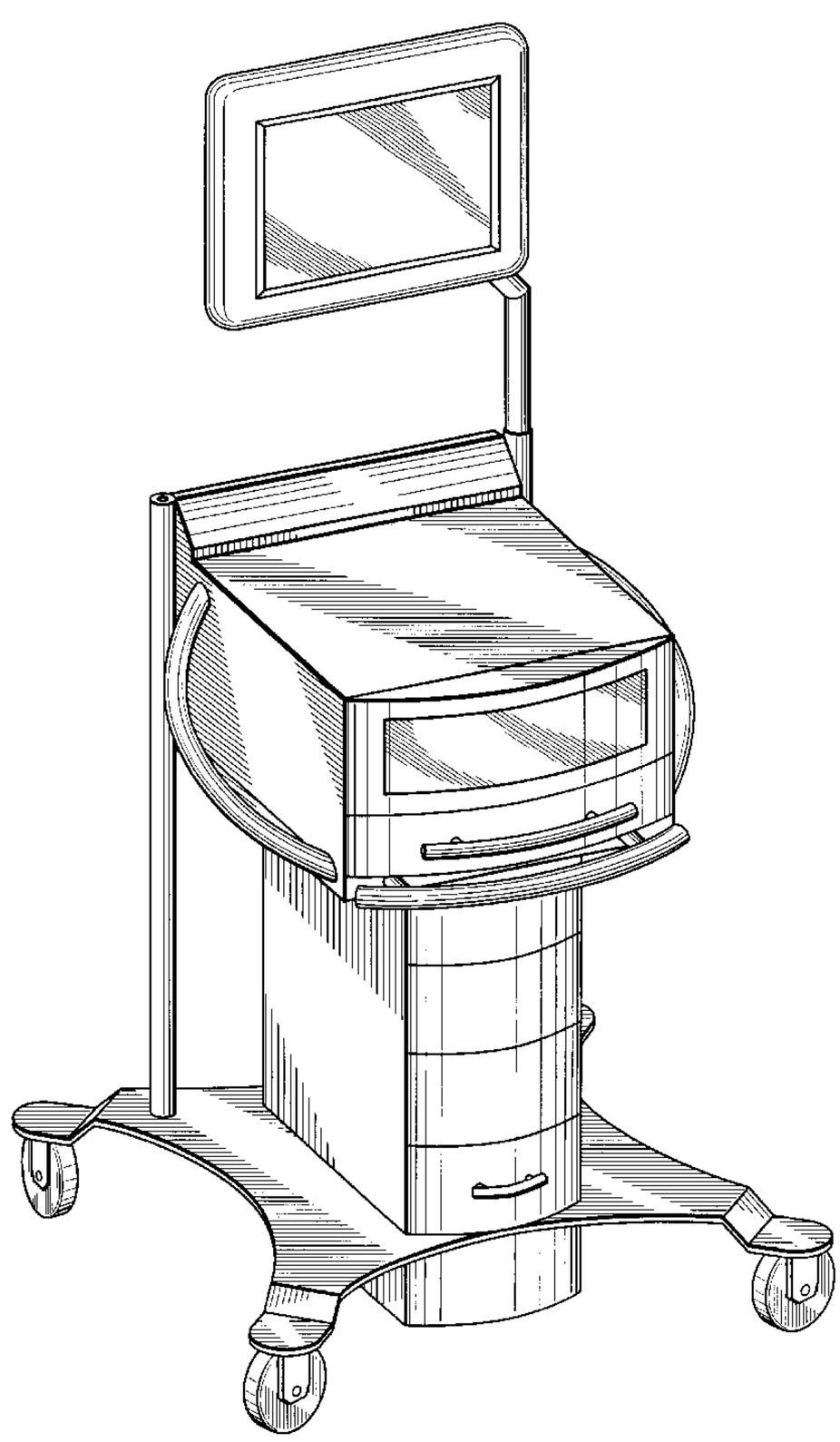

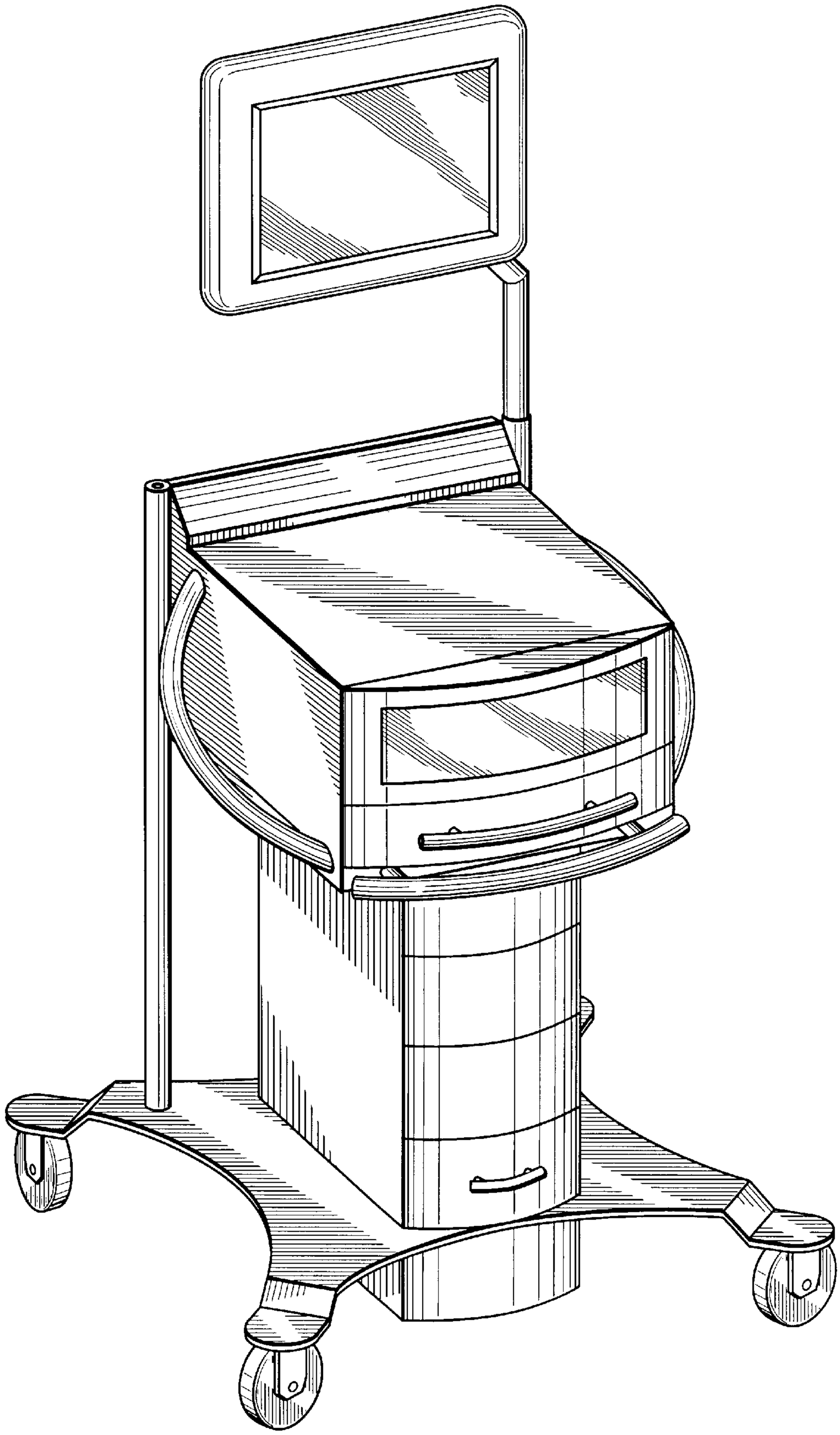

FIG. 1

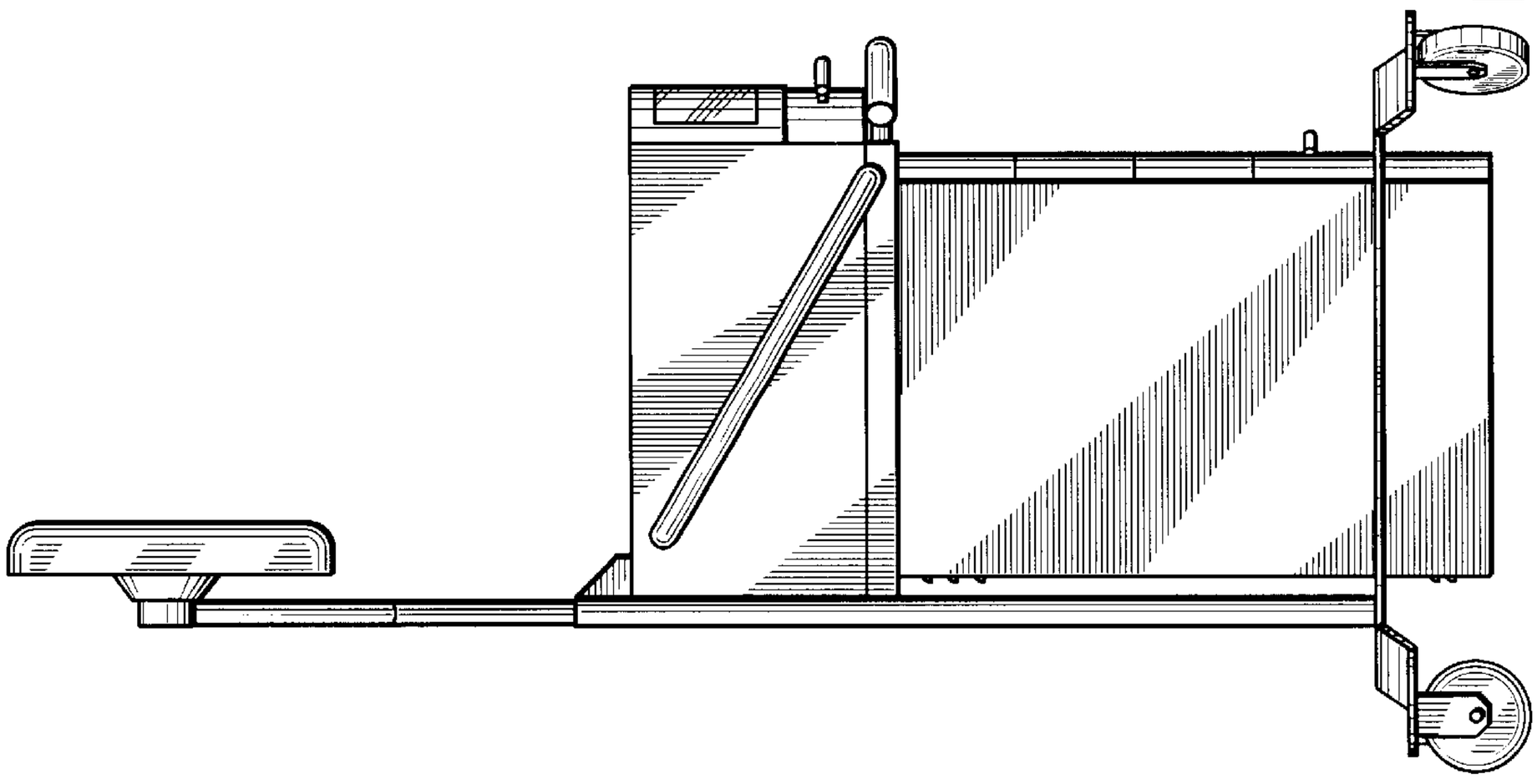

FIG. 3

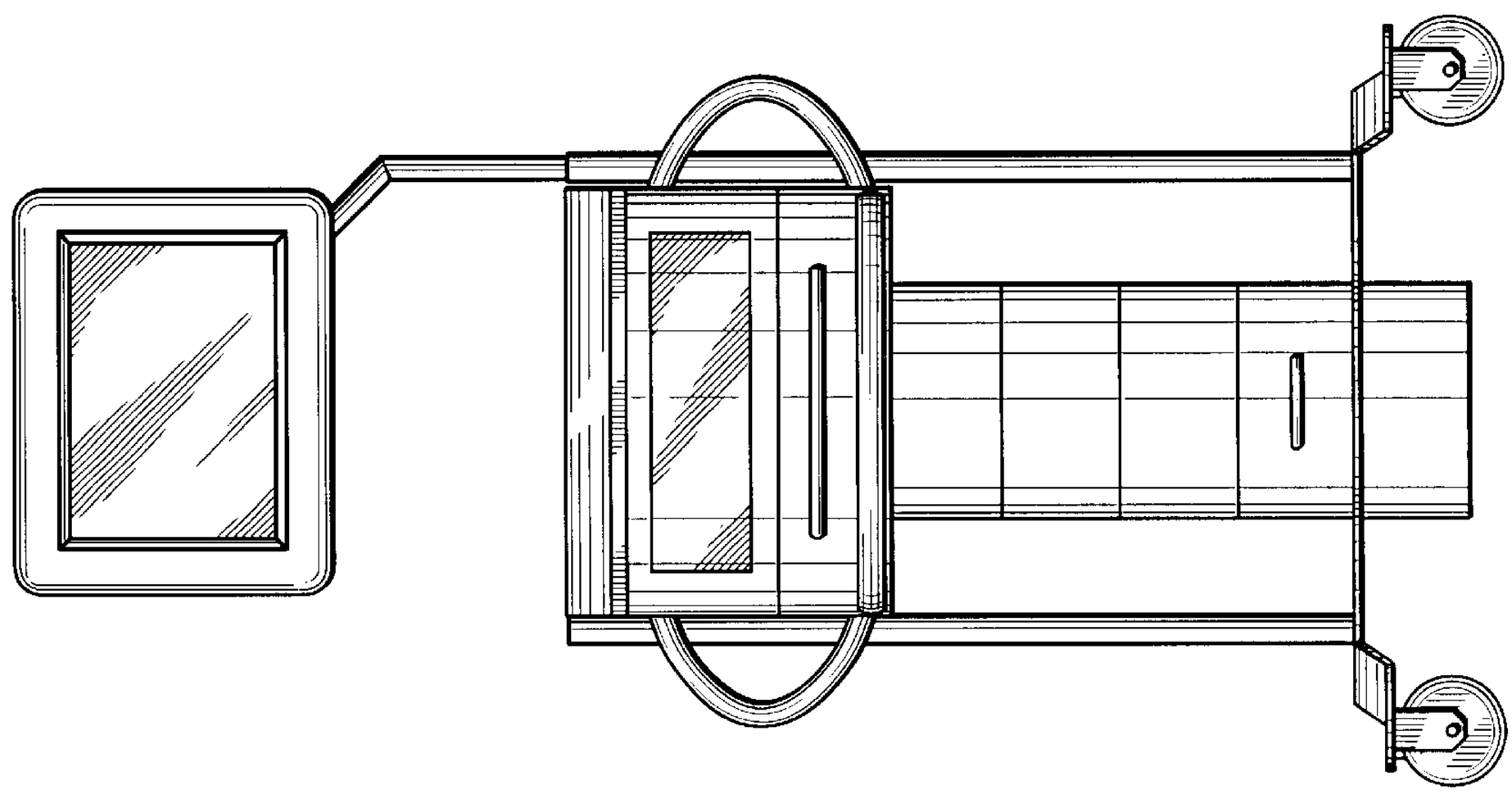

FIG. 2

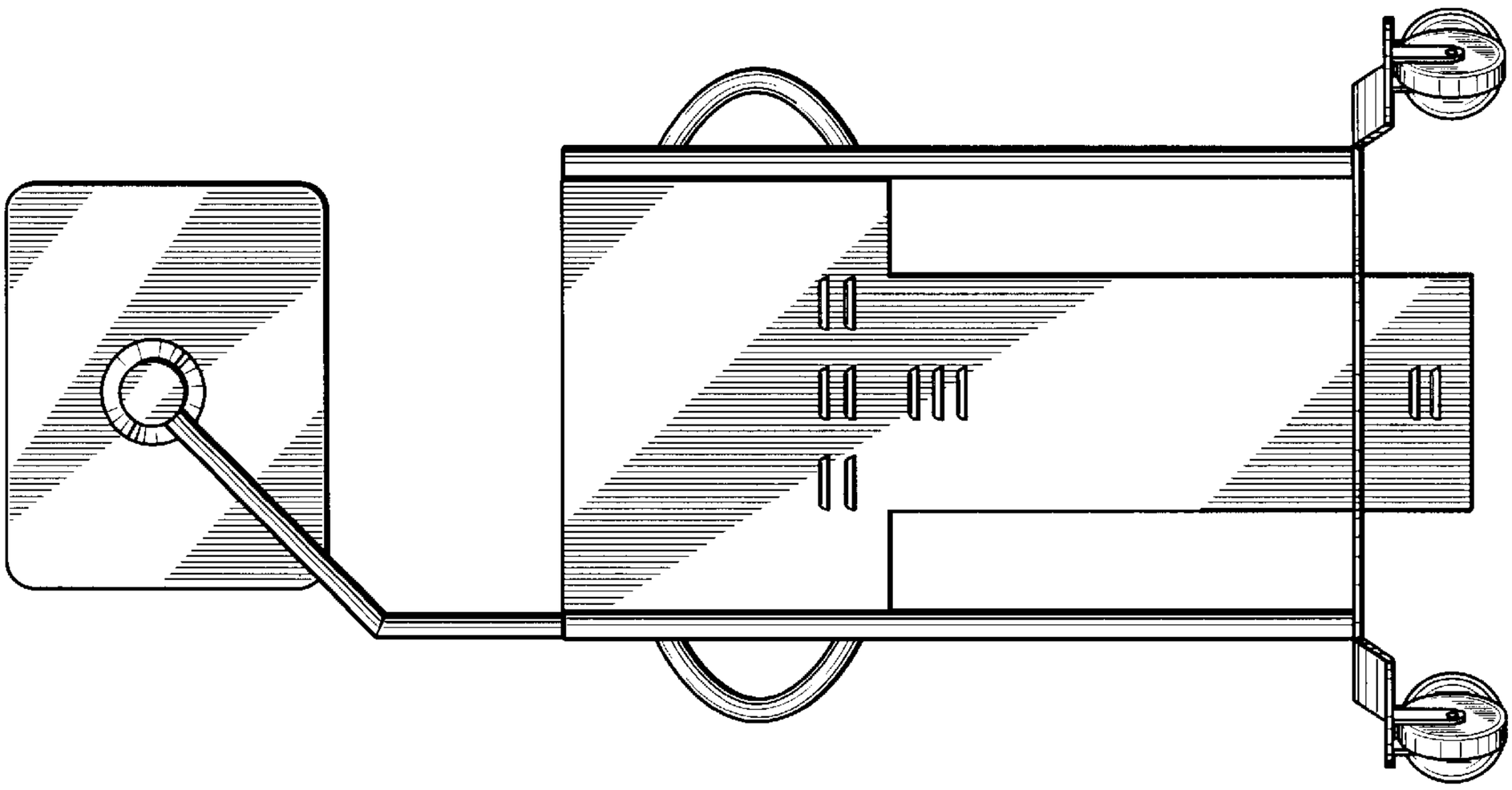

FIG. 5

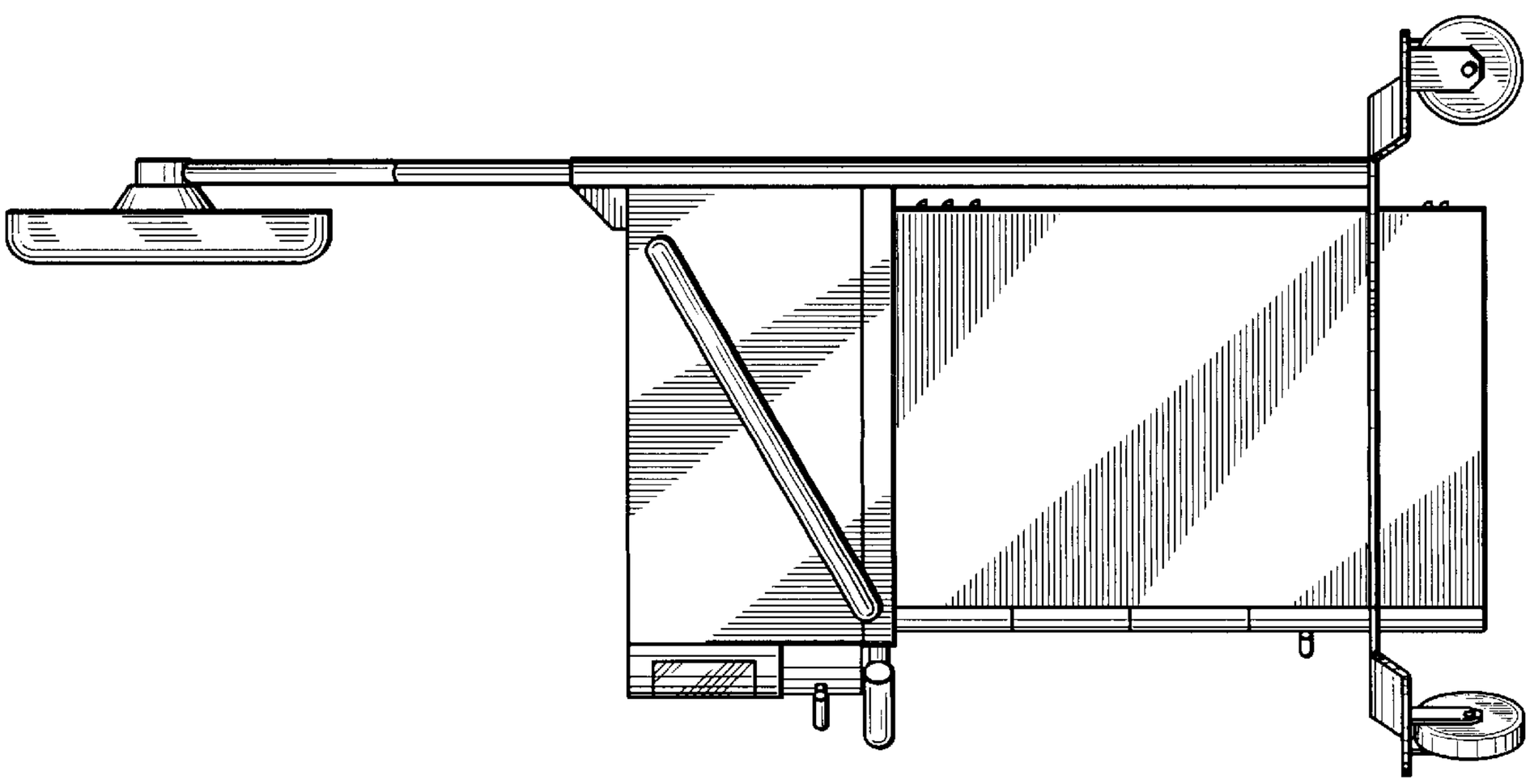

FIG. 4

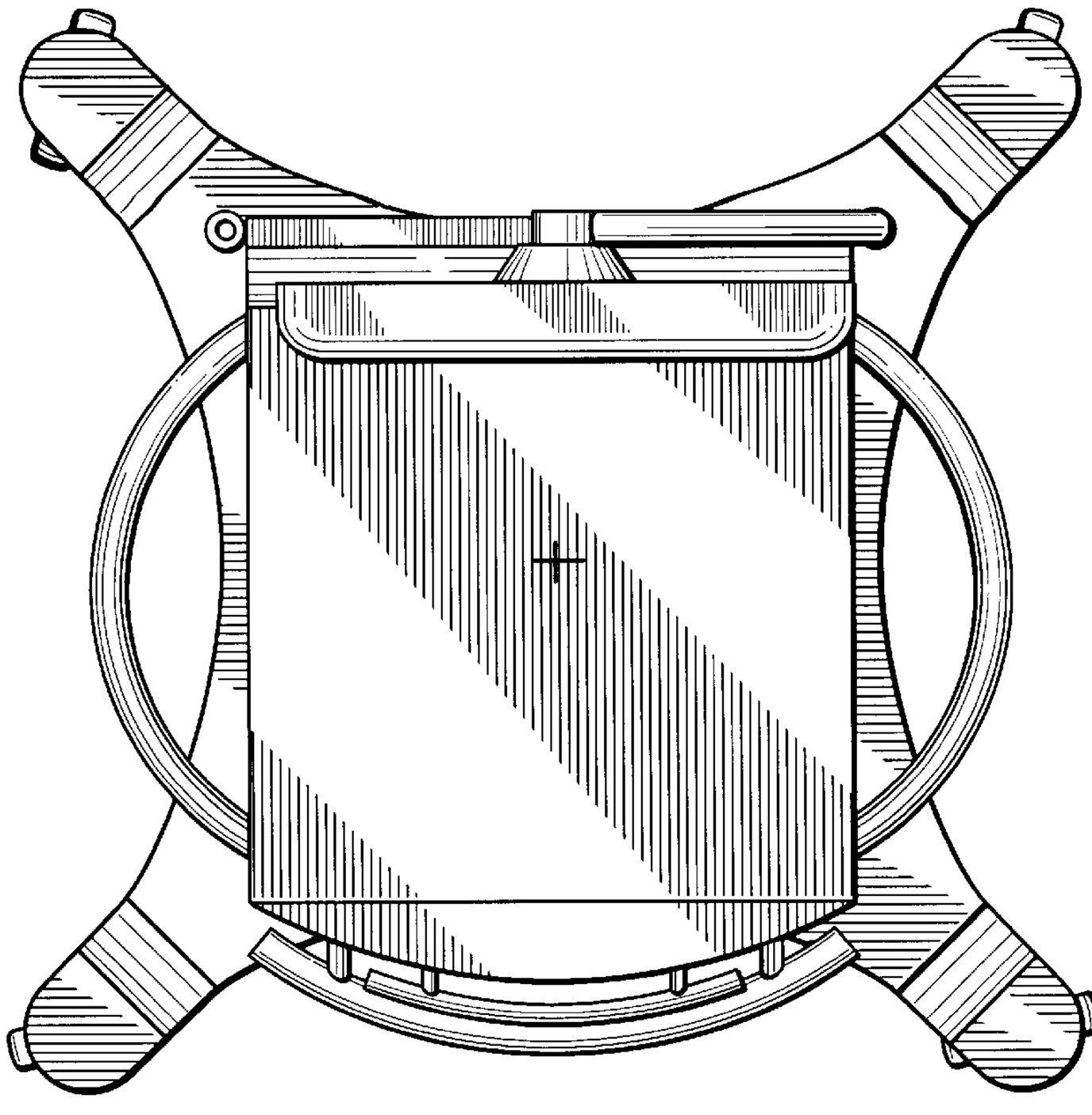

FIG. 6

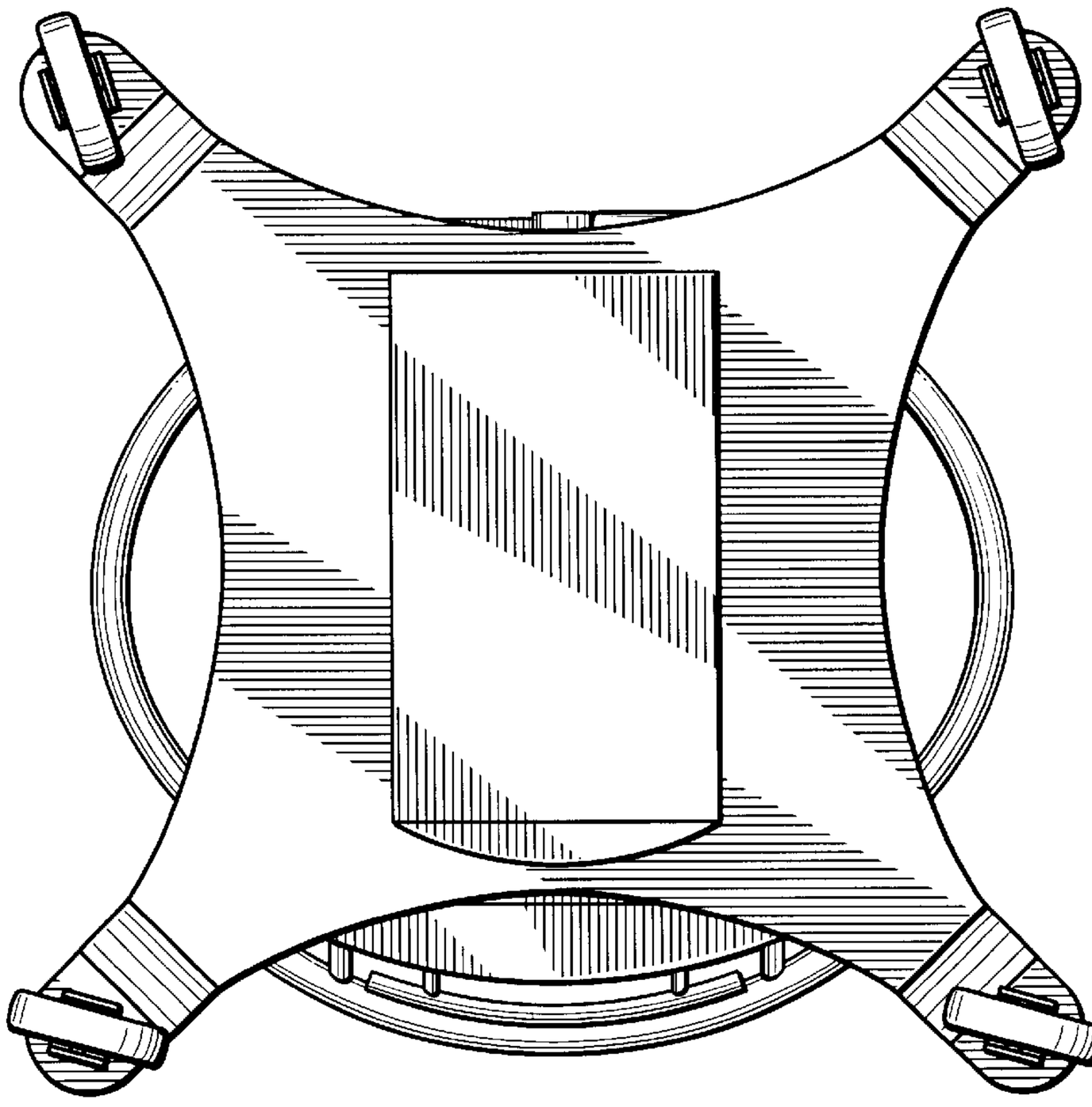

FIG. 7

UNITED STATES PATENT AND TRADEMARK OFFICE

CERTIFICATE OF CORRECTION

PATENT NO. : Des. 486,915 S
DATED : February 17, 2004
INVENTOR(S) : Udo Warchewske, Karl-Heinz Reinwald and Peter Korn

It is certified that error appears in the above-identified patent and that said Letters Patent is hereby corrected as shown below:

Title page,
After Item [56], please insert the following: -- This application is a continuation in part application based on presently pending U.S. Provisional Patent Application Serial No. 60/369,858 filed on April 5, 2002, and bearing the title "SURGICAL CART."

Be it know the we, Udo Warschewske, Karl-Heinz reinwald and Peter Korn have invented a new, original and ornamental design for SURGICAL CART, of which the following is a specification, reference being had to the accompanying drawings forming a part thereof. --

Item [57], **DESCRIPTION**, reads "FIG. 1 is a front perpective view of a surgical cart" and should read -- FIG.1 is a front perpective view of a first embodiment of the cart --; and reads "FIG. 7 is a bottom of the cart." and should read -- FIG. 7 is a bottom view of the cart --.

Signed and Sealed this

Fourth Day of May, 2004

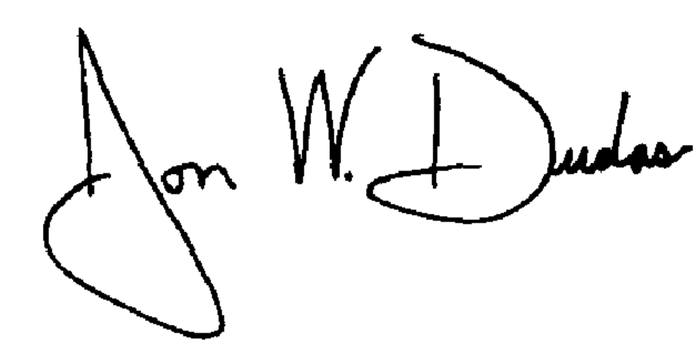

JON W. DUDAS
Acting Director of the United States Patent and Trademark Office