US00D486896S

(12) United States Design Patent

Long et al.

(10) Patent No.: US D486,896 S
(45) Date of Patent: ** Feb. 17, 2004

(54) **WATER HEATER**

(75) Inventors: **Norris R. Long**, Wichita, KS (US); **Mitchell L. Wilgus**, Andover, KS (US); **Gary Israel**, Andover, KS (US)

(73) Assignee: **The Coleman Company, Inc.**, Wichita, KS (US)

(**) Term: **14 Years**

(21) Appl. No.: **29/182,658**

(22) Filed: **May 29, 2003**

(51) **LOC (7) Cl.** **23-03**
(52) **U.S. Cl.** **D23/318**; D23/332
(58) **Field of Search** D23/314, 318, D23/332; 392/362, 365, 366, 373–376

(56) **References Cited**

U.S. PATENT DOCUMENTS

D382,634 S * 8/1997 Jane et al. ..... D23/332 X
D389,905 S * 1/1998 Montague, III et al. ... D23/332
D397,775 S * 9/1998 Chiu et al. ..... D23/332 X
D451,179 S * 11/2001 Marzynski D23/332
6,480,672 B1 * 11/2002 Rosenzweig et al. 392/365

* cited by examiner

Primary Examiner—Brian N. Vinson

(57) **CLAIM**

The ornamental design for a water heater, as shown and described.

DESCRIPTION

FIG. **1** is a top, left rear perspective view of the water heater of the present invention;
FIG. **2** is a front elevational view thereof;
FIG. **3** is a rear elevational view thereof;
FIG. **4** is a right side elevational view thereof;
FIG. **5** is a left side elevational view thereof;
FIG. **6** is a top plan view thereof; and,
FIG. **7** is a bottom plan view thereof.
The broken line showing is for illustrative purposes only and forms no part of the claimed design.

1 Claim, 3 Drawing Sheets

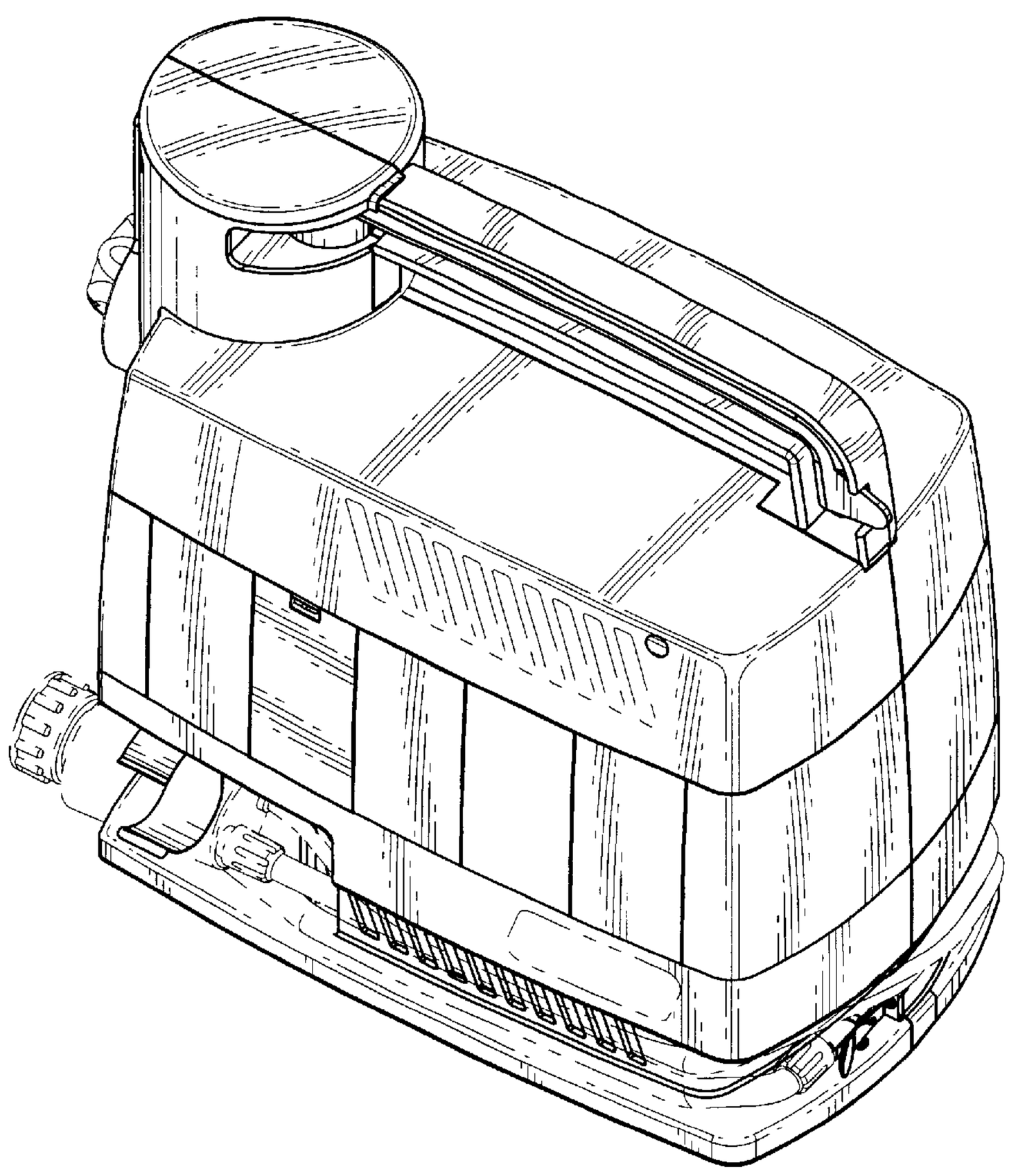

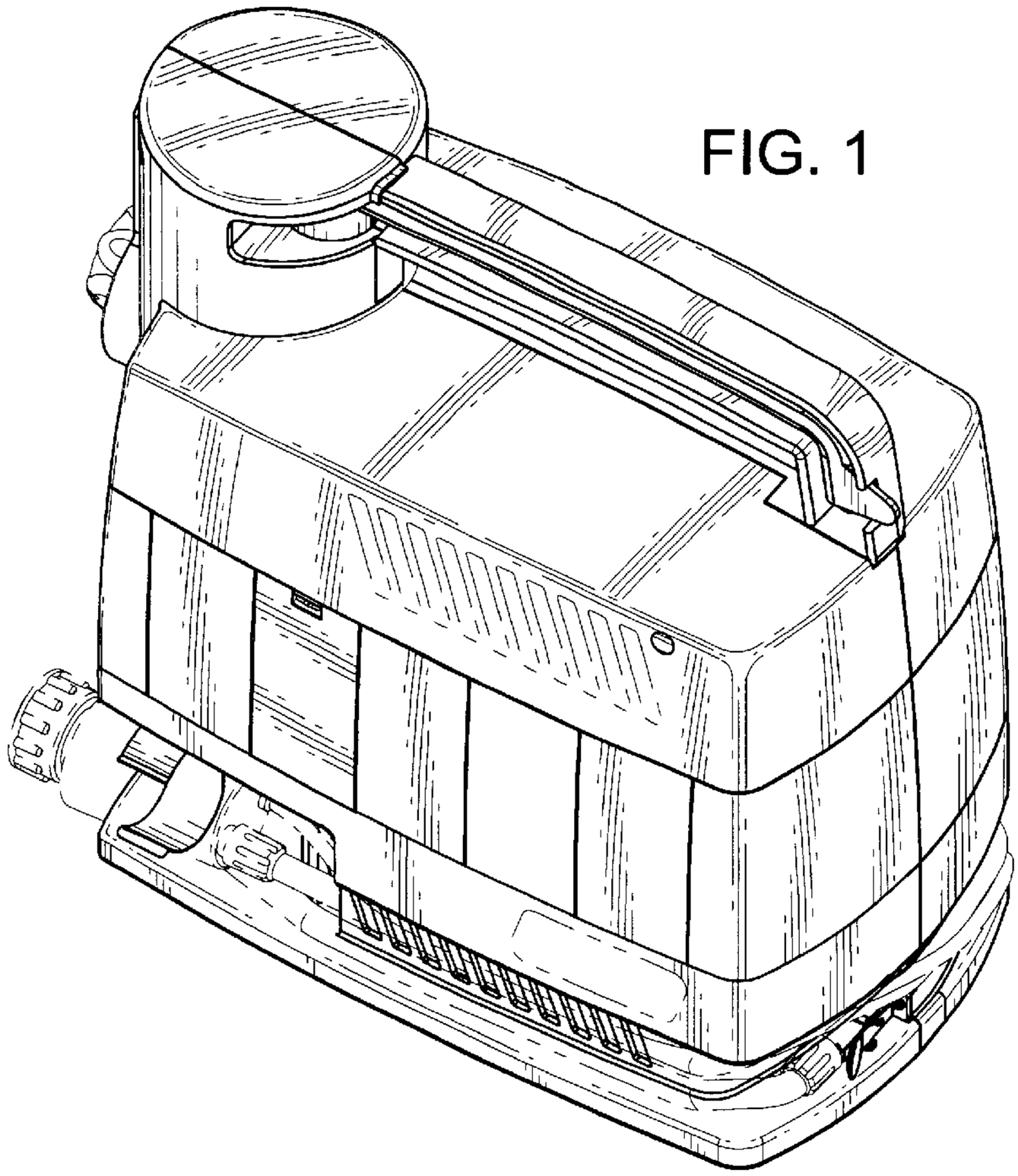

FIG. 1

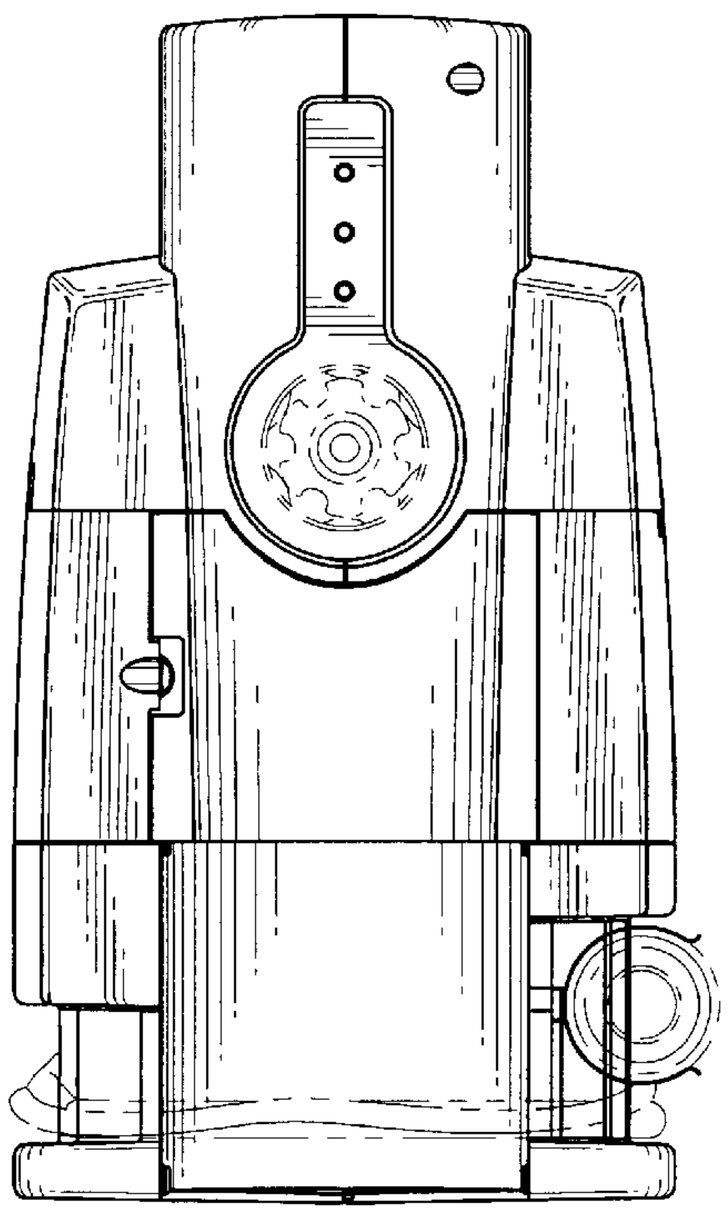

FIG. 2

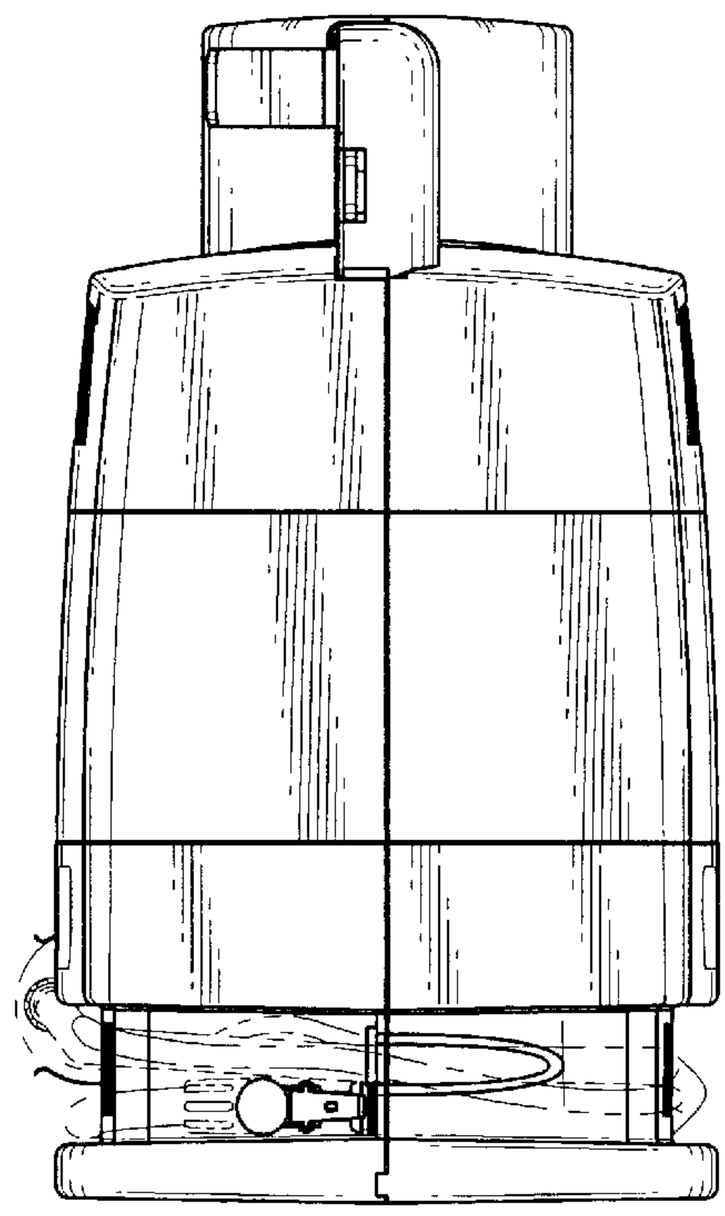

FIG. 3

FIG. 4

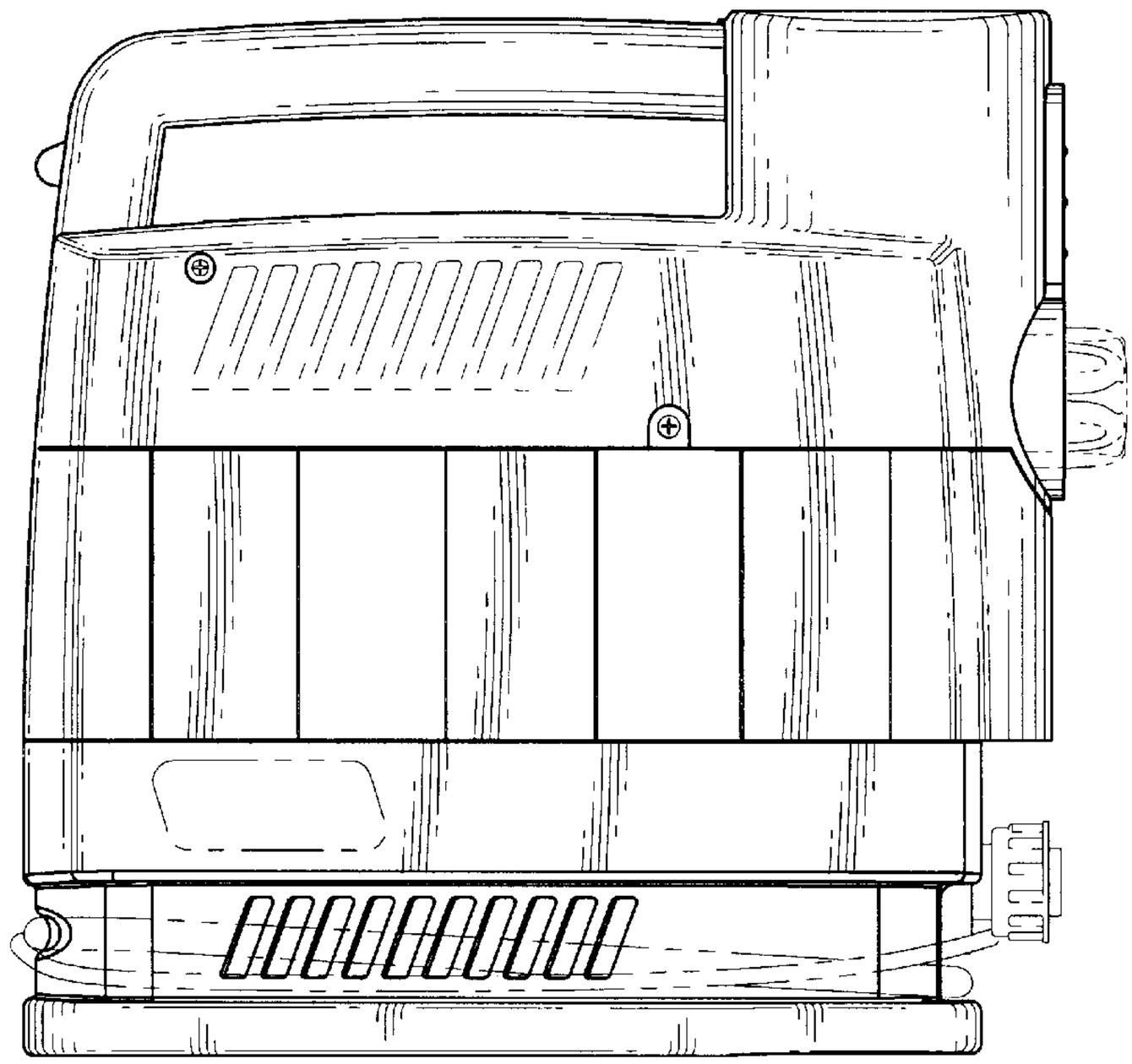

FIG. 5

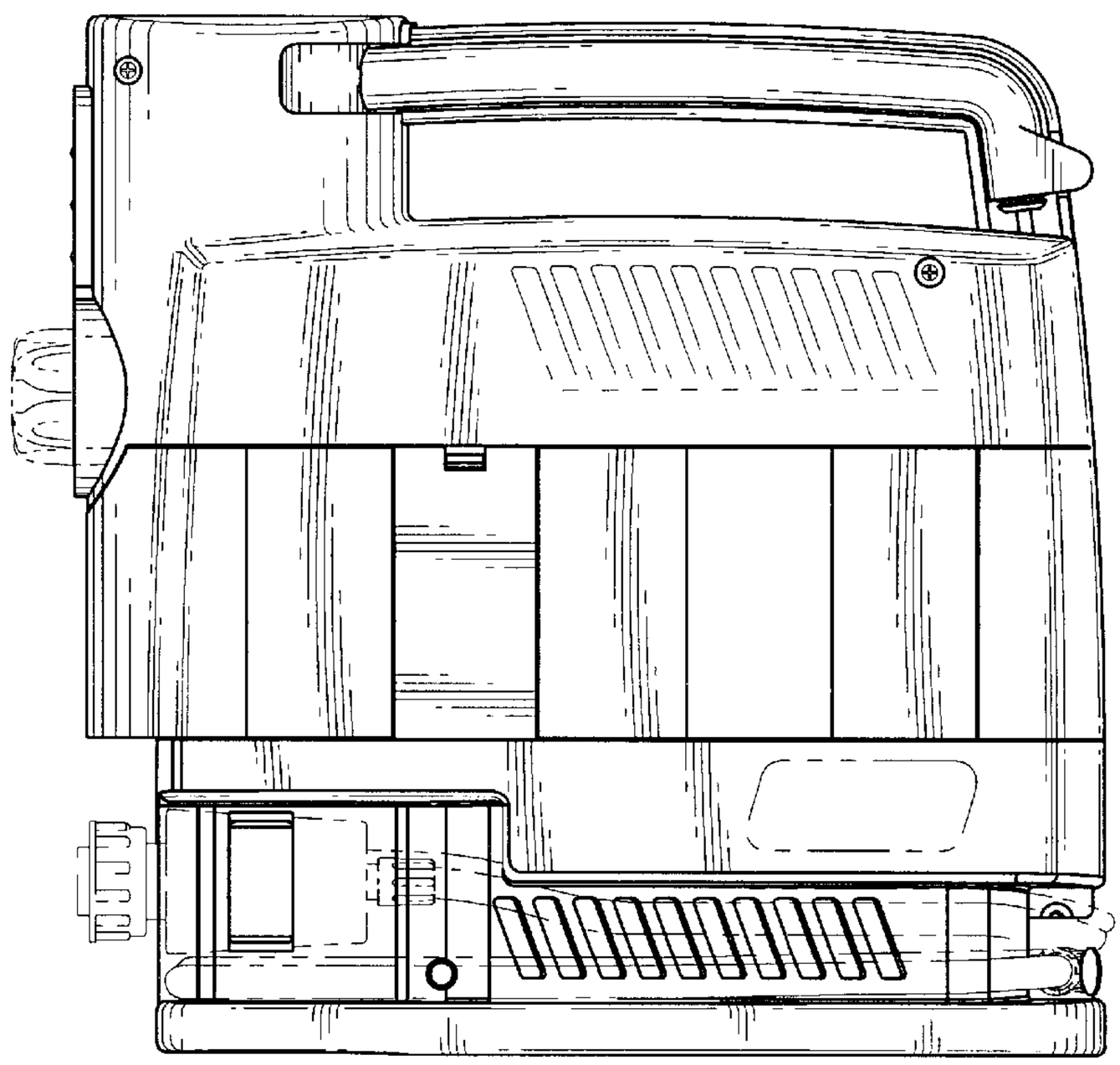

FIG. 6

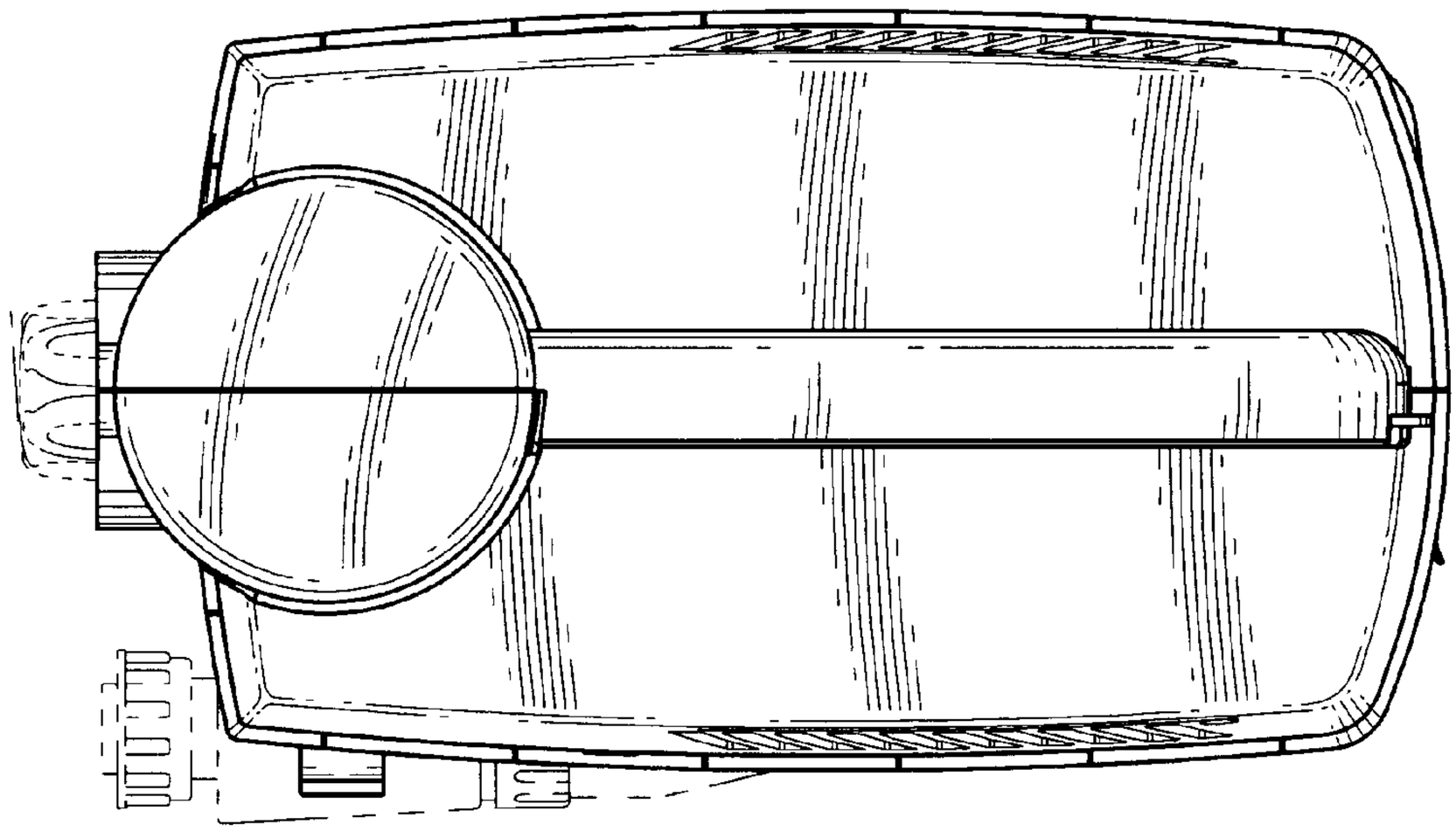
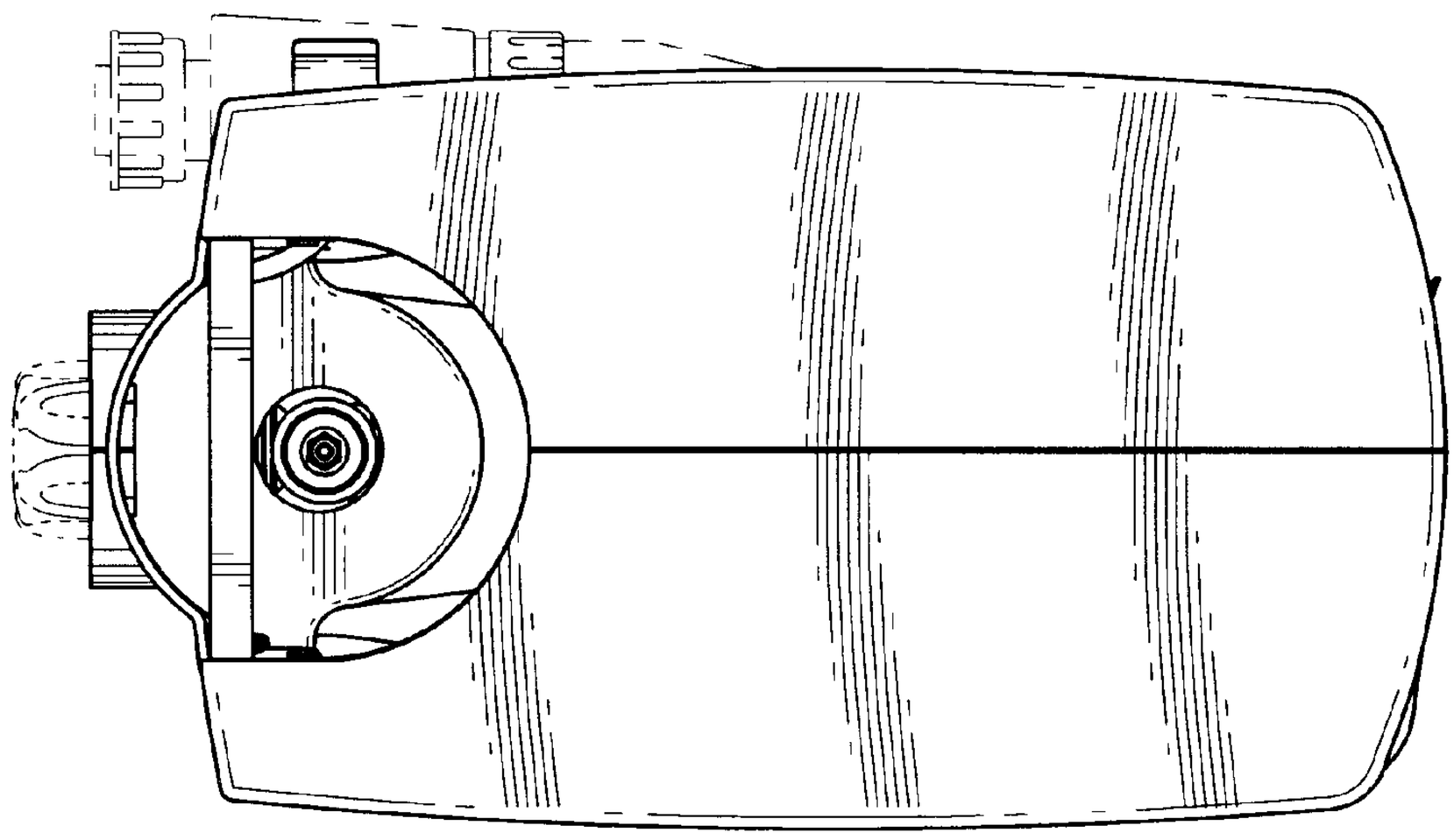
FIG. 7