US00D483442S

(12) United States Design Patent

Leccacorvi

(10) Patent No.: US D483,442 S
(45) Date of Patent: ** Dec. 9, 2003

(54) **HOSE CLAMP WITH TRANSVERSELY ORIENTED TIGHTENING SCREW**

(76) Inventor: **Matthew D. Leccacorvi**, 6 Dartmouth La., Rochester, NH (US) 03867

(**) Term: **14 Years**

(21) Appl. No.: **29/169,509**

(22) Filed: **Oct. 22, 2002**

(51) **LOC (7) Cl.** **23-01**
(52) **U.S. Cl.** **D23/265**
(58) **Field of Search** D23/265; D8/394, D8/396; 285/252, 253; 24/279

(56) **References Cited**

U.S. PATENT DOCUMENTS

732,582	A		6/1903	McKay	
1,425,067	A		8/1922	Stone	
D207,276	S	*	3/1967	Nigon	D8/396
3,924,308	A		12/1975	Duprez	
4,310,956	A		1/1982	Meckstroth et al.	
4,546,524	A	*	10/1985	Kreft	24/274 R
4,558,493	A		12/1985	Dowdell	
4,893,848	A		1/1990	Melcher	
5,315,742	A	*	5/1994	Fay	24/274 R
5,622,391	A	*	4/1997	Belik	285/23
5,706,558	A	*	1/1998	Sauer	24/279
5,761,774	A		6/1998	Champi	
D448,658	S	*	10/2001	Farina	D8/396
D473,783	S	*	4/2003	Kiely	D8/396

* cited by examiner

Primary Examiner—Robin V. Taylor
(74) *Attorney, Agent, or Firm*—Donald R. Schoonover

(57) **CLAIM**

I claim the ornamental design for a hose clamp with transversely oriented tightening screw, as shown and described.

DESCRIPTION

FIG. **1** is a perspective view of a hose clamp with transversely oriented tightening screw showing my new design;
FIG. **2** is a right side elevational view thereof;
FIG. **3** is a left side elevational view thereof;
FIG. **4** is a rear elevational view thereof;
FIG. **5** is a front elevational view thereof;
FIG. **6** is top plan view thereof;
FIG. **7** is a bottom plan view thereof; and,
FIG. **8** is a reduced perspective view showing the hose clamp with transversely oriented tightening screw in use; the broken lines depict environmental structure and form no part of the claimed design.

1 Claim, 3 Drawing Sheets

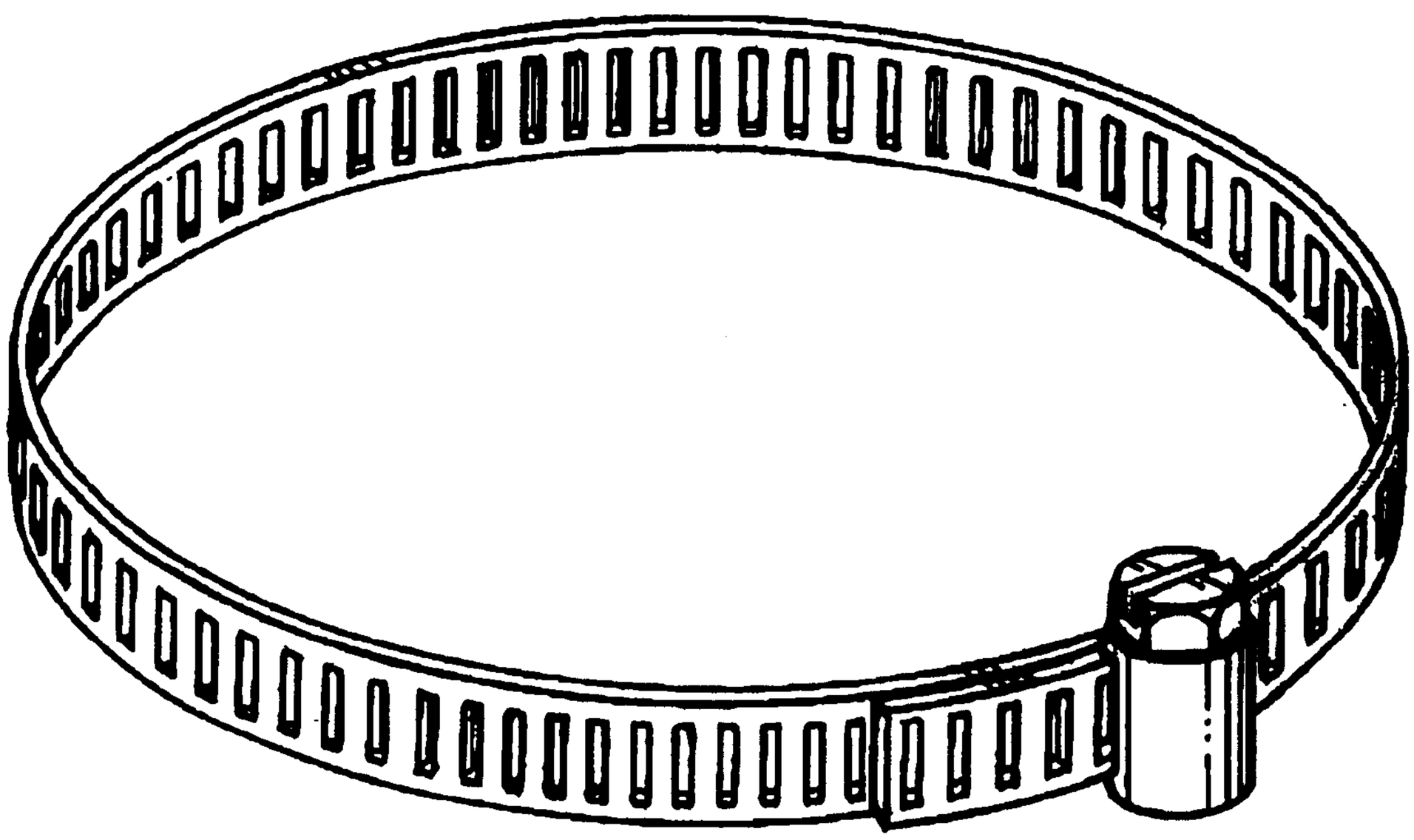

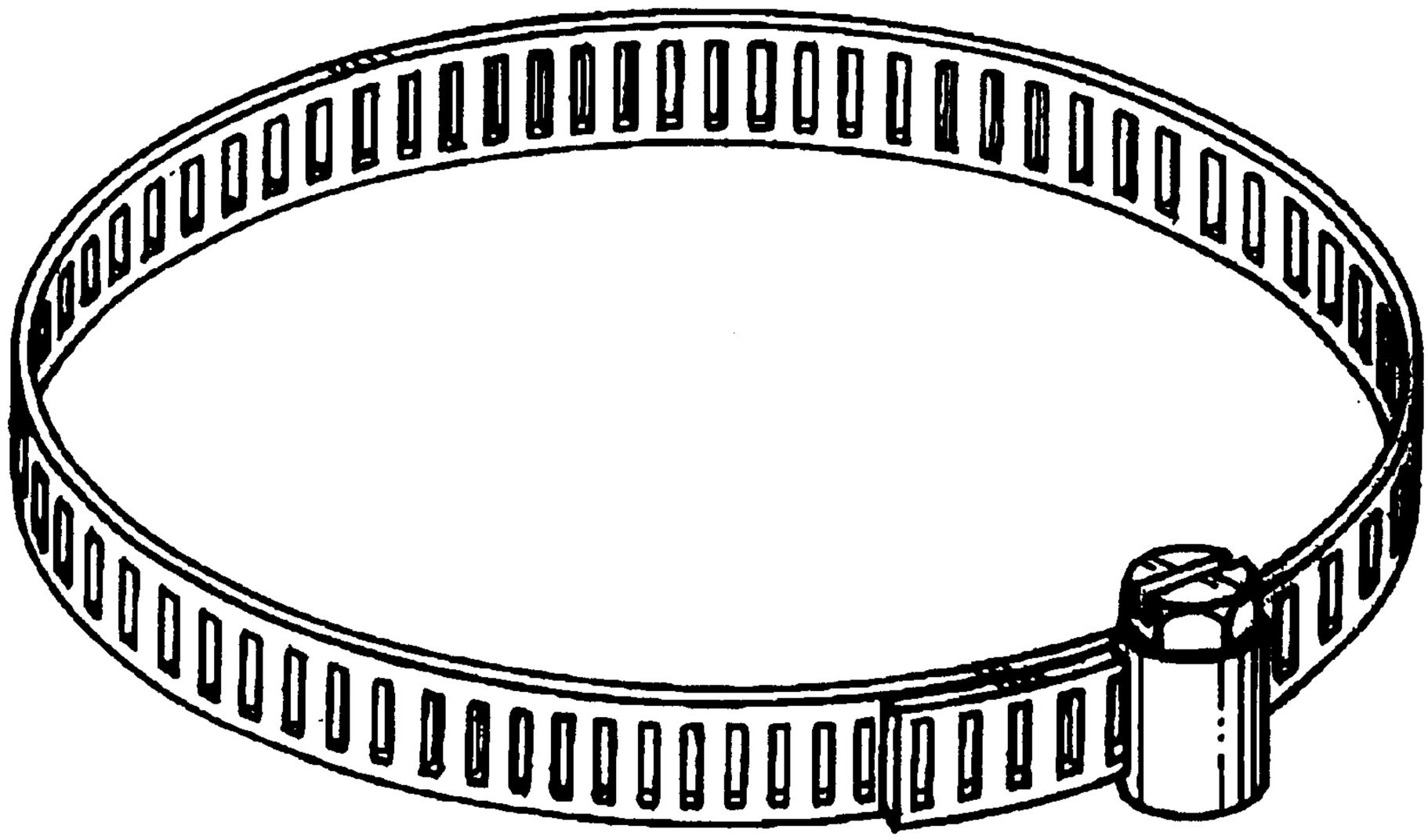

FIG. 1.

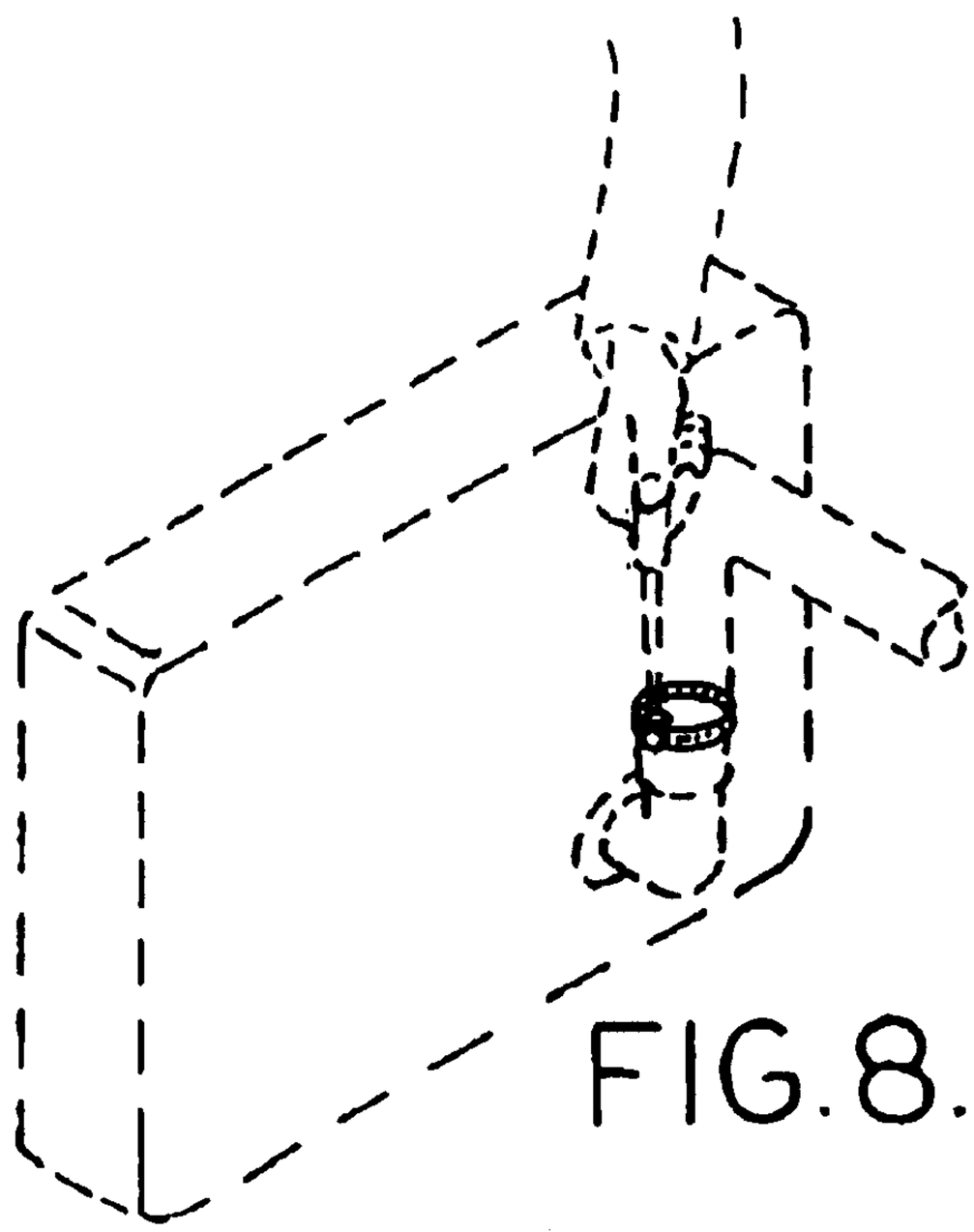

FIG. 8.

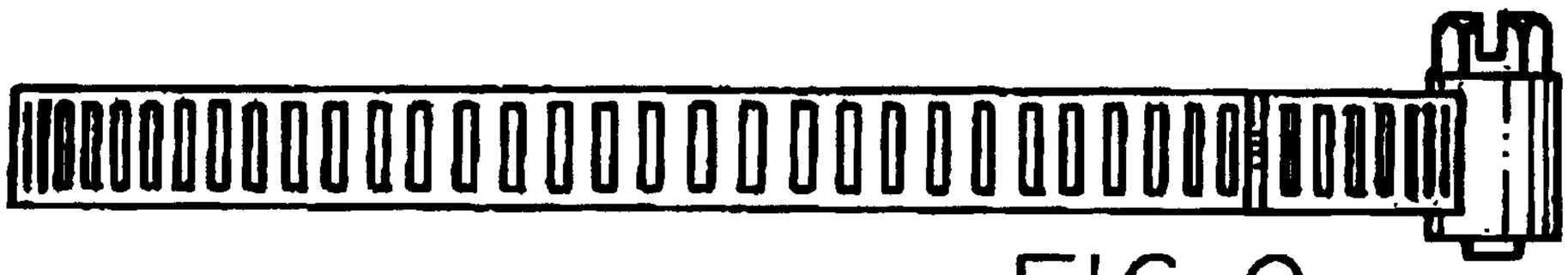

FIG. 2.

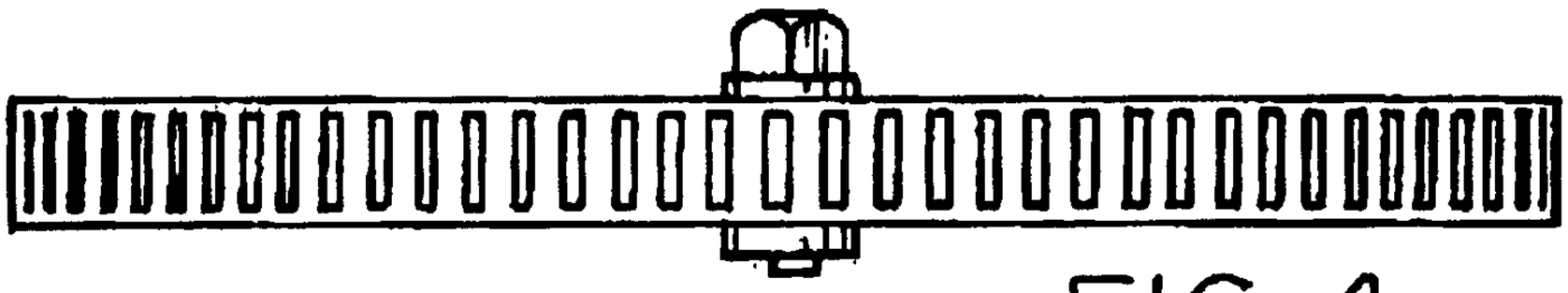

FIG. 4.

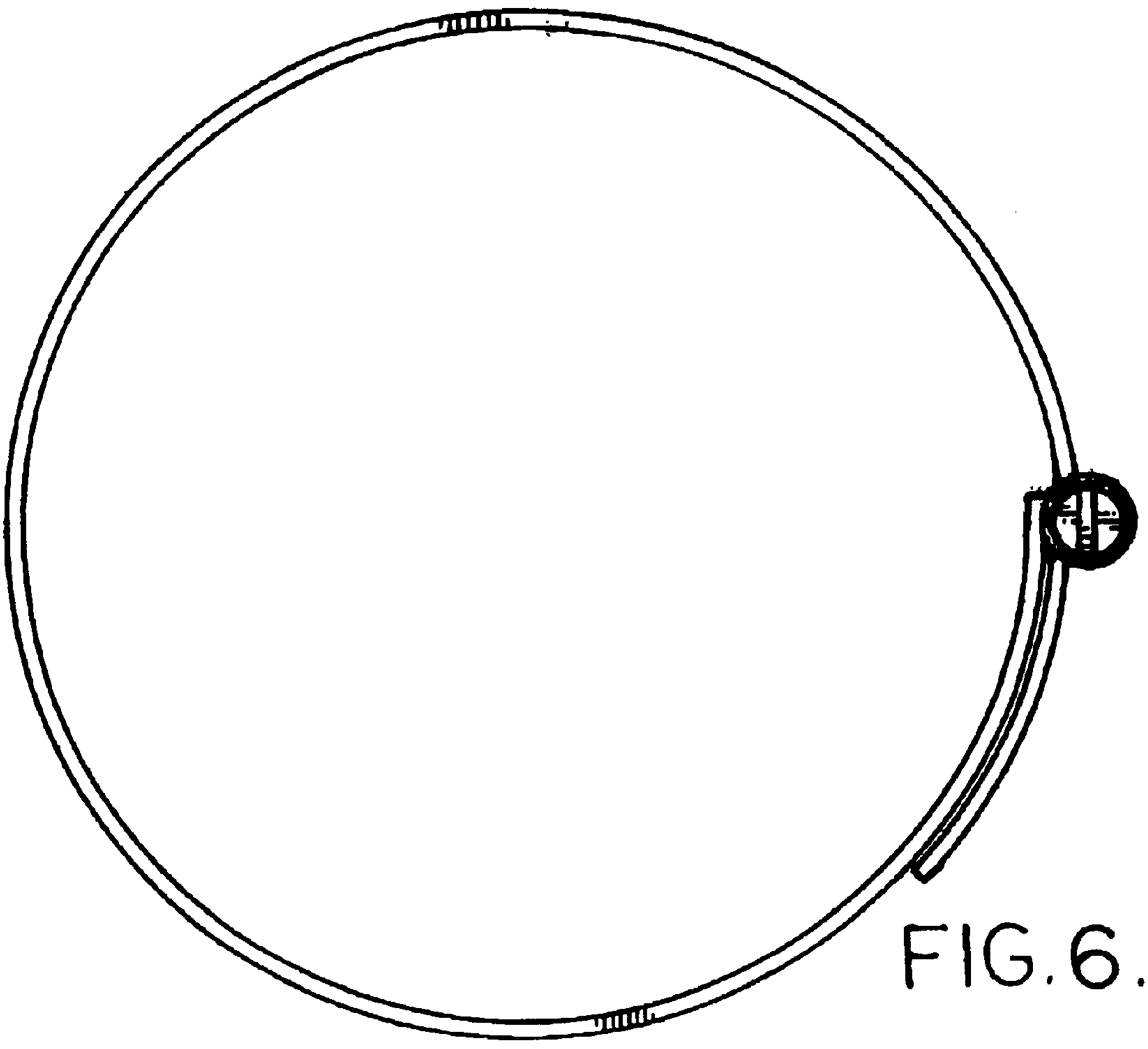

FIG. 6.

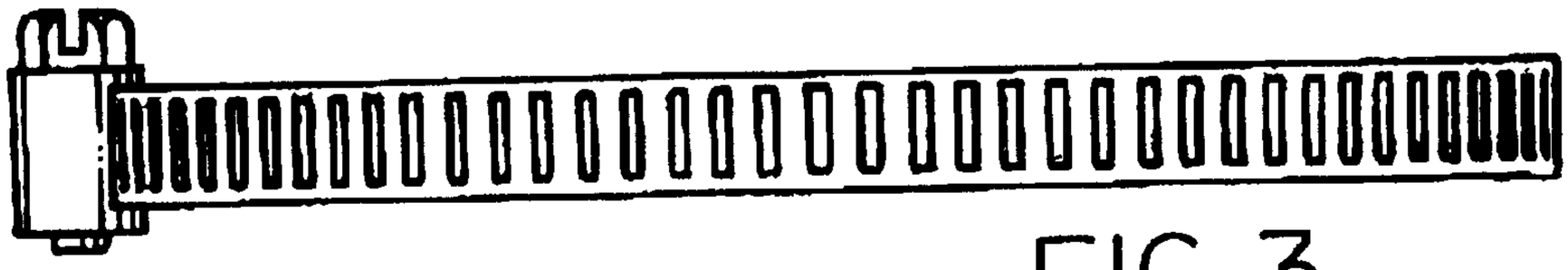

FIG. 3.

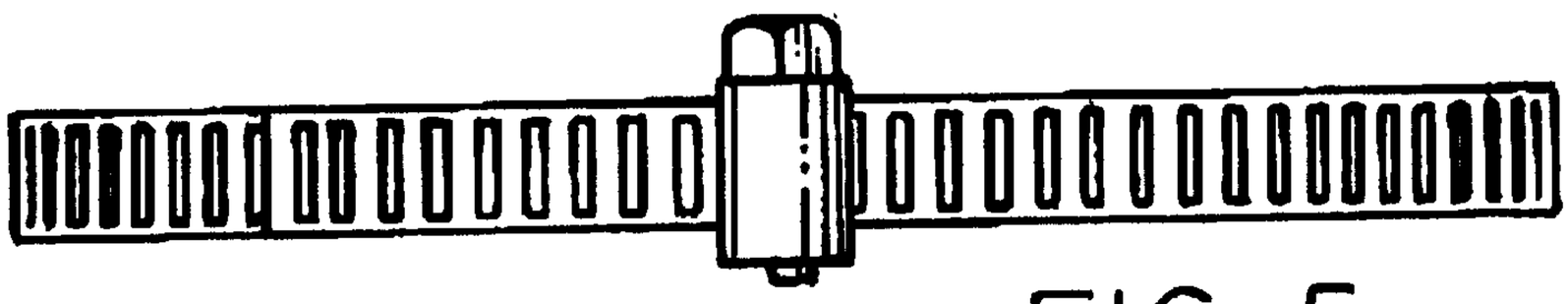

FIG. 5.

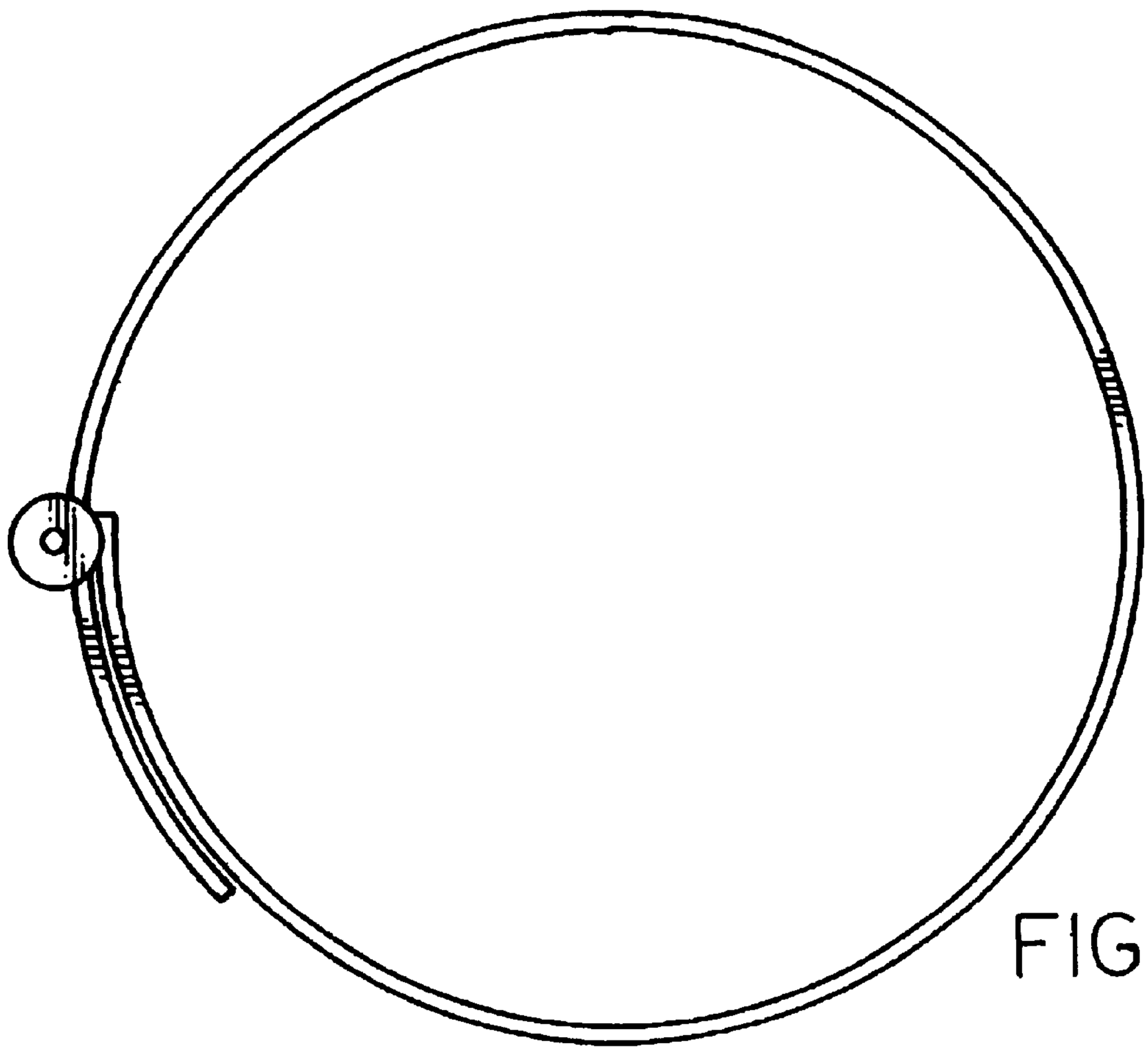

FIG. 7.