US00D482591S

(12) United States Design Patent

Lisle et al.

(10) Patent No.: US D482,591 S
(45) Date of Patent: ** Nov. 25, 2003

(54) **TOOL HANDLE DESIGN**

(75) Inventors: **John C. Lisle**, Clarinda, IA (US); **Kevin L. Tally**, Clarinda, IA (US)

(73) Assignee: **Lisle Corporation**, Clarinda, IA (US)

(**) Term: **14 Years**

(21) Appl. No.: **29/177,079**

(22) Filed: **Mar. 4, 2003**

Related U.S. Application Data

(60) Continuation-in-part of application No. 29/161,191, filed on May 22, 2002, now Pat. No. Des. 475,268, which is a division of application No. 29/153,519, filed on Oct. 19, 2001, now Pat. No. Des. 463,243.

(51) **LOC (7) Cl.** **08-05**
(52) **U.S. Cl.** **D8/107**; D8/83
(58) **Field of Search** D8/82–87, 21–29, D8/107, 303; D7/393, 395, 645; 81/177.1, 489, 436–440; 16/110.1, 421, 422, 430

(56) **References Cited**

U.S. PATENT DOCUMENTS

1,579,498	A	*	4/1926	Anderson	81/439
3,236,275	A	*	2/1966	Smith	81/460
D237,037	S	*	10/1975	Brunosson	D8/47
4,541,314	A	*	9/1985	Korkowski	81/436
4,858,504	A	*	8/1989	Tsai	81/436
D309,246	S		7/1990	Cascio et al.	
D310,011	S		8/1990	Holland-Letz	
D338,825	S	*	8/1993	Brainard	D8/303
D345,685	S	*	4/1994	Lin	D8/303
D360,344	S		7/1995	Eggert et al.	
5,957,014	A		9/1999	Tseng et al.	
D445,658	S		7/2001	Dierolf	
D446,435	S		8/2001	Liao	
D452,423	S		12/2001	Shimansky	

* cited by examiner

Primary Examiner—Clare E. Heflin
(74) *Attorney, Agent, or Firm*—Banner & Witcoff, Ltd.

(57) **CLAIM**

The ornamental design for a tool handle design, substantially as shown and described.

DESCRIPTION

FIG. **1** is an isometric view of the tool handle design of the invention;
FIG. **2** is a side elevation of the tool handle of FIG. **1**;
FIG. **3** is an end view of the tool handle of FIG. **2**; and,
FIG. **4** is a top plan view of the tool handle of FIG. **2**.

1 Claim, 1 Drawing Sheet

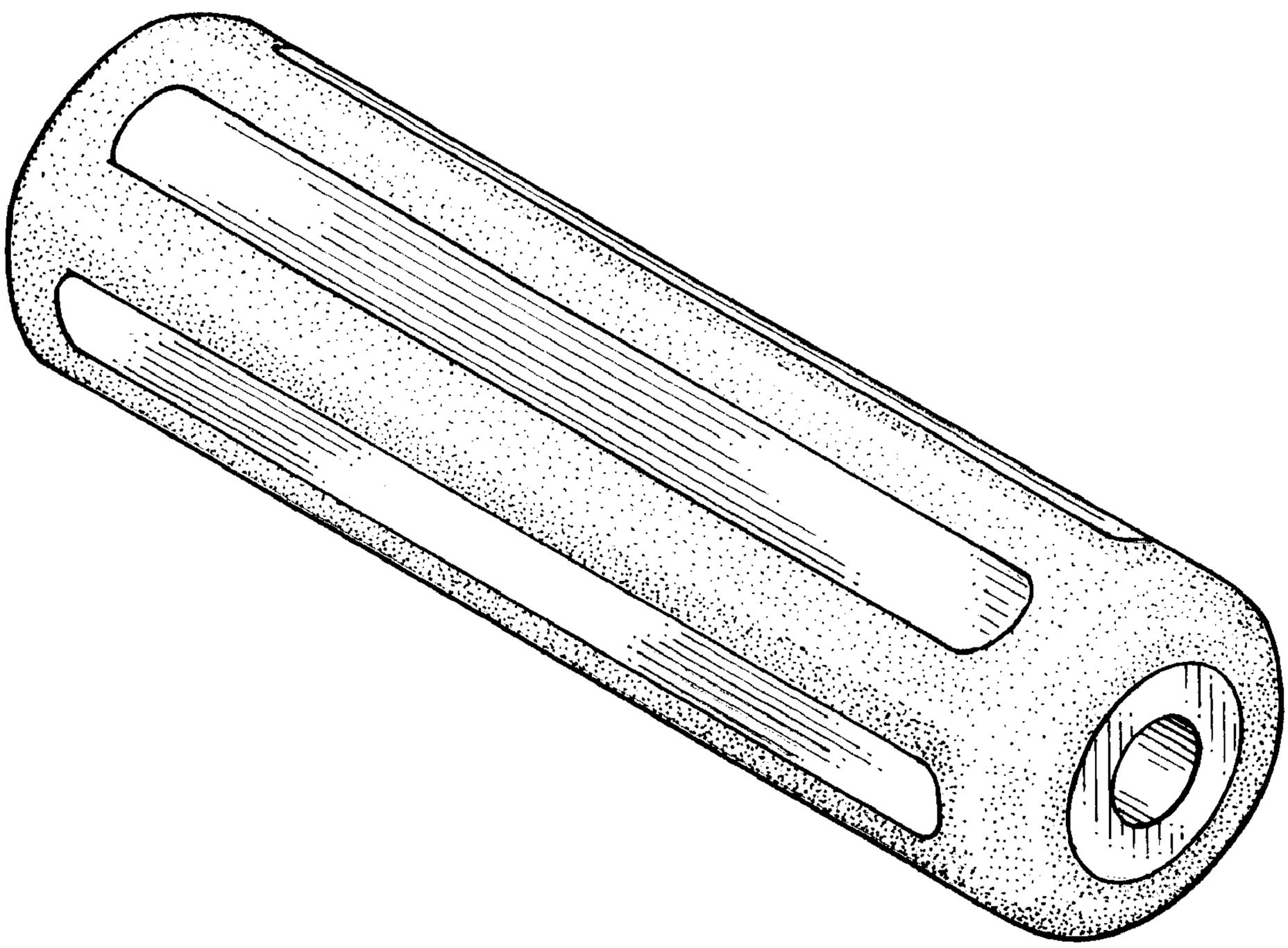

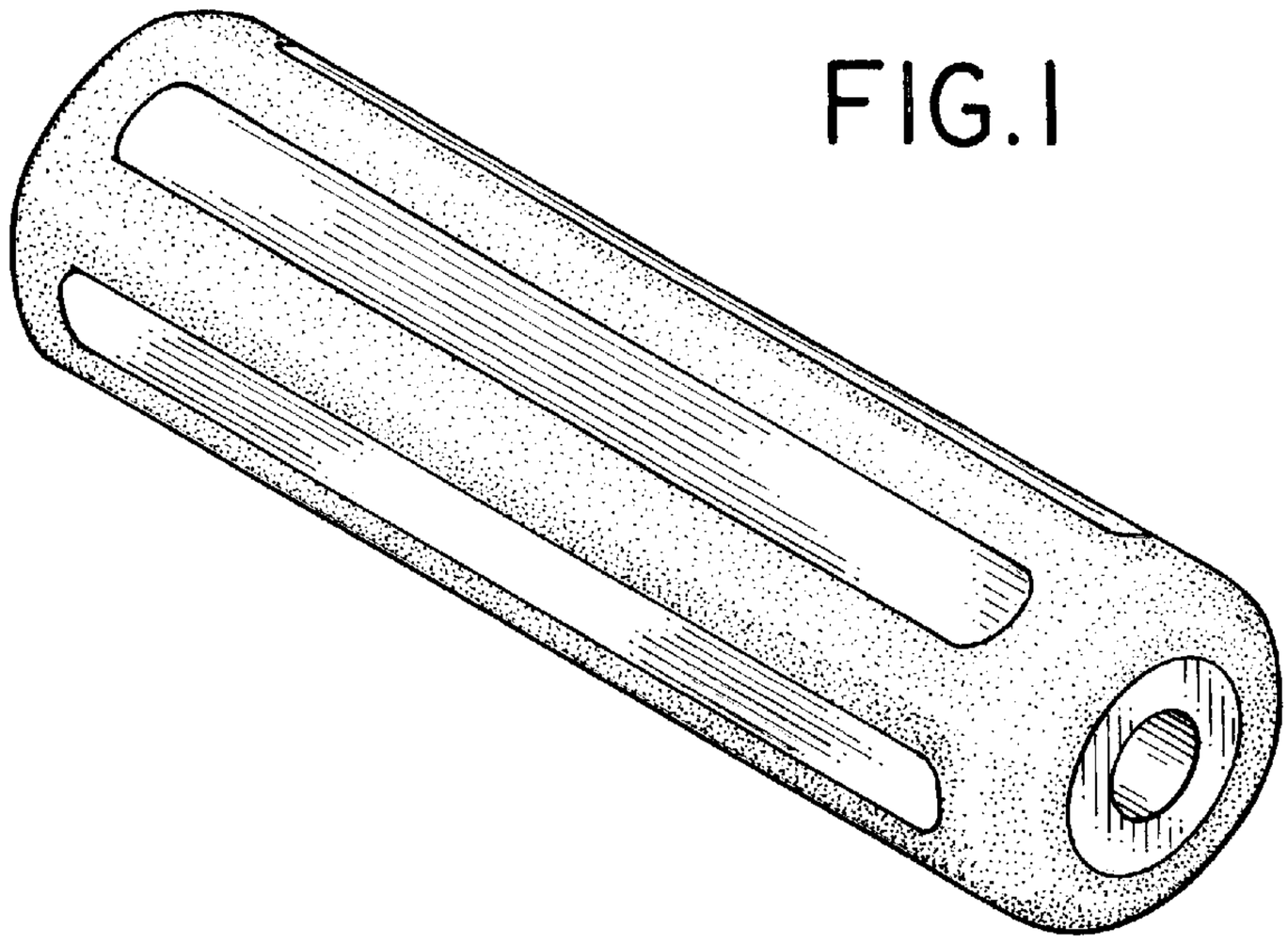

FIG. 1

FIG. 2

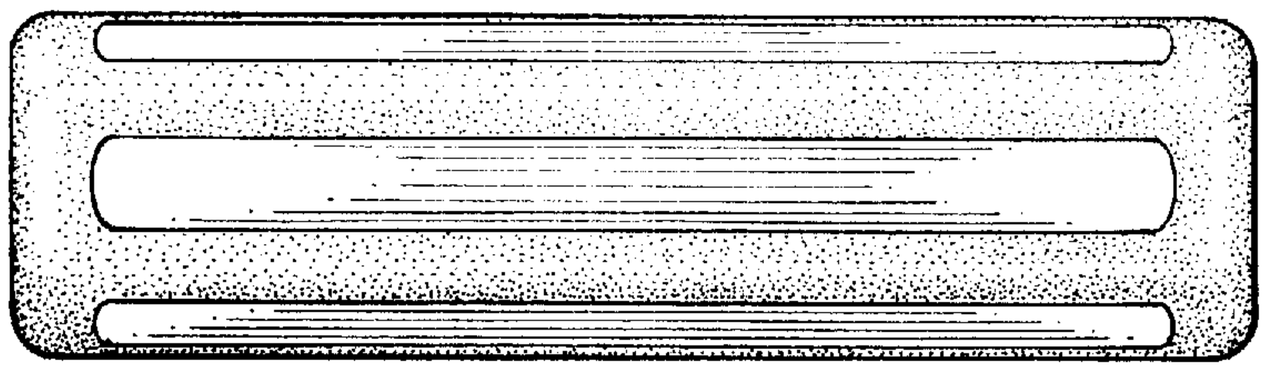

FIG. 3

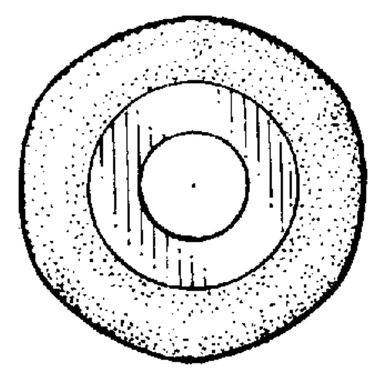

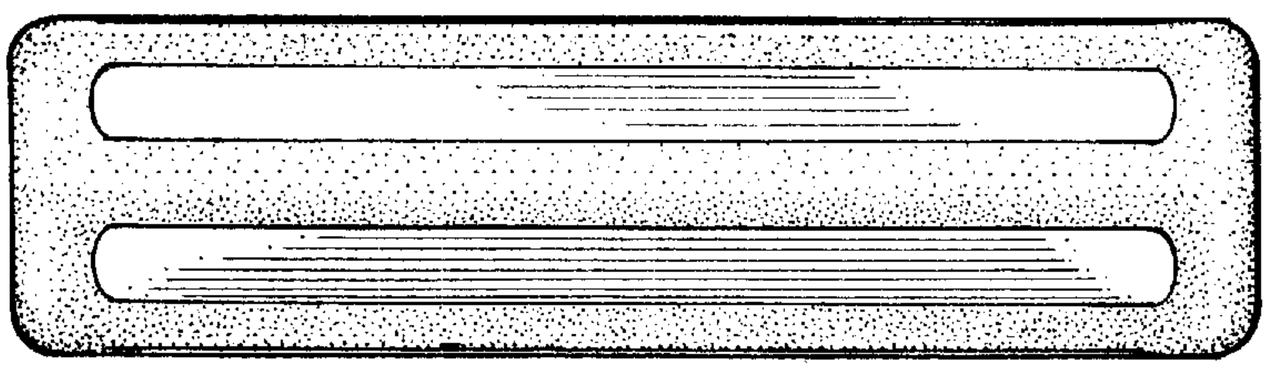

FIG. 4