US00D482090S

(12) United States Design Patent

Burrows

(10) Patent No.: US D482,090 S
(45) Date of Patent: ** Nov. 11, 2003

(54) **WOOD TYPE HEAD FOR A GOLF CLUB**

(75) Inventor: **Bruce D. Burrows**, Santa Clarita, CA (US)

(73) Assignee: **Burrows Golf, Inc.**, Valencia, CA (US)

(**) Term: **14 Years**

(21) Appl. No.: **29/173,719**

(22) Filed: **Jan. 2, 2003**

(51) **LOC (7) Cl.** **21-02**
(52) **U.S. Cl.** **D21/752**
(58) **Field of Search** D21/733, 752; 473/324–331, 345, 346

(56) **References Cited**

U.S. PATENT DOCUMENTS

4,065,133	A	*	12/1977	Gordos	473/327
D266,344	S	*	9/1982	Duclos	D21/752
D344,772	S	*	3/1994	Long et al.	D21/752
D354,324	S	*	1/1995	Stites, III	D21/752
D371,815	S	*	7/1996	Kenmi	D21/752
D371,817	S	*	7/1996	Olsavsky et al.	D21/752
D382,612	S	*	8/1997	Oyer	D21/752
D385,003	S	*	10/1997	Burrows	D21/752
D413,952	S	*	9/1999	Oyer	D21/752

* cited by examiner

Primary Examiner—Mitchell Siegel
(74) *Attorney, Agent, or Firm*—Kelly Bauersfeld Lowry & Kelley, LLP

(57) **CLAIM**

The ornamental design for a wood type head for a golf club, as shown and described.

DESCRIPTION

FIG. **1** is a perspective view showing the bottom, front and toe end sides of a wood type for a golf club embodying the new design;
FIG. **2** is a front elevational view thereof;
FIG. **3** is a toe end elevational view thereof;
FIG. **4** is a heel end elevational view thereof;
FIG. **5** is a rear elevational view thereof;
FIG. **6** is a top plan view thereof;
FIG. **7** is a bottom plan view thereof;
FIG. **8** is a toe end elevational view of a wood type golf club head in accordance with a second embodiment of the new design; and,
FIG. **9** is a bottom plan view of the embodiment of FIG. **9**.
The undisclosed sides of the second embodiment are identical to those shown of the first embodiment.
The broken line showings of a fragmented golf club shaft and a faceplate groove pattern are for illustrative purposes only and form no part of the claimed design.

1 Claim, 5 Drawing Sheets

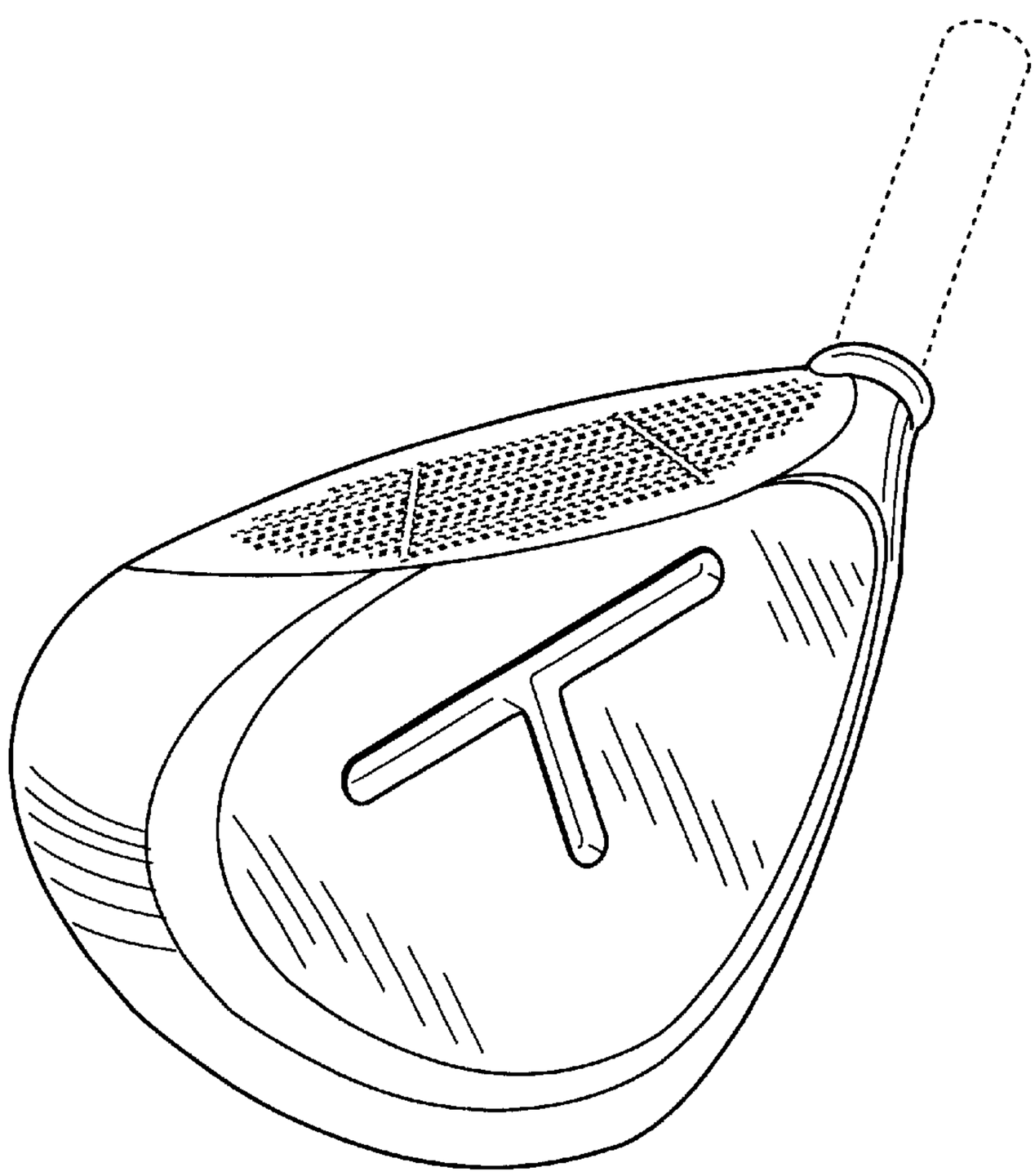

FIG. 1

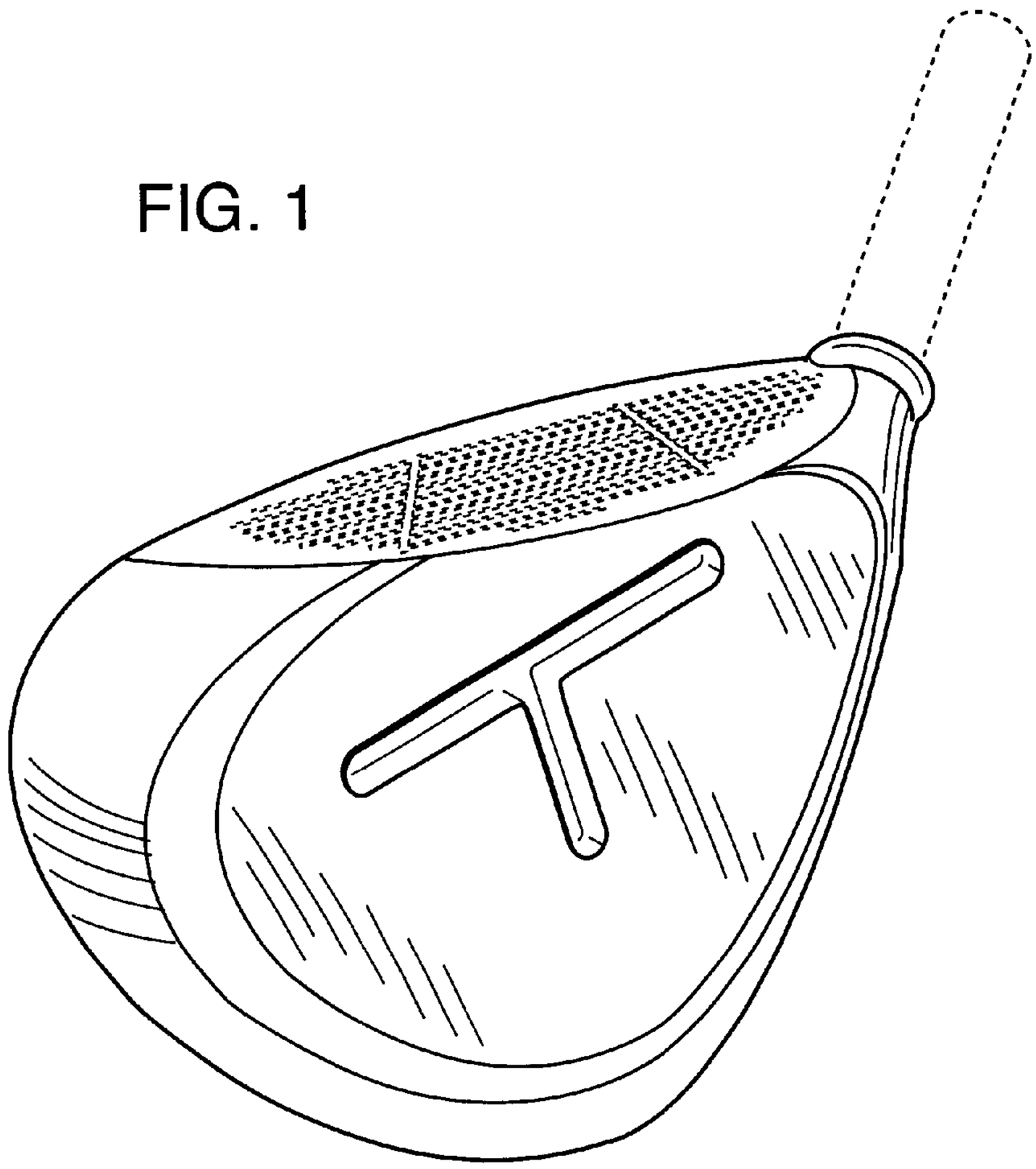

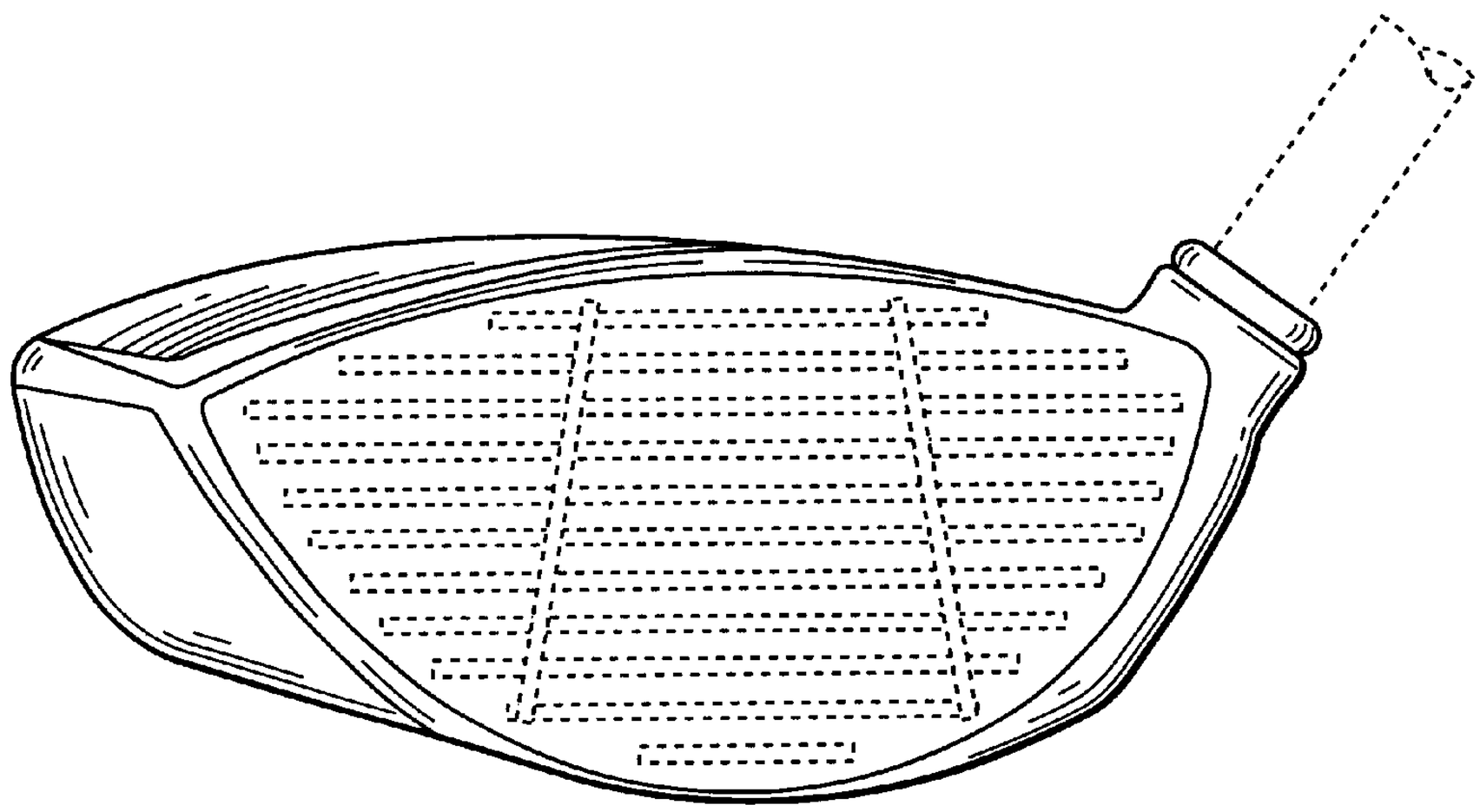

FIG. 2

FIG. 3

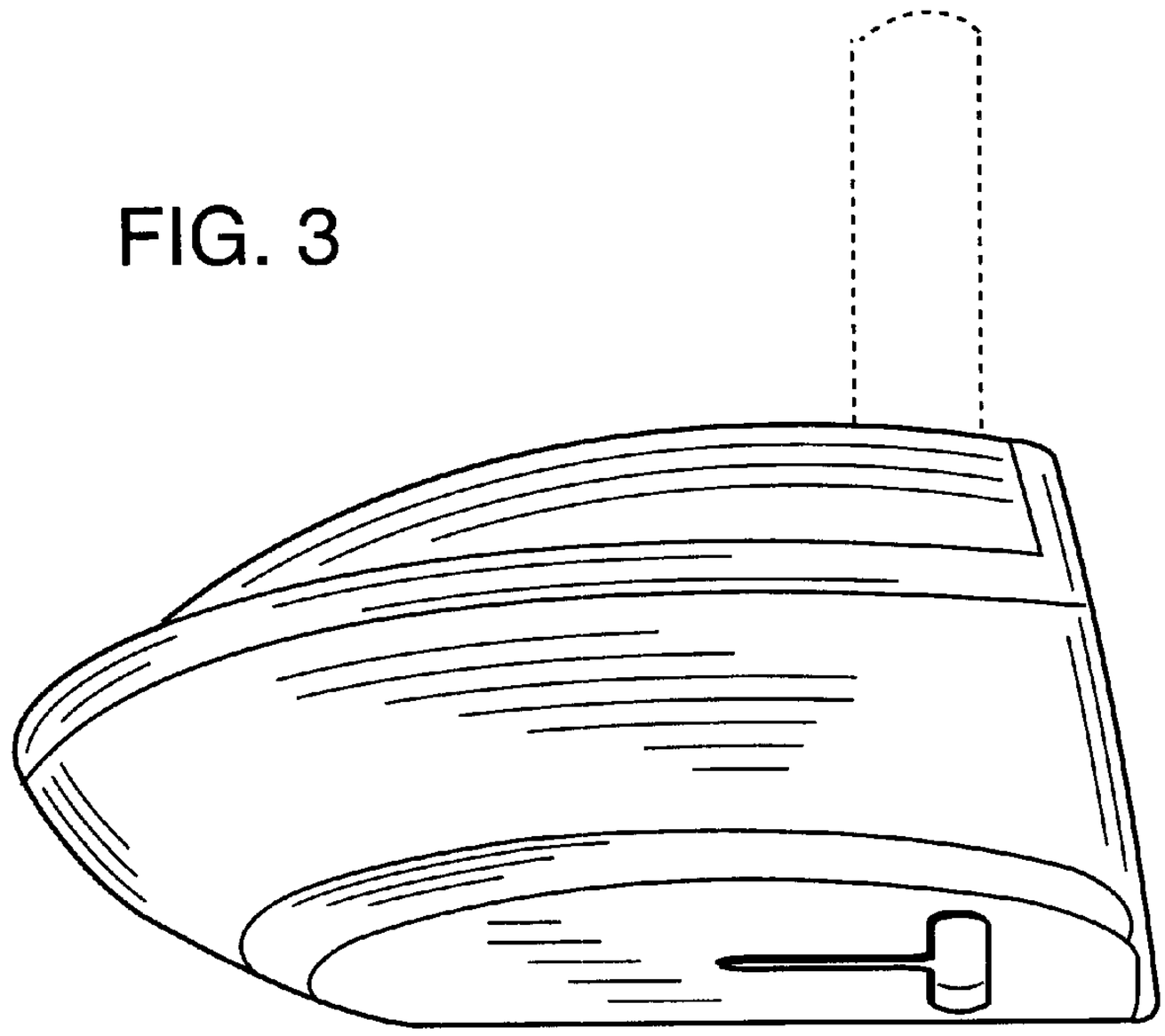

FIG. 4

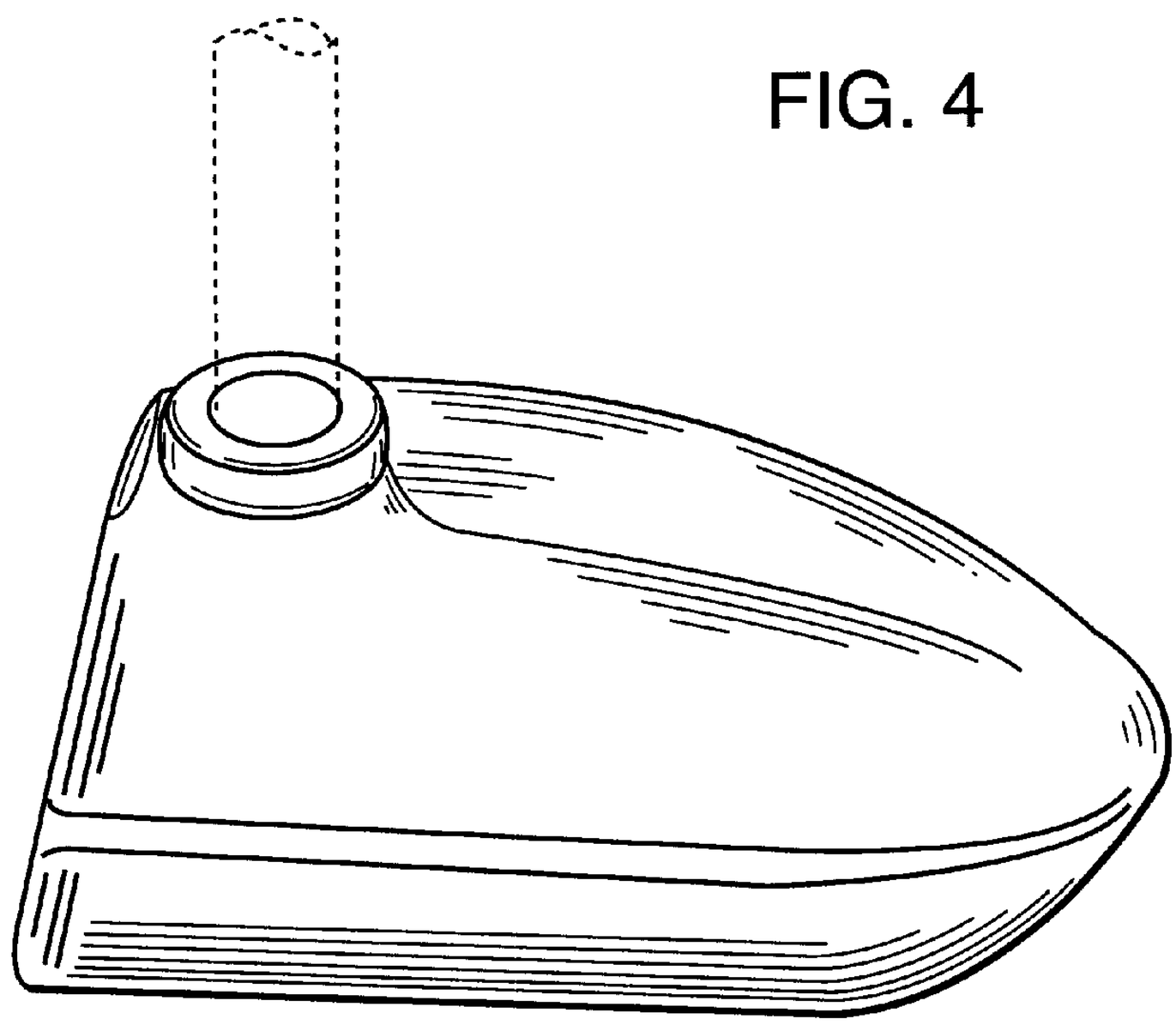

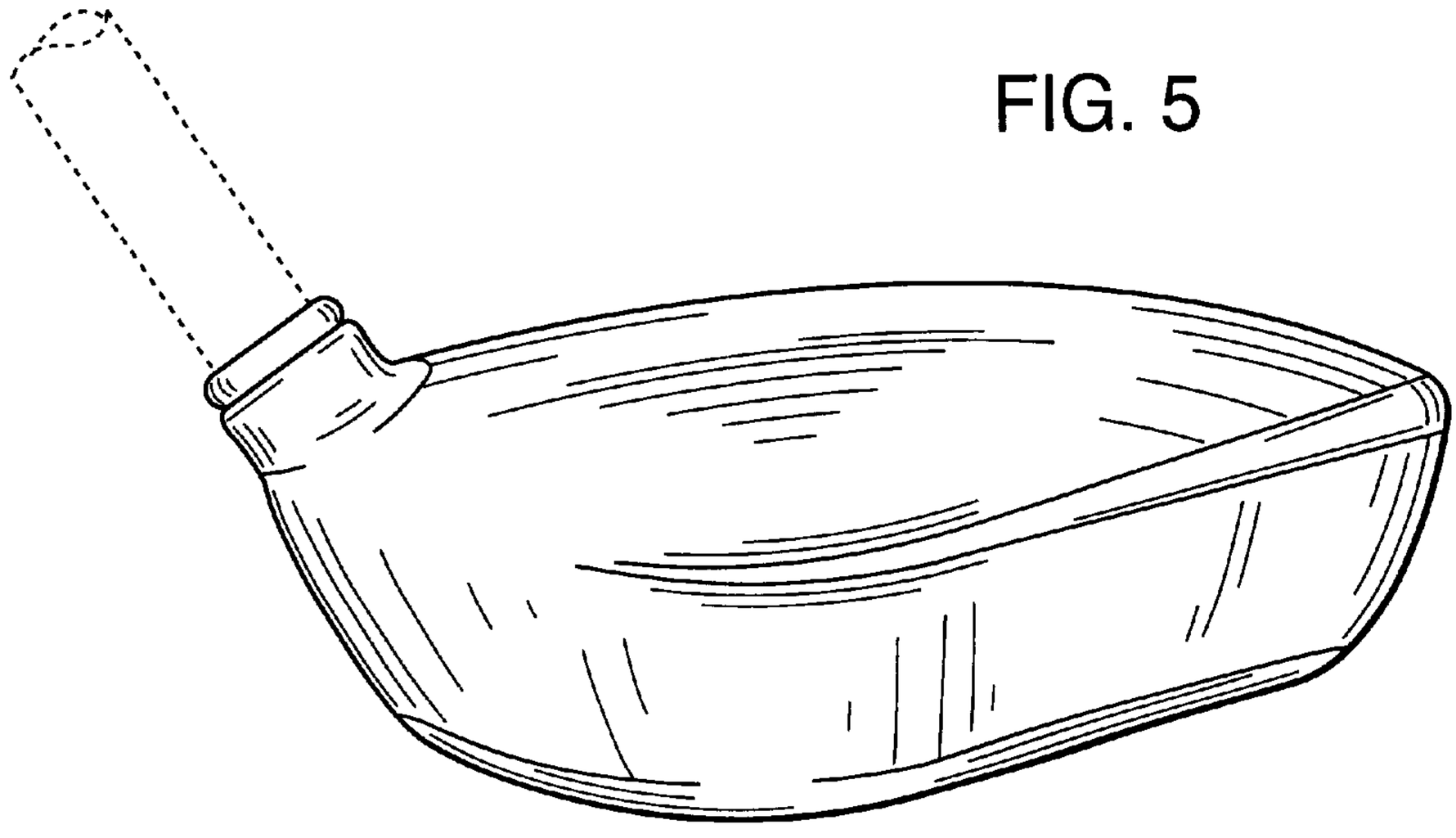

FIG. 5

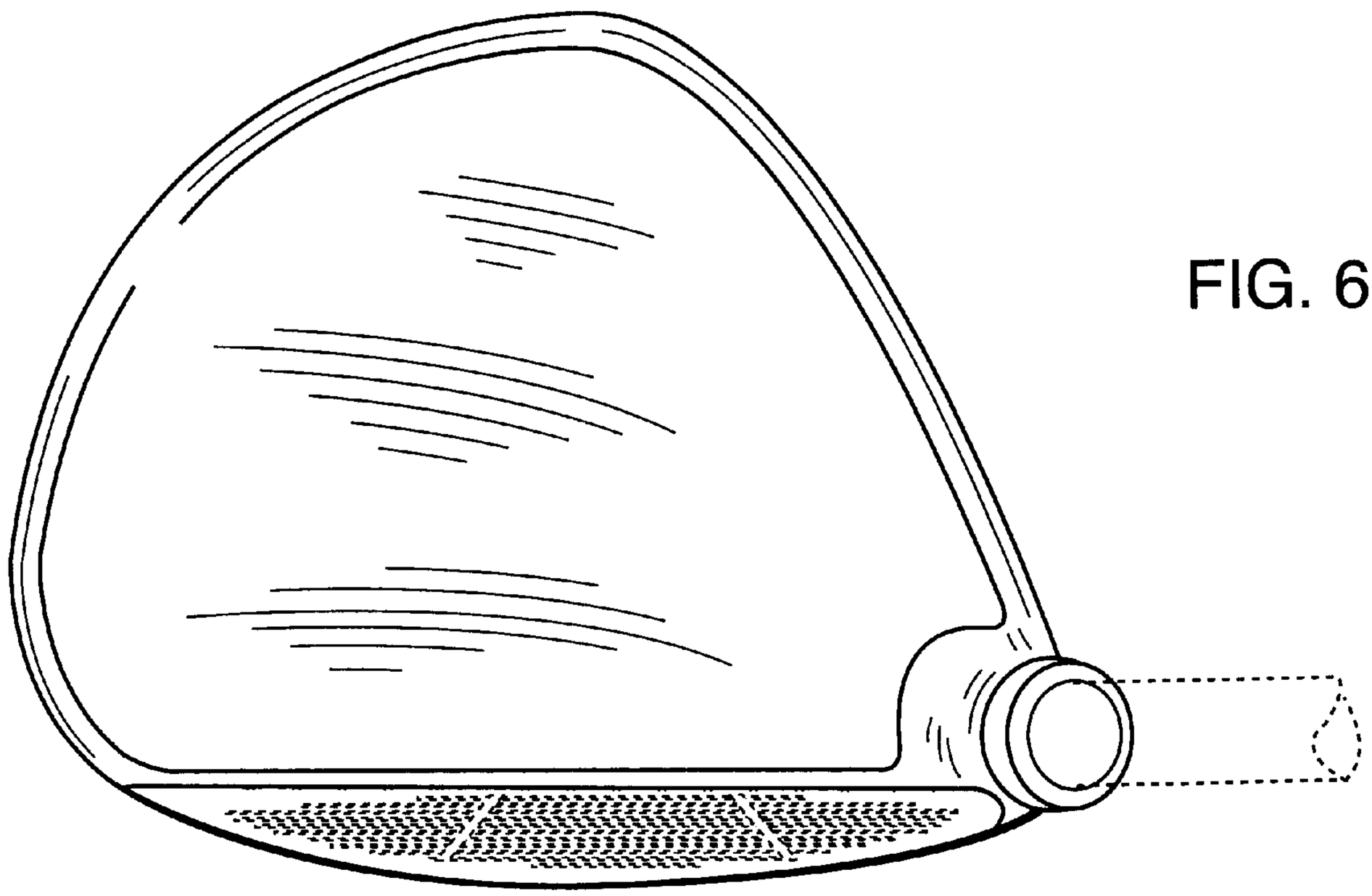

FIG. 6

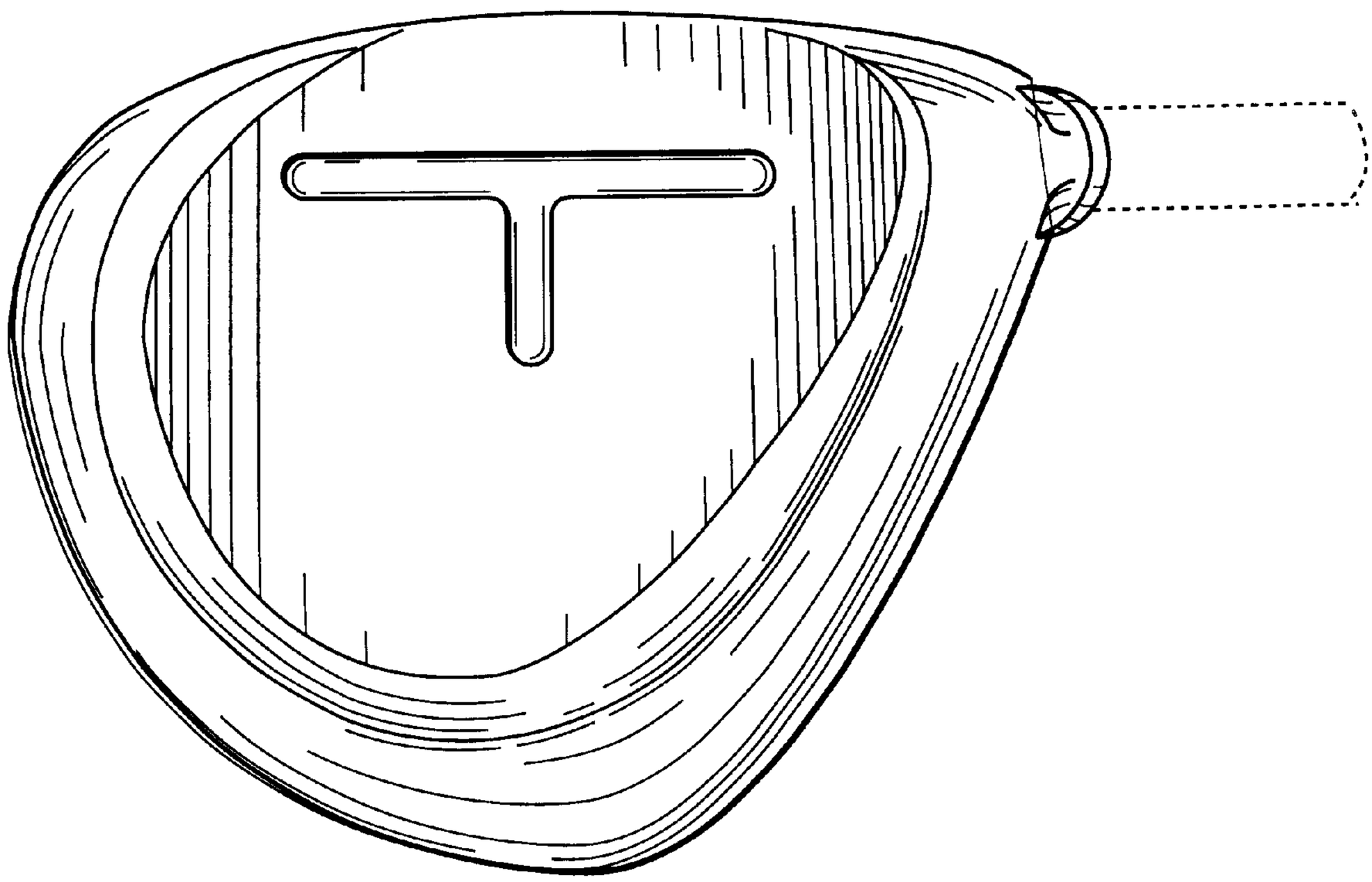

FIG. 7

FIG. 8

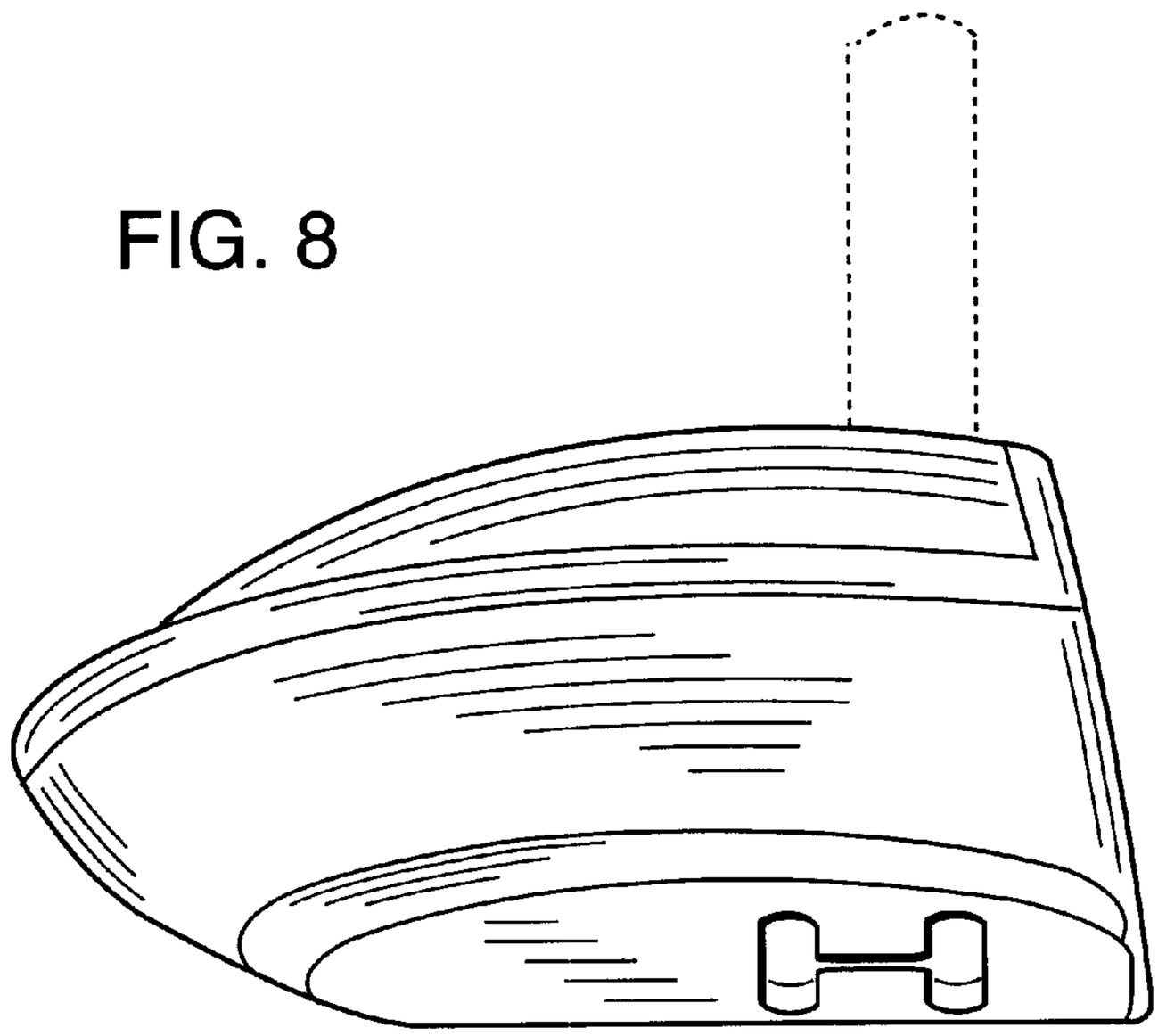

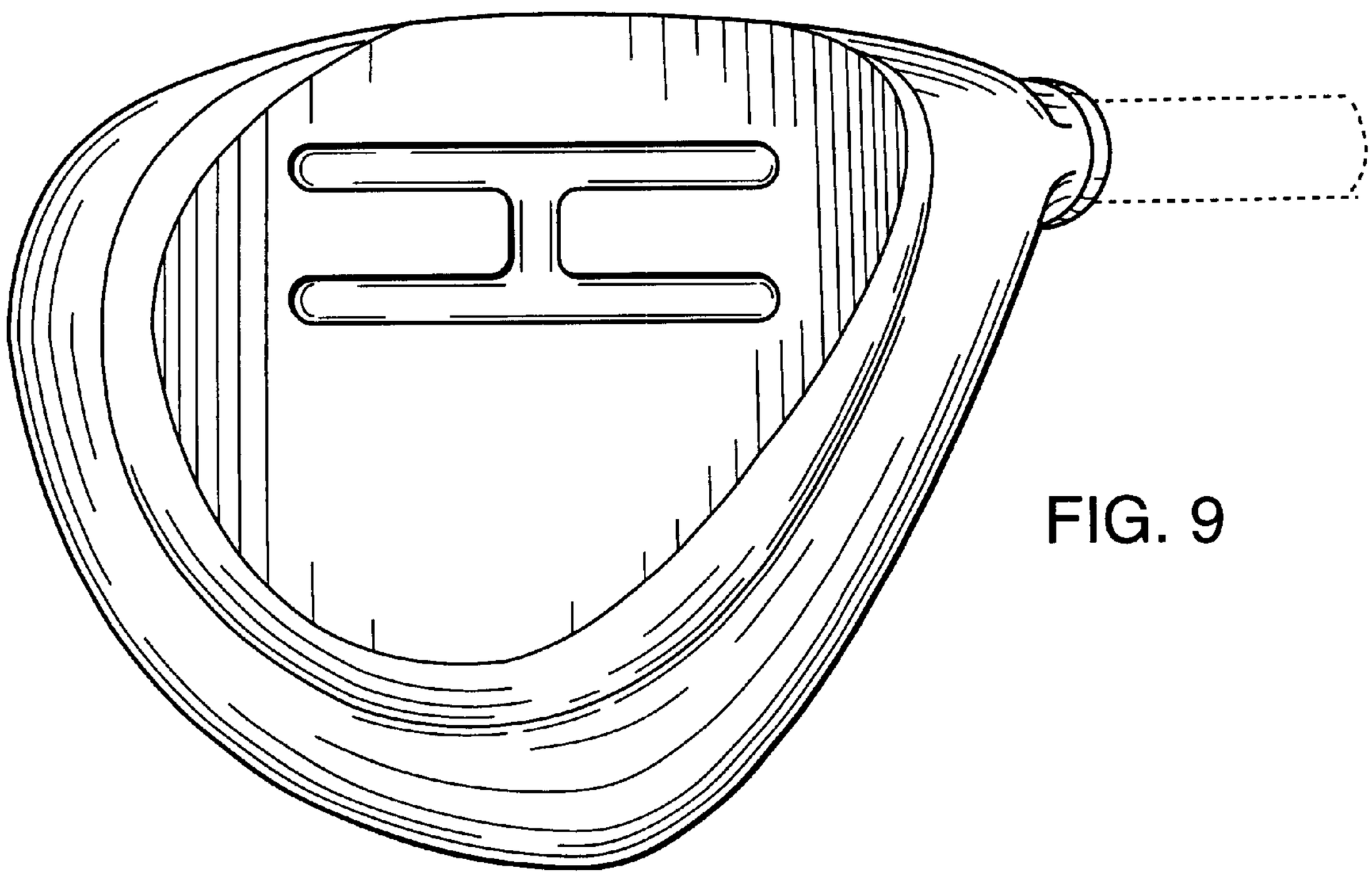

FIG. 9