US00D480796S

(12) United States Design Patent

Young

(10) Patent No.: US D480,796 S
(45) Date of Patent: ** Oct. 14, 2003

(54) **COMBINATION CEILING FAN BLADE AND BLADE ATTACHMENT ASSEMBLY**

(75) Inventor: **Stanfield Young**, Cypress, CA (US)

(73) Assignee: **Minka Lighting, Inc.**, Coronoa, CA (US)

(**) Term: **14 Years**

(21) Appl. No.: **29/163,995**

(22) Filed: **Jul. 15, 2002**

(51) **LOC (7) Cl.** **23-04**
(52) **U.S. Cl.** **D23/411**
(58) **Field of Search** ..... D23/411, 413, D23/377, 379, 385; 416/5, 210 R; 392/364

(56) **References Cited**

U.S. PATENT DOCUMENTS

D408,904 S * 4/1999 Liu D23/377
D417,494 S * 12/1999 Evans D23/377
D424,187 S * 5/2000 Lo D23/377

OTHER PUBLICATIONS

Minka Lighting, Inc.; MinkaAire Two Thousand Two; Apr. 22, 2002; pp. 2, 3; Minka Lighting, Inc.; U.S.A.

* cited by examiner

Primary Examiner—Lisa Lichtenstein
(74) *Attorney, Agent, or Firm*—Jenkens & Gilchrist, P.C.

(57) **CLAIM**

The ornamental design for a combination ceiling fan blade and blade attachment assembly, as shown and described.

DESCRIPTION

FIG. **1** is a perspective view from below of the combination ceiling fan blade and blade attachment assembly in accordance with my design, including the environment thereof;

FIG. **2** is a bottom plan view of the combination ceiling fan blade and blade attachment assembly in accordance with my design, on a reduced scale including the environment thereof;

FIG. **3** is a front elevation view of the combination ceiling fan blade and blade attachment assembly in accordance with my design, on a reduced scale including the environment thereof;

FIG. **4** is a perspective view from above of the combination ceiling fan blade and blade attachment assembly in accordance with my design;

FIG. **5** is a left side elevation of the combination ceiling fan blade and blade attachment assembly in accordance with my design;

FIG. **6** is a right side elevation view of the bottom side of the combination ceiling fan blade and blade attachment assembly in accordance with my design, turned upright for purposes of illustration;

FIG. **7** is a front end view of the combination ceiling fan blade and blade attachment assembly in accordance with my design; and,

FIG. **8** is a rear end view of the combination ceiling fan blade and blade attachment assembly in accordance with my design.

The broken line showing of environmental structure in FIGS. **1–3** is for illustrative purposes only and forms no part of the claimed design.

1 Claim, 3 Drawing Sheets

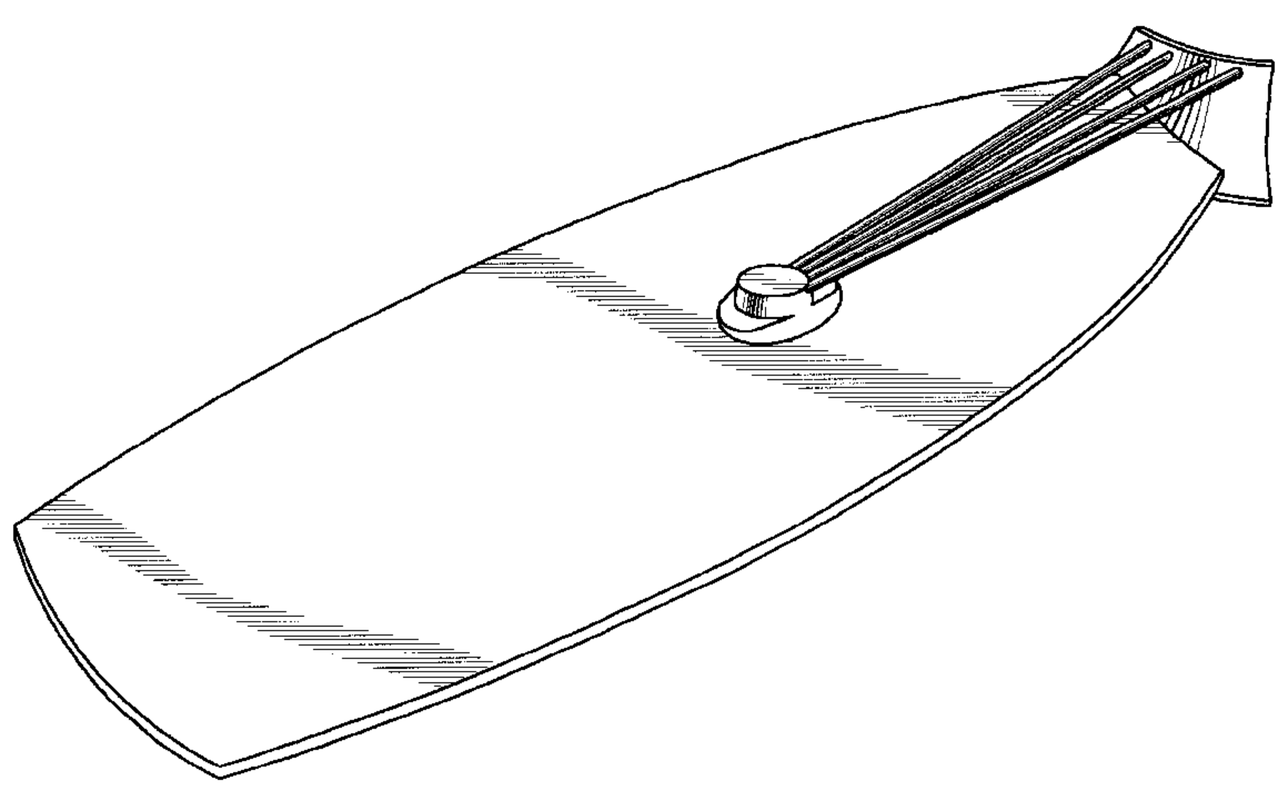

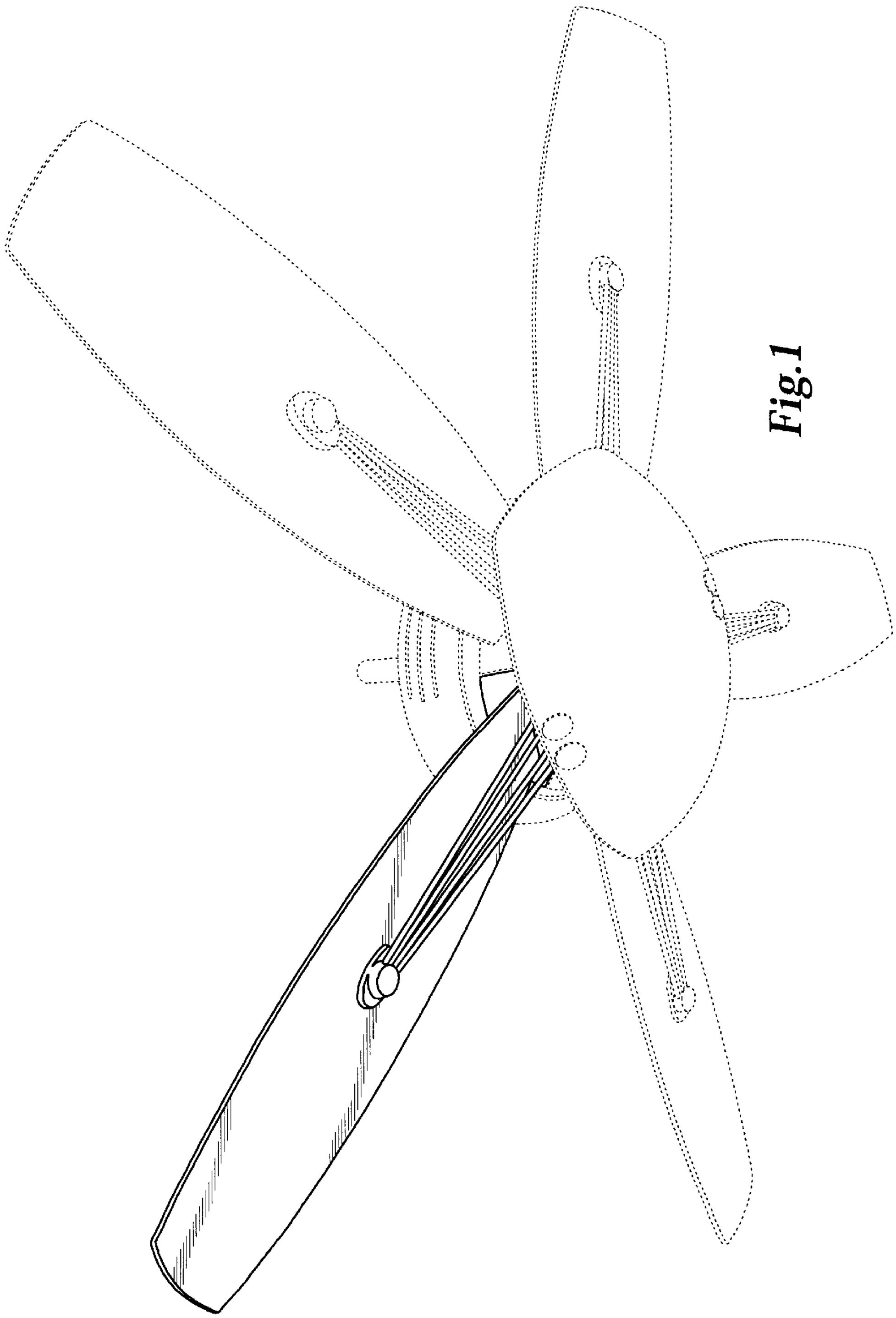

Fig.1

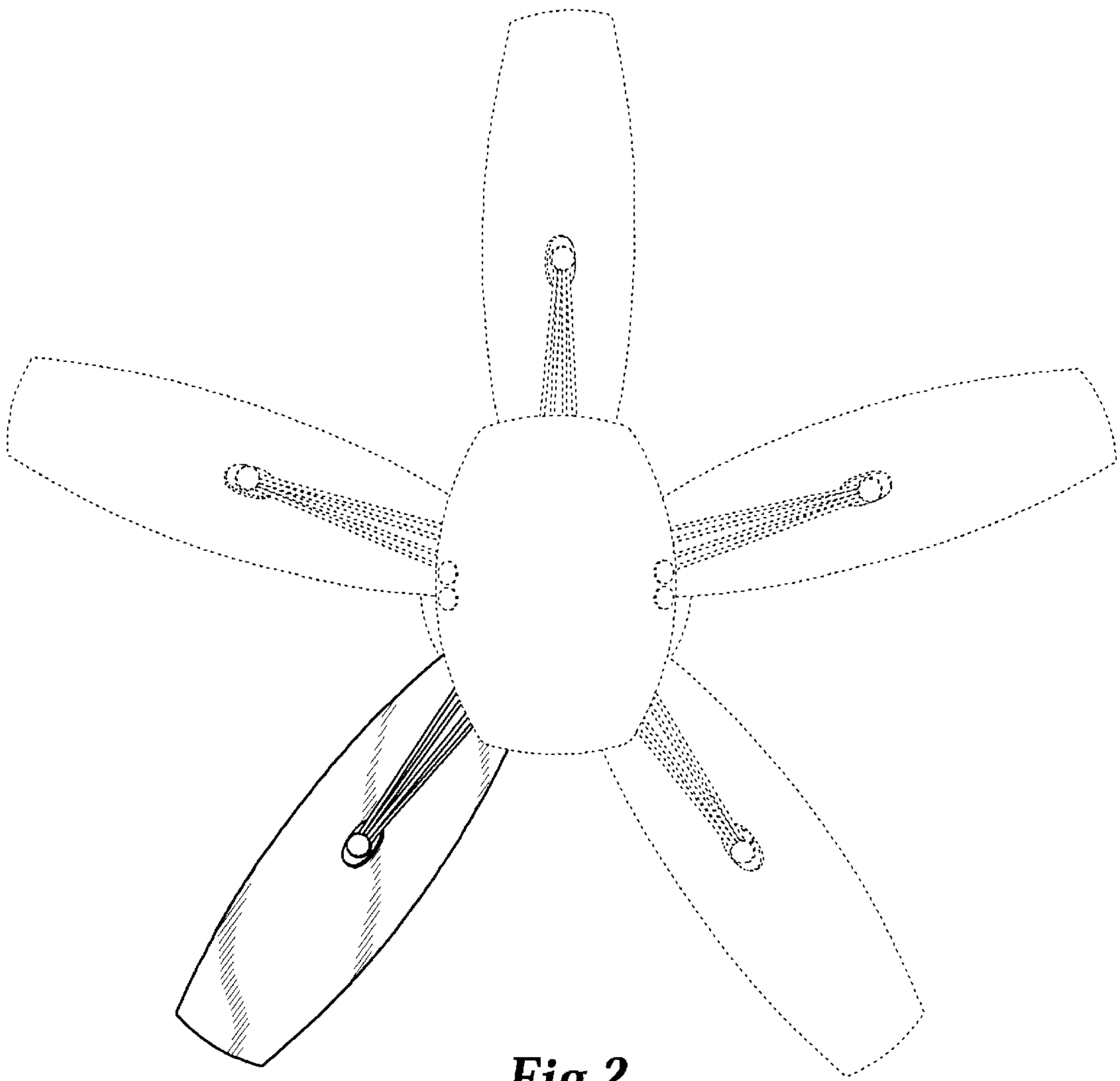

Fig.2

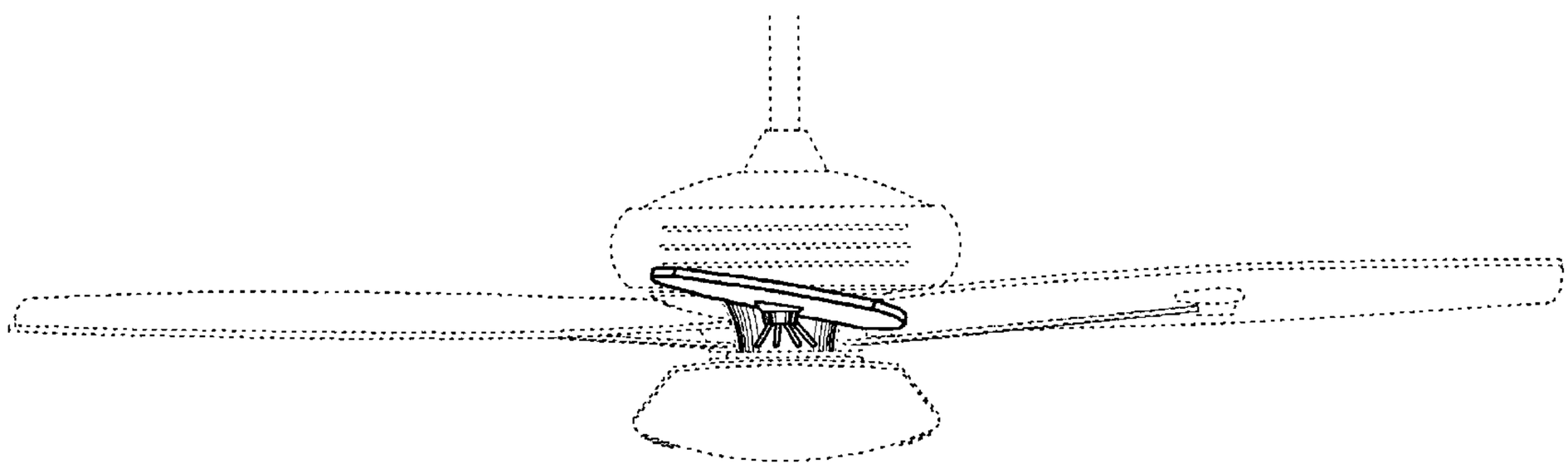

Fig.3

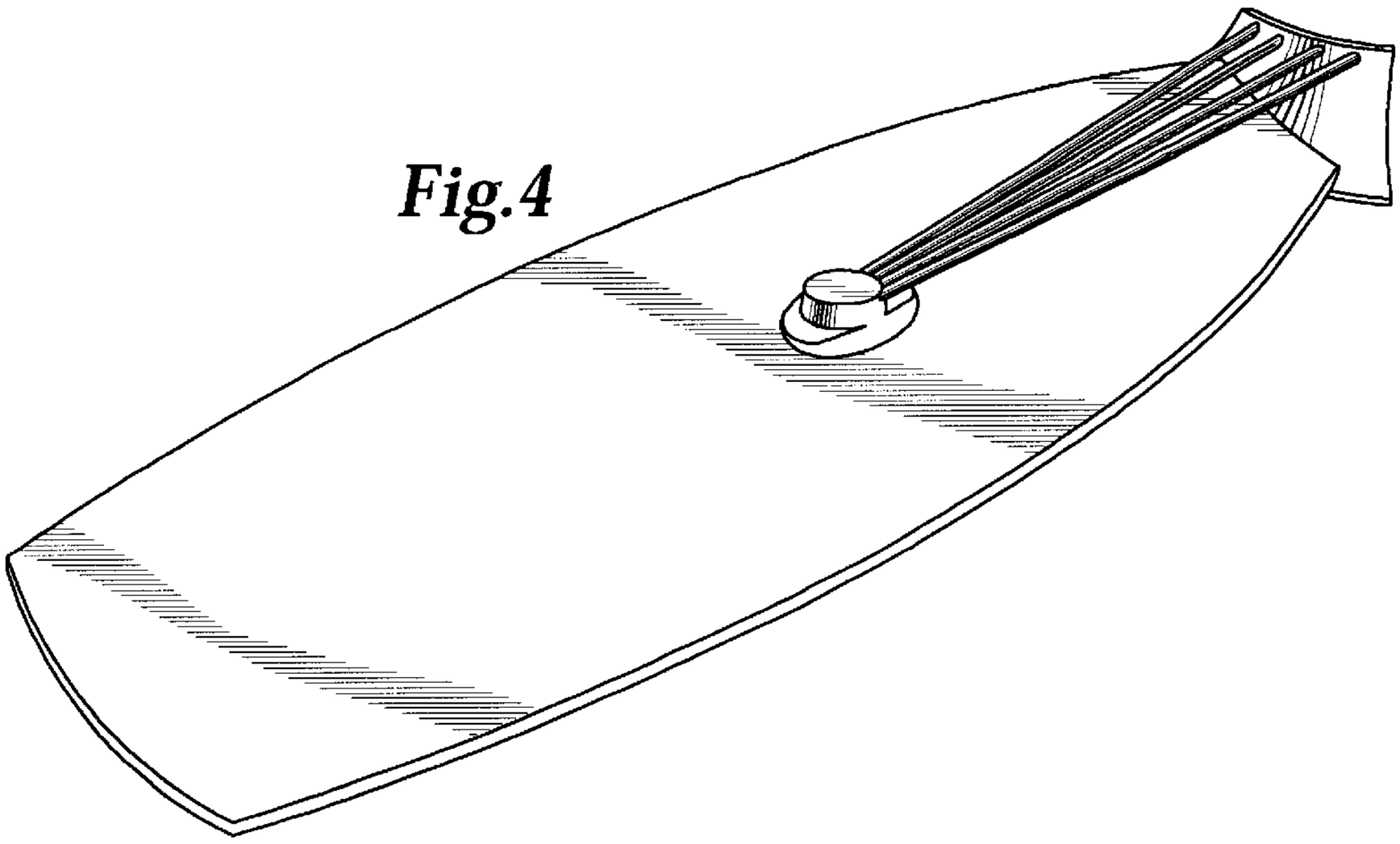

Fig.4

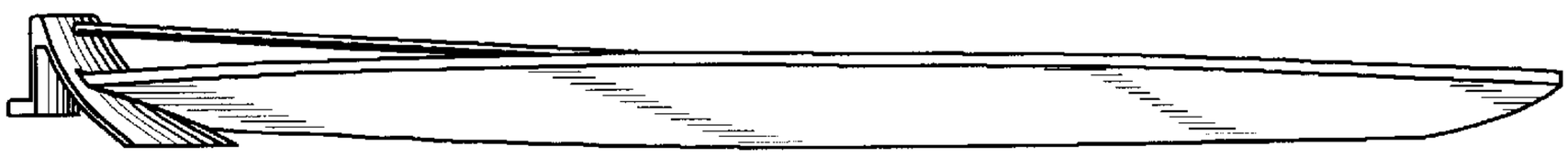

Fig.5

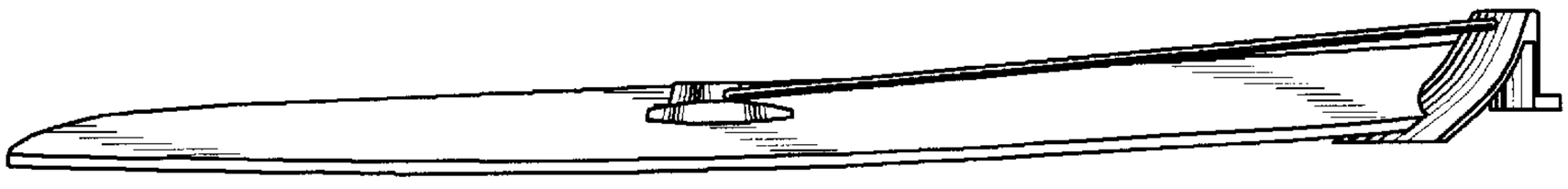

Fig.6

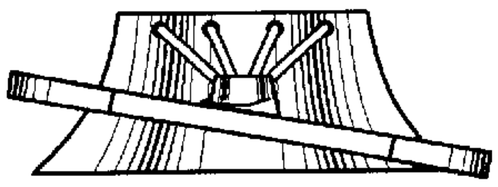

Fig.7

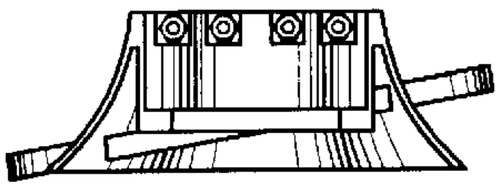

Fig.8