US00D479713S

(12) United States Design Patent

Sadatsuki

(10) Patent No.: US D479,713 S
(45) Date of Patent: ** Sep. 16, 2003

(54) **COMBINED DISC PLAYER AND RADIO RECEIVER**

(75) Inventor: **Koichi Sadatsuki**, Tokyo (JP)

(73) Assignee: **Sony Corporation**, Tokyo (JP)

(**) Term: **14 Years**

(21) Appl. No.: **29/164,421**

(22) Filed: **Jul. 25, 2002**

Related U.S. Application Data

(63) Continuation-in-part of application No. 29/134,867, filed on Jan. 3, 2001, now Pat. No. Des. 463,394.

(51) **LOC (7) Cl.** **14-01**

(52) **U.S. Cl.** **D14/168**; D14/156

(58) **Field of Search** D14/135–136, D14/156–157, 167–168, 188, 193–198, 257–258; 369/75.1, 75.2, 77.1, 77.2; 455/344, 347, 350–351

(56) **References Cited**

U.S. PATENT DOCUMENTS

D368,088	S		3/1996	Cha
5,848,042	A		12/1998	Takahashi et al.
D406,588	S		3/1999	Sogabe
D414,776	S		10/1999	Shintani et al.
6,028,737	A		2/2000	Khuu
D425,890	S		5/2000	Kataoka
D438,525	S	*	3/2001	Katayama D14/156
D444,136	S		6/2001	Sogabe

OTHER PUBLICATIONS

Catalog "99, WX–7700MDX," 2 sheet, SONY (Nov. 2001).
Web Page "Crutchfield," http://sm.crutchfield.com/cgi–bin/S–np27Jm3mCjm/ProdView.asp?s=45&g=300&id=morephotos&pi=2&I=158CDXM730&display=L, 1 sheet, SONY (May 2002).
Web Page "Sony CAR AUDIO," CDX–C470X,wysiwyg://12/http://www.sony.jp/products. . .contents/caraudio/lineup/cdx_c470x.html, 1 sheet, SONY (May 2002).

* cited by examiner

Primary Examiner—Nanda Bondade
(74) *Attorney, Agent, or Firm*—Rader, Fishman & Grauer PLLC

(57) **CLAIM**

The ornamental design for a combined disc player and radio receiver, as shown.

DESCRIPTION

FIG. **1** is a perspective view of a combined disc player and radio receiver showing my new design;
FIG. **2** is a front elevational view thereof;
FIG. **3** is a left side elevational view thereof;
FIG. **4** is a right side elevational view thereof; and,
FIG. **5** is a bottom plan view thereof.
The broken line showing on FIGS. **1–5** is for illustrative purposes only and forms no part of the claimed design.

1 Claim, 4 Drawing Sheets

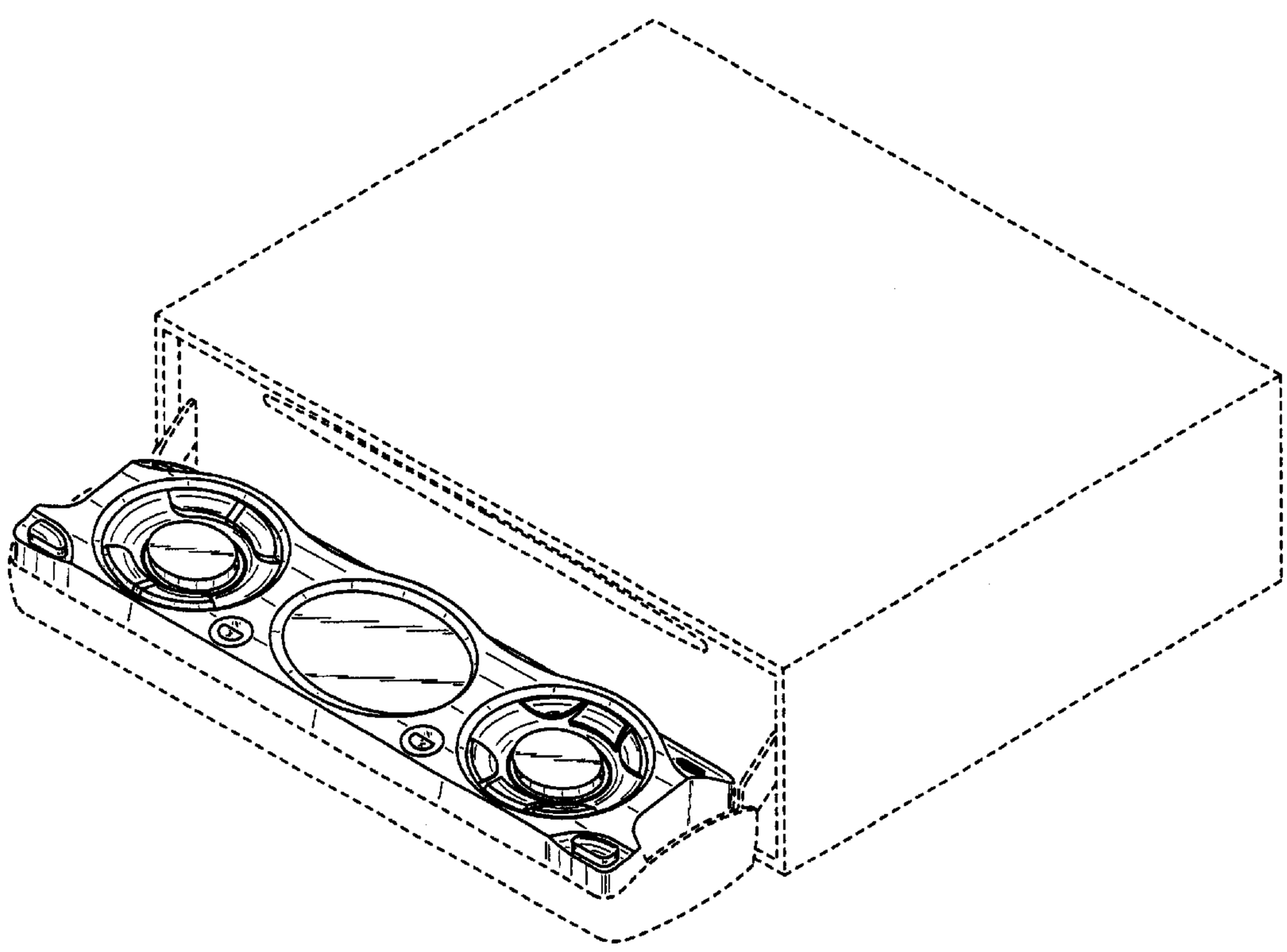

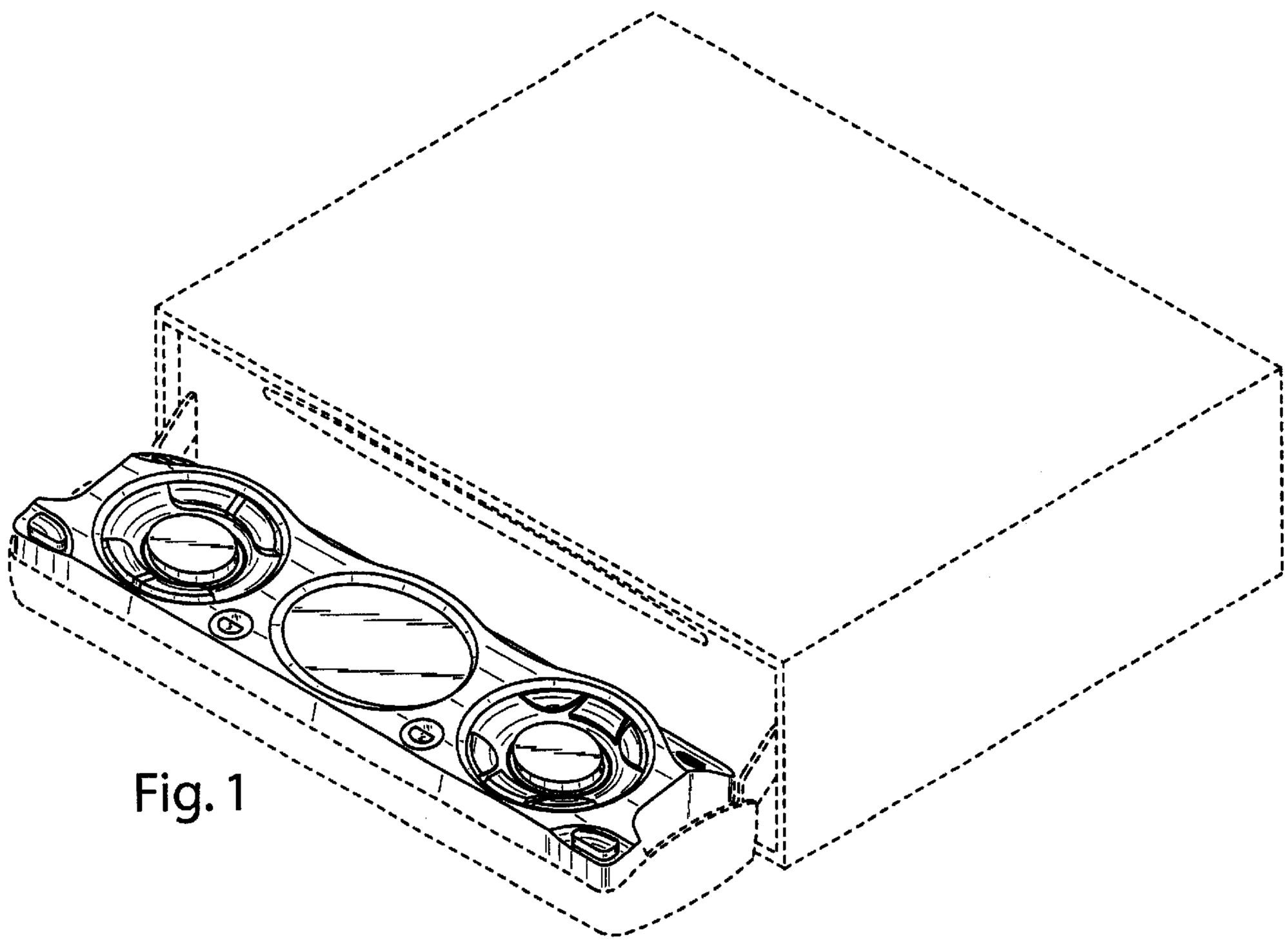

Fig. 1

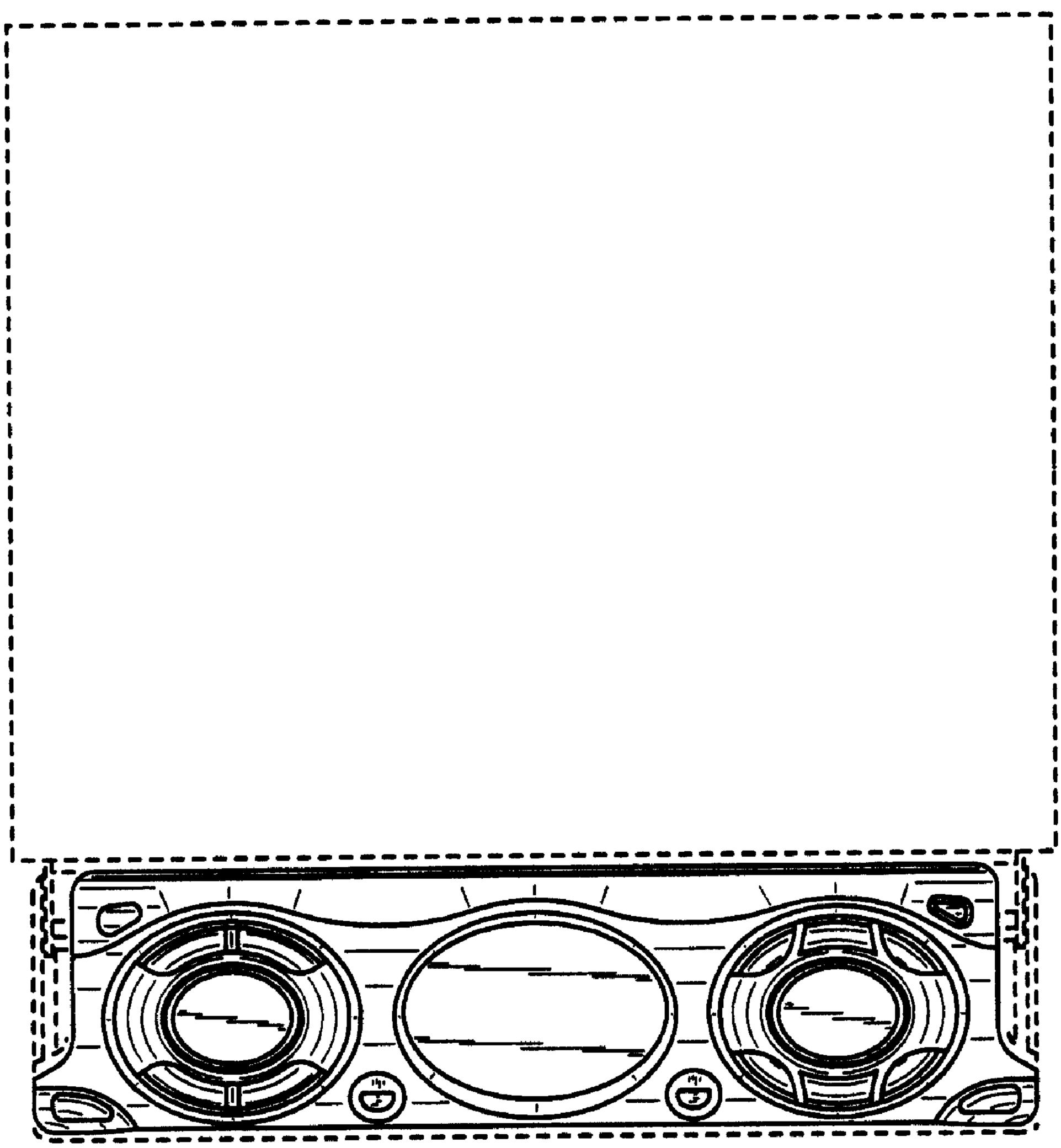

Fig. 2

Fig. 3

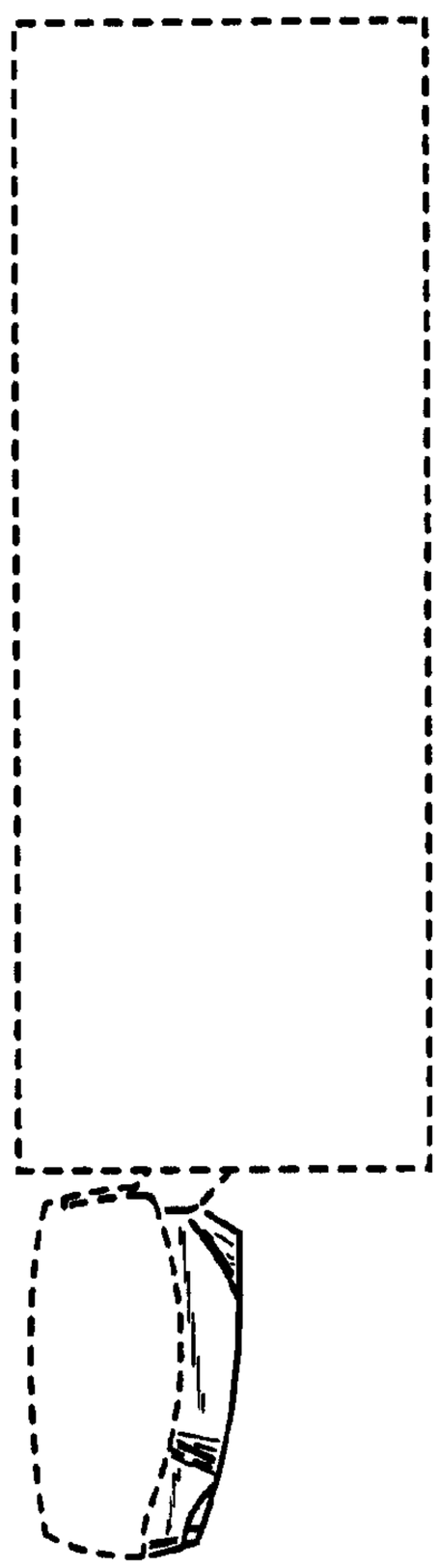

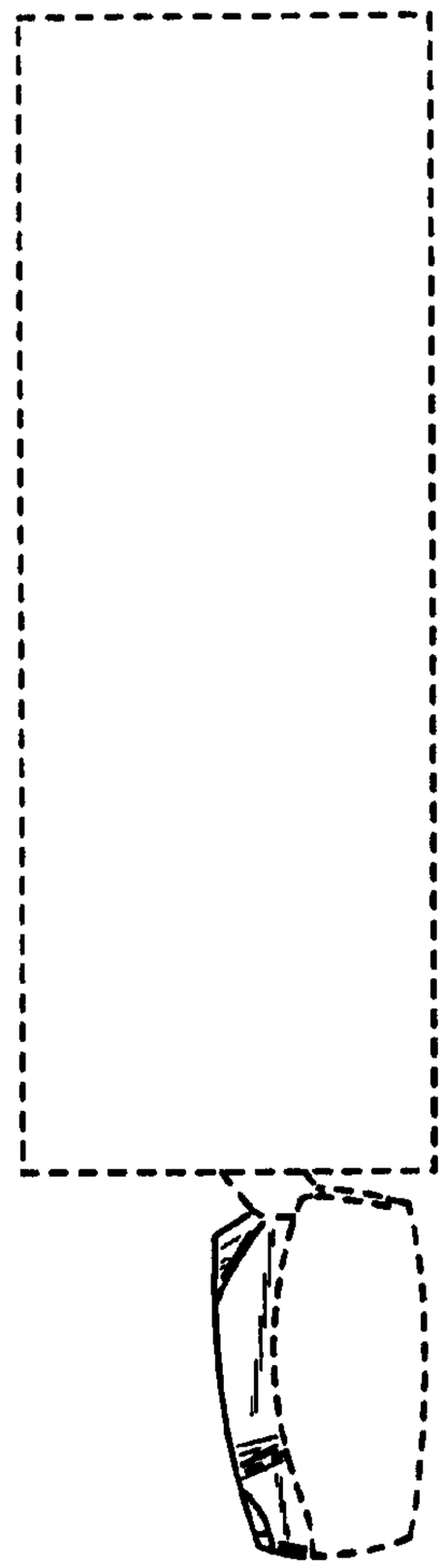

Fig. 4

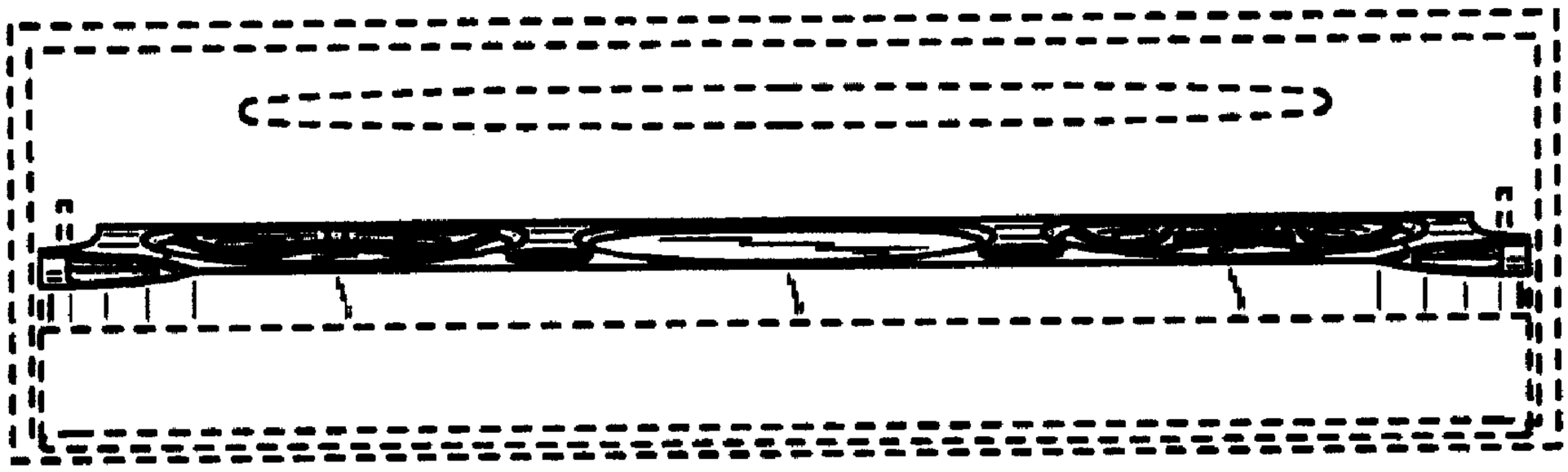

Fig. 5