US00D478676S

(12) United States Design Patent
France

(10) Patent No.: US D478,676 S
(45) Date of Patent: ** *Aug. 19, 2003

(54) **UPRIGHT GLAZING PANE SUPPORT WITH UNCONNECTED TOP FLANGES FOR WINDOW SASH**

(75) Inventor: **John S. France**, Cuyahoga Falls, OH (US)

(73) Assignee: **Sashlite, LLC**, Westport, CT (US)

(*) Notice: This patent is subject to a terminal disclaimer.

(**) Term: **14 Years**

(21) Appl. No.: **29/164,088**

(22) Filed: **Jul. 16, 2002**

(51) **LOC (7) Cl.** **25-01**
(52) **U.S. Cl.** **D25/121**
(58) **Field of Search** 52/204.62, 204.63, 52/204.68, 204.705, 204.5; D25/125, 119, 122, 121

(56) **References Cited**

U.S. PATENT DOCUMENTS

5,560,149 A	*	10/1996	Lafevre	52/204.62
5,887,392 A	*	3/1999	Martin	52/204.5
6,055,783 A		5/2000	Guhl et al.	
6,286,288 B1		9/2001	France	
6,401,428 B1		6/2002	Glover et al.	

FOREIGN PATENT DOCUMENTS

DE	1 915 245	10/1970
DE	2 041 038	2/1971
FR	2 518 158	6/1983
FR	2 708 030	1/1995
WO	98/25001	6/1998

* cited by examiner

Primary Examiner—Doris Clark
(74) *Attorney, Agent, or Firm*—Barry R. Lipsitz

(57) **CLAIM**

The ornamental design for an upright glazing pane support with unconnected top flanges for window sash, as shown and described.

DESCRIPTION

FIG. **1** is a front end elevational view showing the design, the rear end being a mirror image thereof, with broken lines depicting an example sash profile environment related to the design for illustrative purposes only and forming no part of the claimed design; and,

FIG. **2** is a front perspective view showing the design, with broken lines depicting an example sash profile environment related to the design for illustrative purposes only and forming no part of the claimed design, and is shown fragmented indicating indefinite length.

1 Claim, 1 Drawing Sheet

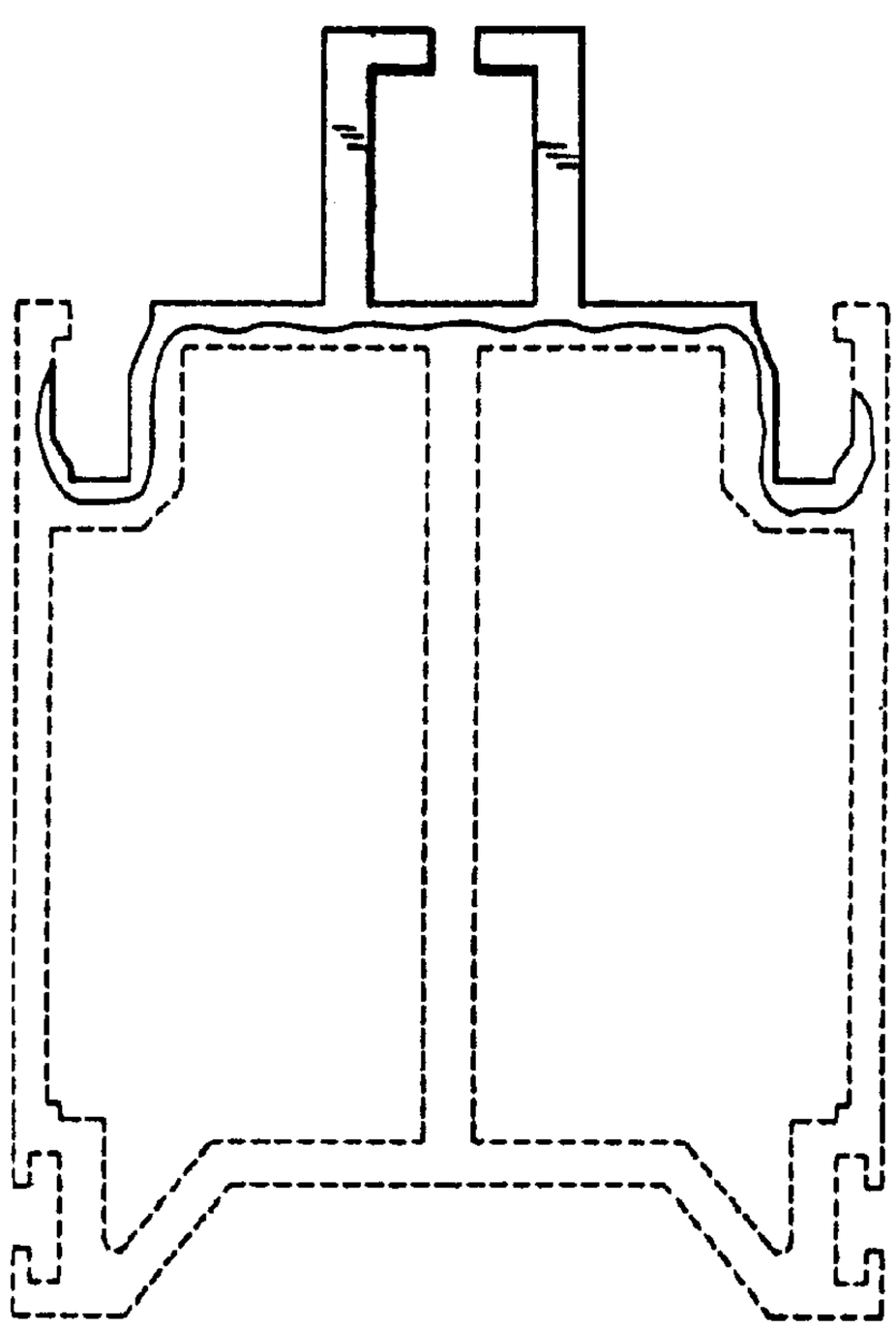

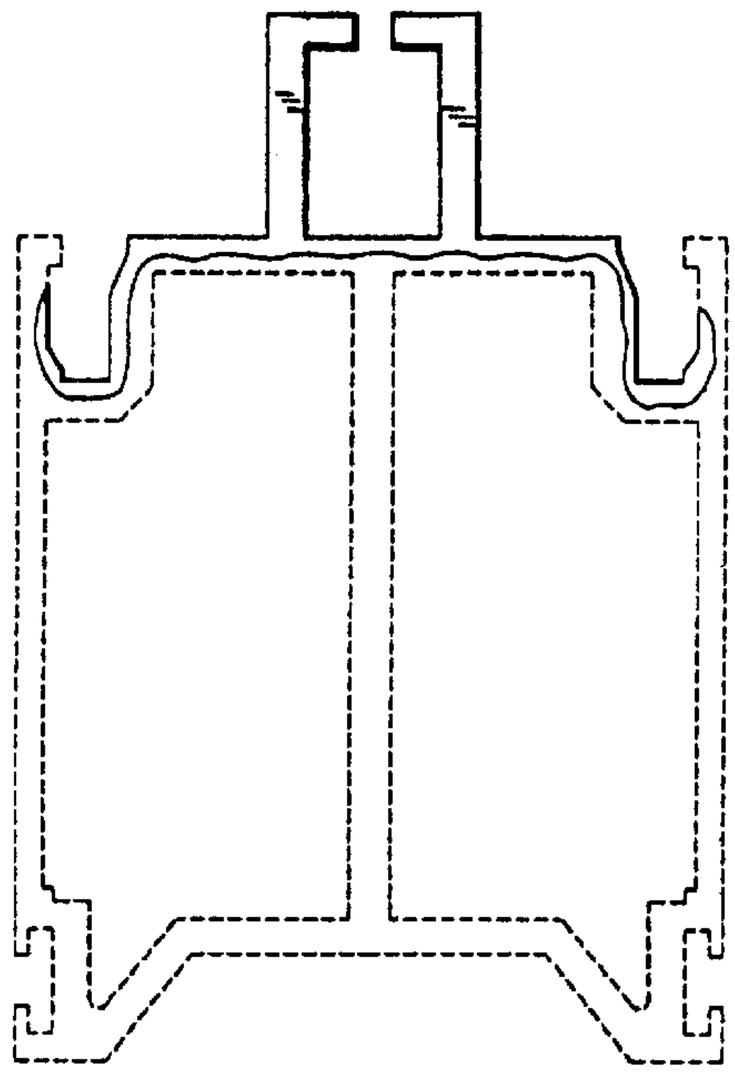

FIG. 1

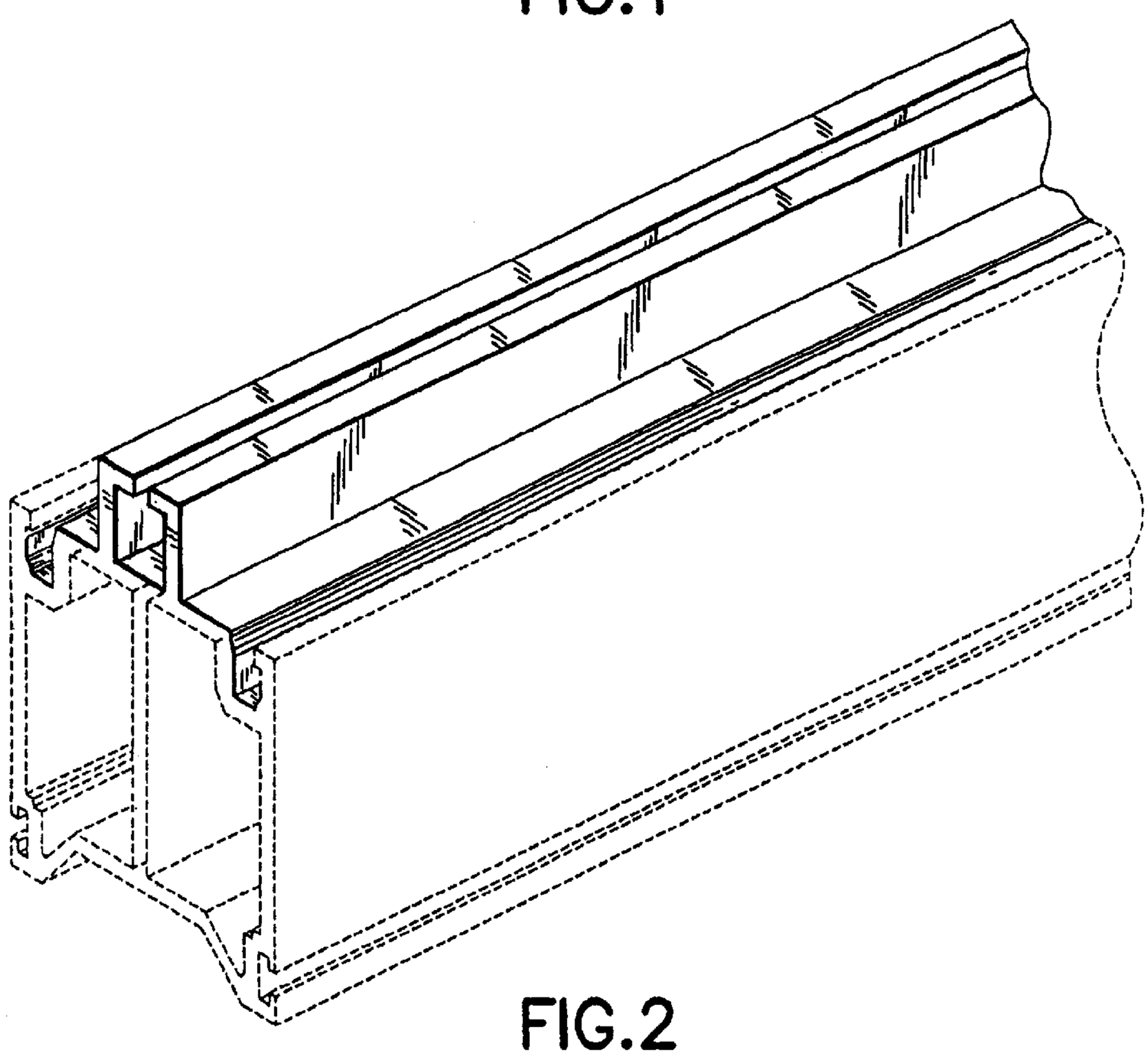

FIG. 2