US00D473403S

(12) United States Design Patent

Rockcastle

(10) Patent No.: US D473,403 S
(45) Date of Patent: ** Apr. 22, 2003

(54) **MOBILE STORAGE SYSTEM**

(76) Inventor: **Garth Carl Rockcastle**, 705 Kenwood Pkwy., Minneapolis, MN (US) 55403

(**) Term: **14 Years**

(21) Appl. No.: **29/165,540**

(22) Filed: **Aug. 12, 2002**

(51) **LOC (7) Cl.** **06-04**

(52) **U.S. Cl.** **D6/449**; D6/446; D6/448; D6/478

(58) **Field of Search** D6/432, 446, 448, D6/449, 470, 477, 478, 479; 211/189, 190, 49.1, 50, 59.2; 229/164, 185.1; 248/174; 312/107, 109–111, 114

(56) **References Cited**

U.S. PATENT DOCUMENTS

2,291,176	A	*	7/1942	Vanderveld	211/190
3,696,960	A	*	10/1972	Smirle	220/23.4
D276,964	S	*	1/1985	Boland, II	D6/470
D293,528	S	*	1/1988	Handler et al.	D6/449
RE33,913	E	*	5/1992	Kral et al.	211/59.2
D417,801	S	*	12/1999	Robert	D6/449
6,267,462	B1	*	7/2001	Krause et al.	312/111
D452,392	S	*	12/2001	Meder et al.	D6/432
6,385,505	B1	*	5/2002	Lipps	221/2

* cited by examiner

Primary Examiner—Cathron C. Brooks
(74) *Attorney, Agent, or Firm*—Peter Papp

(57) **CLAIM**

The ornamental design for a mobile storage system, as shown and described.

DESCRIPTION

FIG. **1** is a perspective view of a mobile storage system showing my new design;

FIG. **2** is a front elevational view thereof;

FIG. **3** is a back elevational view thereof;

FIG. **4** is a top plan view thereof;

FIG. **5** is a bottom plan view thereof;

FIG. **6** is a left side elevational view thereof;

FIG. **7** is a right side elevational view thereof;

FIG. **8** is an enlarged perspective view of the upper front left side corner thereof;

FIG. **9** is an enlarged perspective view of the upper rear right side corner thereof;

FIG. **10** is an enlarged perspective view of the lower rear right side corner thereof;

FIG. **11** is a perspective view of a second embodiment thereof, the only difference being the removal of a vertical member;

FIG. **12** is a perspective view of a third embodiment thereof, the only difference being the addition of a vertical member;

FIG. **13** is a perspective view of a fourth embodiment thereof, the only difference being the addition of two vertical members; and,

FIG. **14** is a perspective view of a fifth embodiment thereof, the only difference being the addition of doors.

The broken line showing of shelves in FIGS. **1, 2, 12, 13,** and **14** is for illustrative purposes only and forms no part of the claimed design.

1 Claim, 14 Drawing Sheets

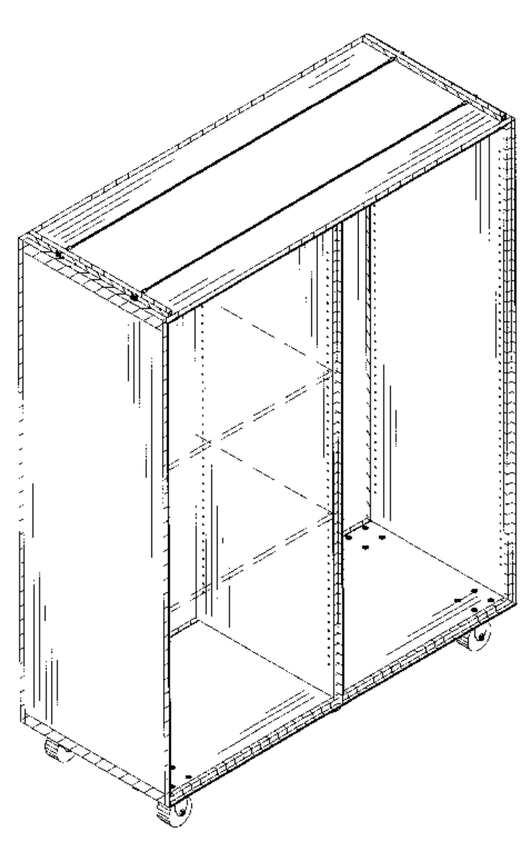

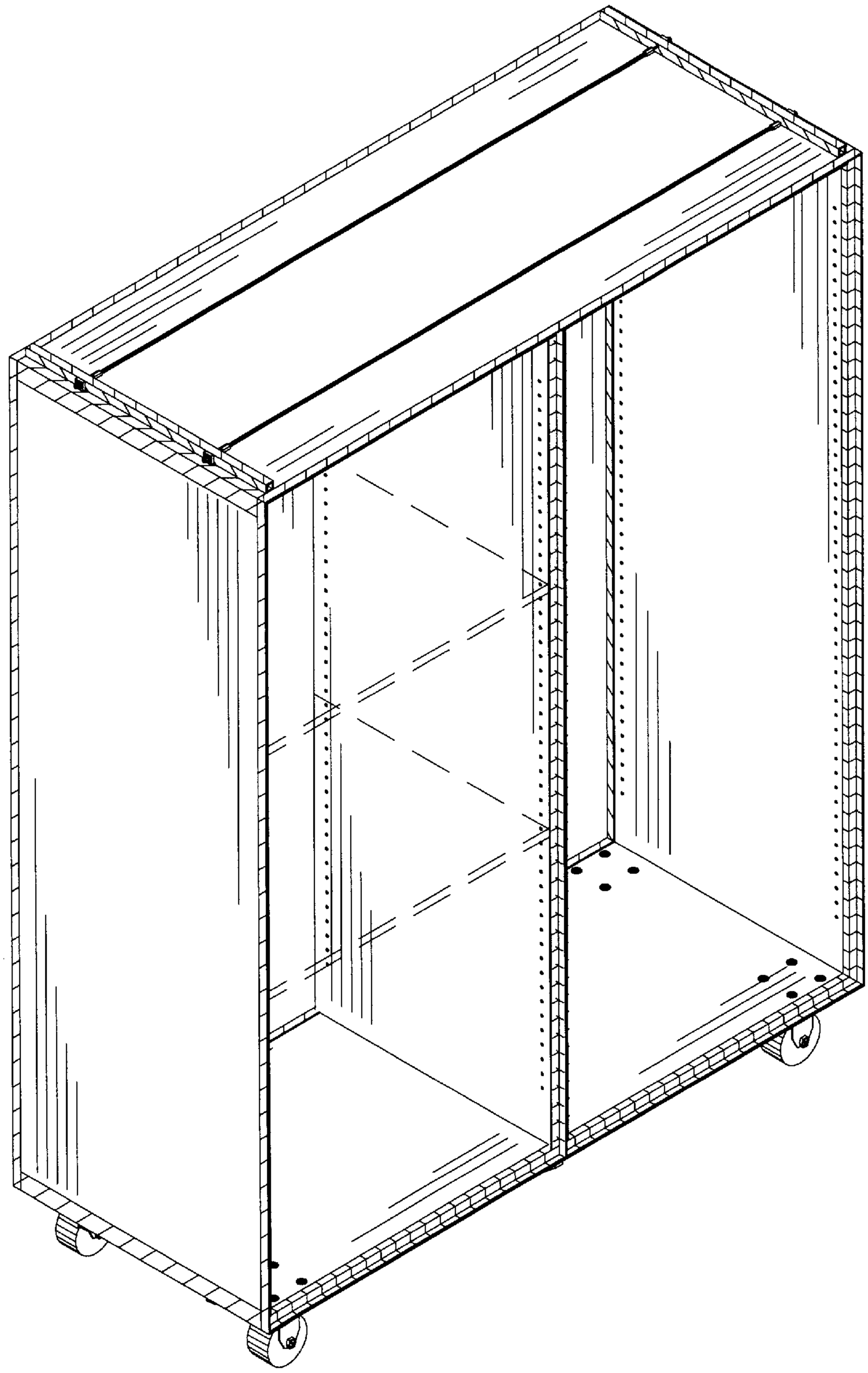

FIG. 1

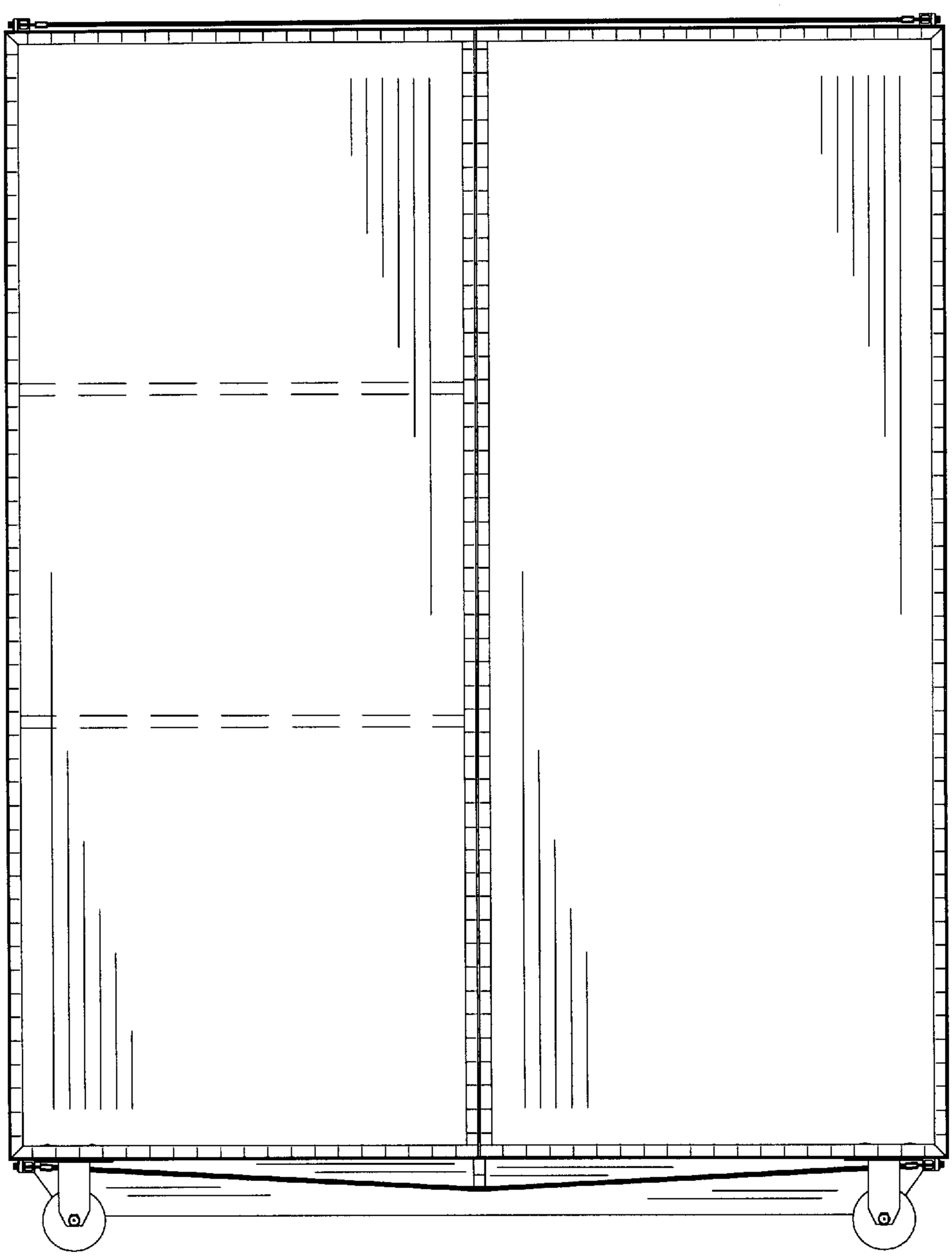

FIG. 2

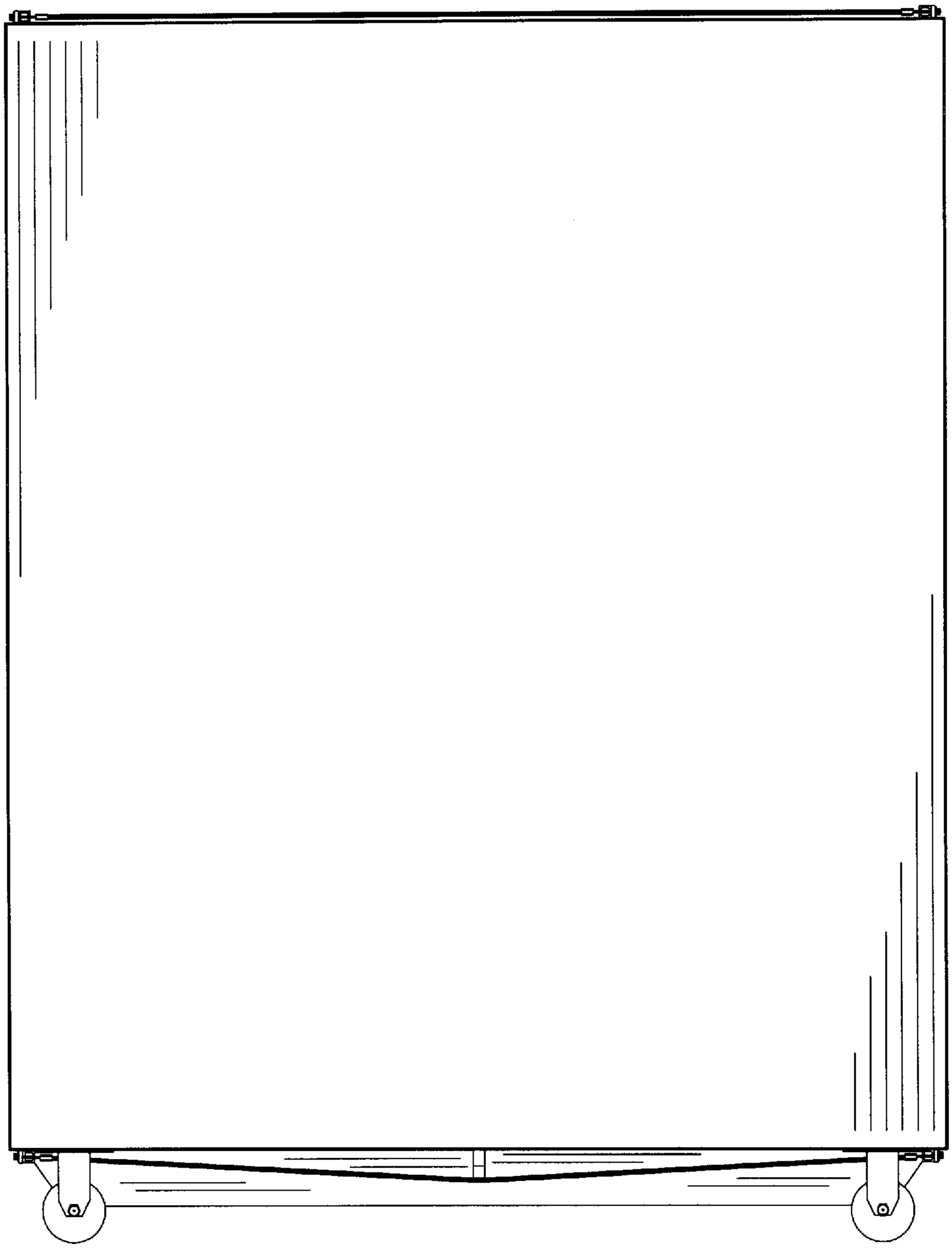

FIG. 3

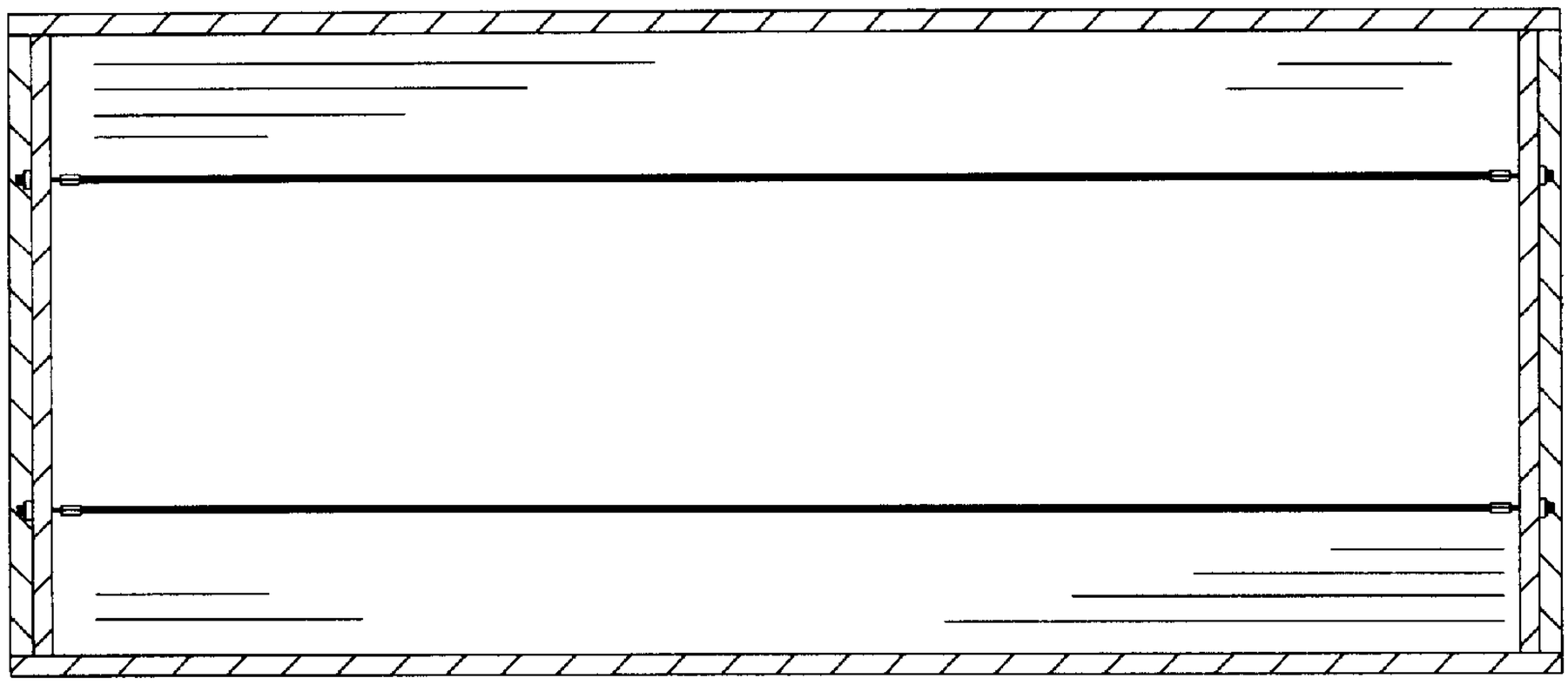

FIG. 4

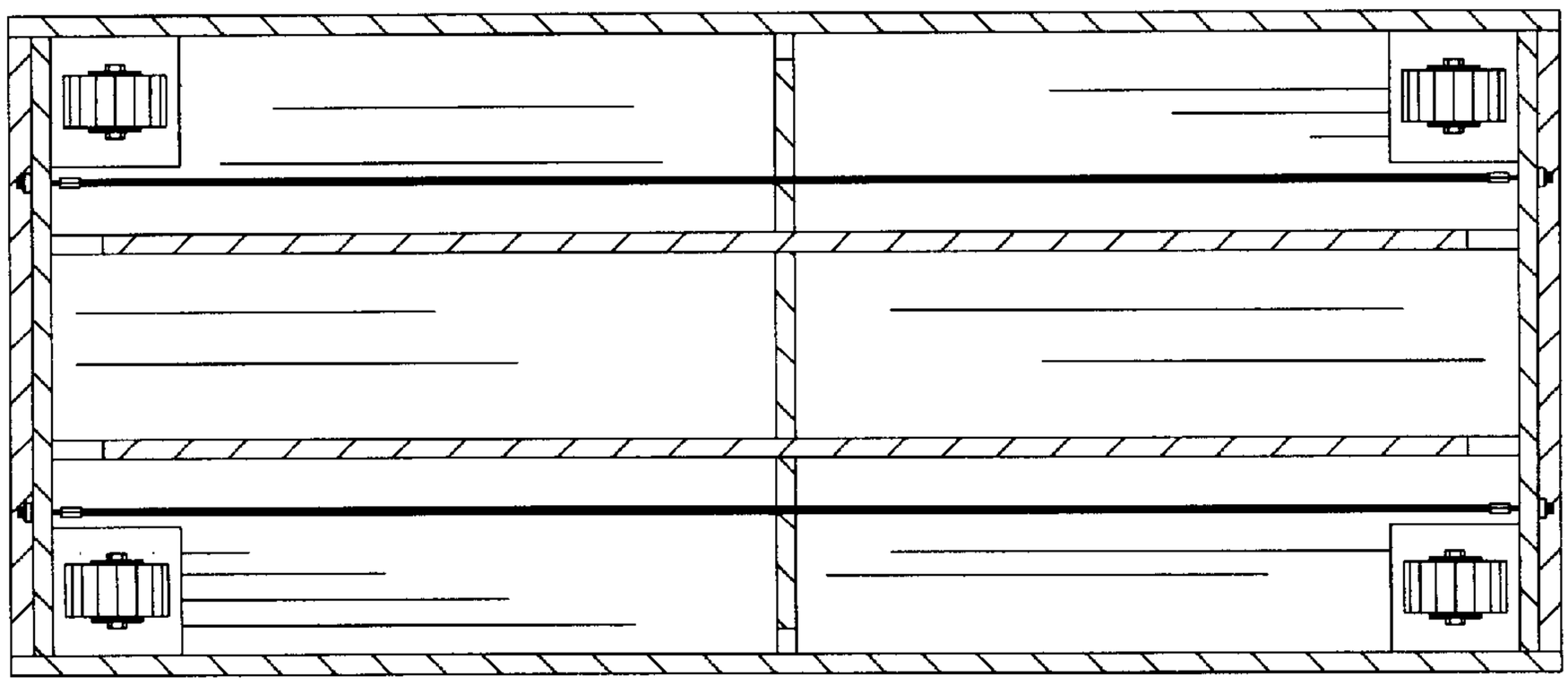

FIG. 5

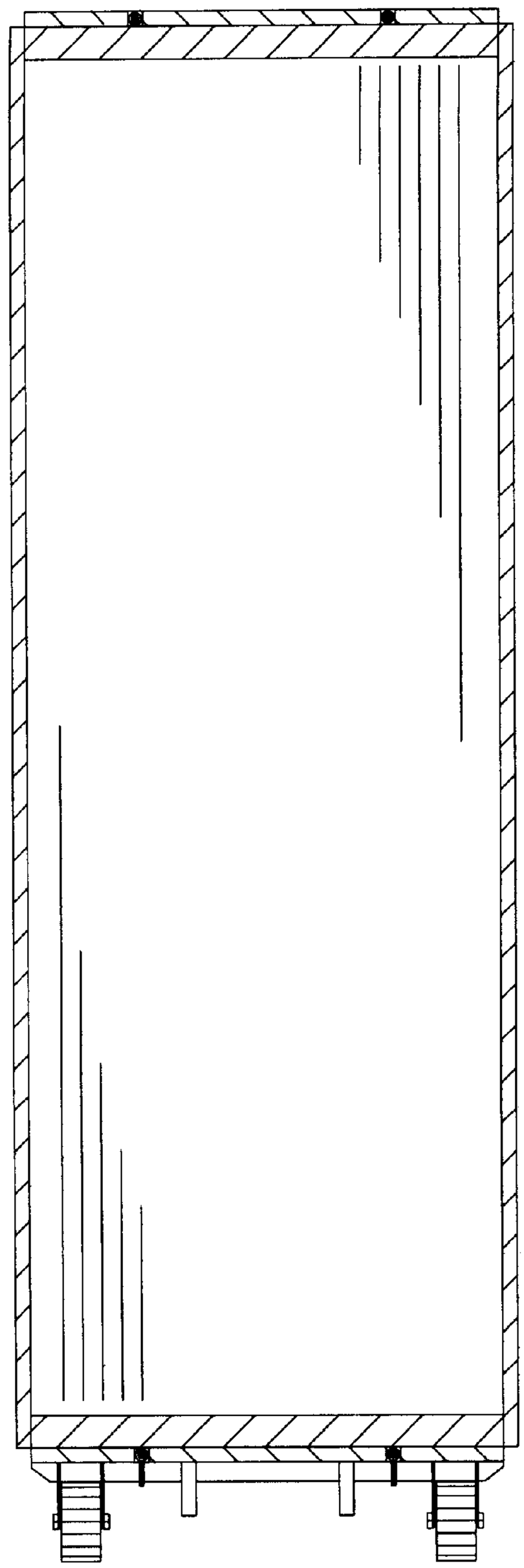

FIG. 6

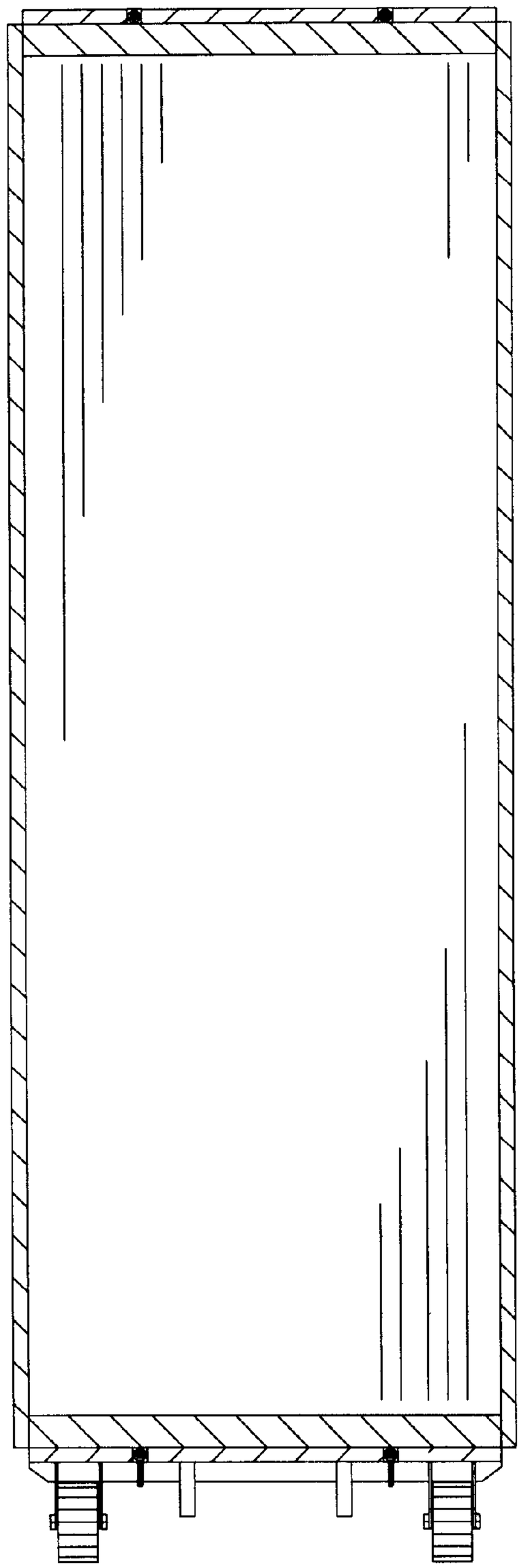

FIG. 7

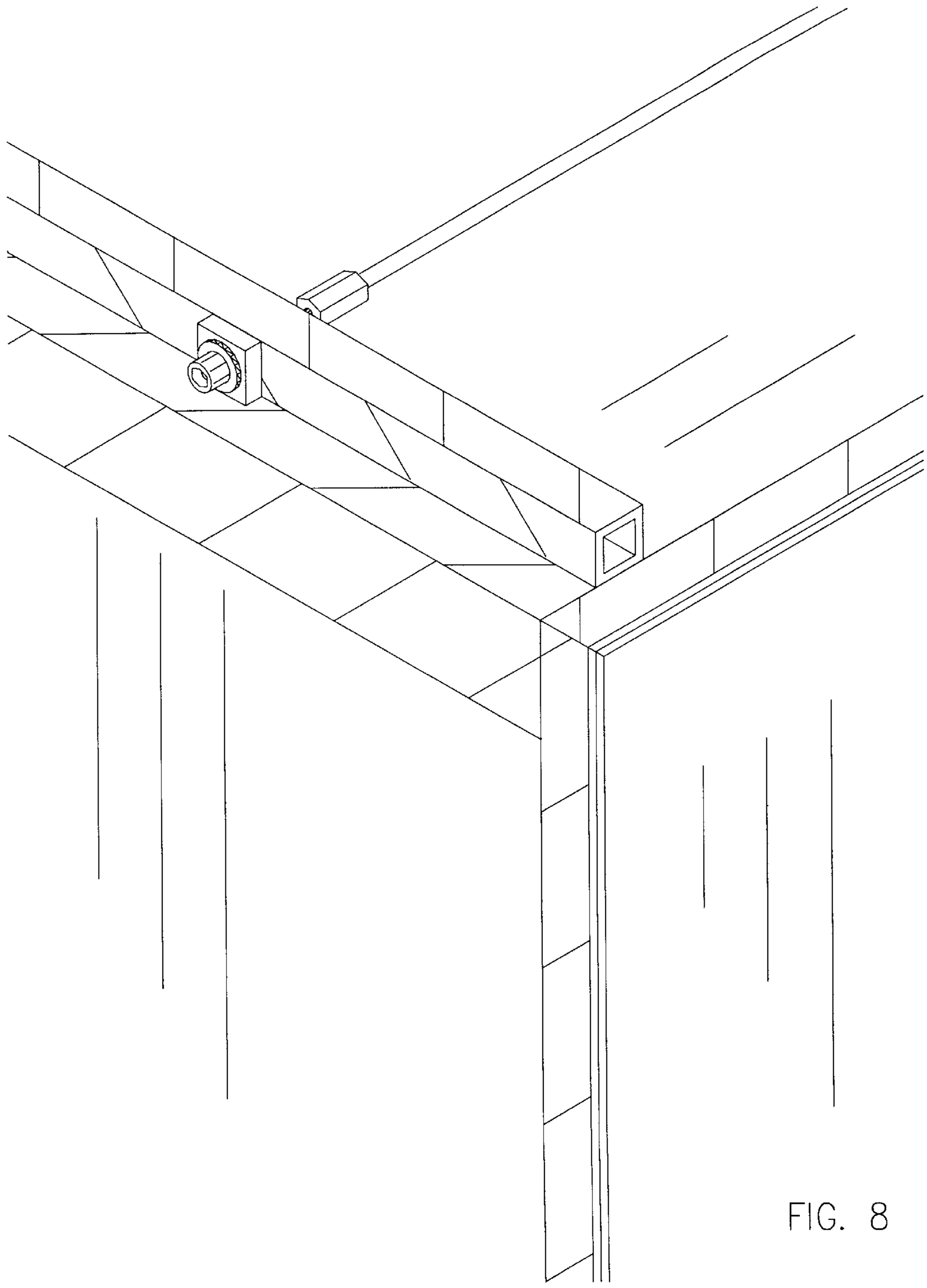

FIG. 8

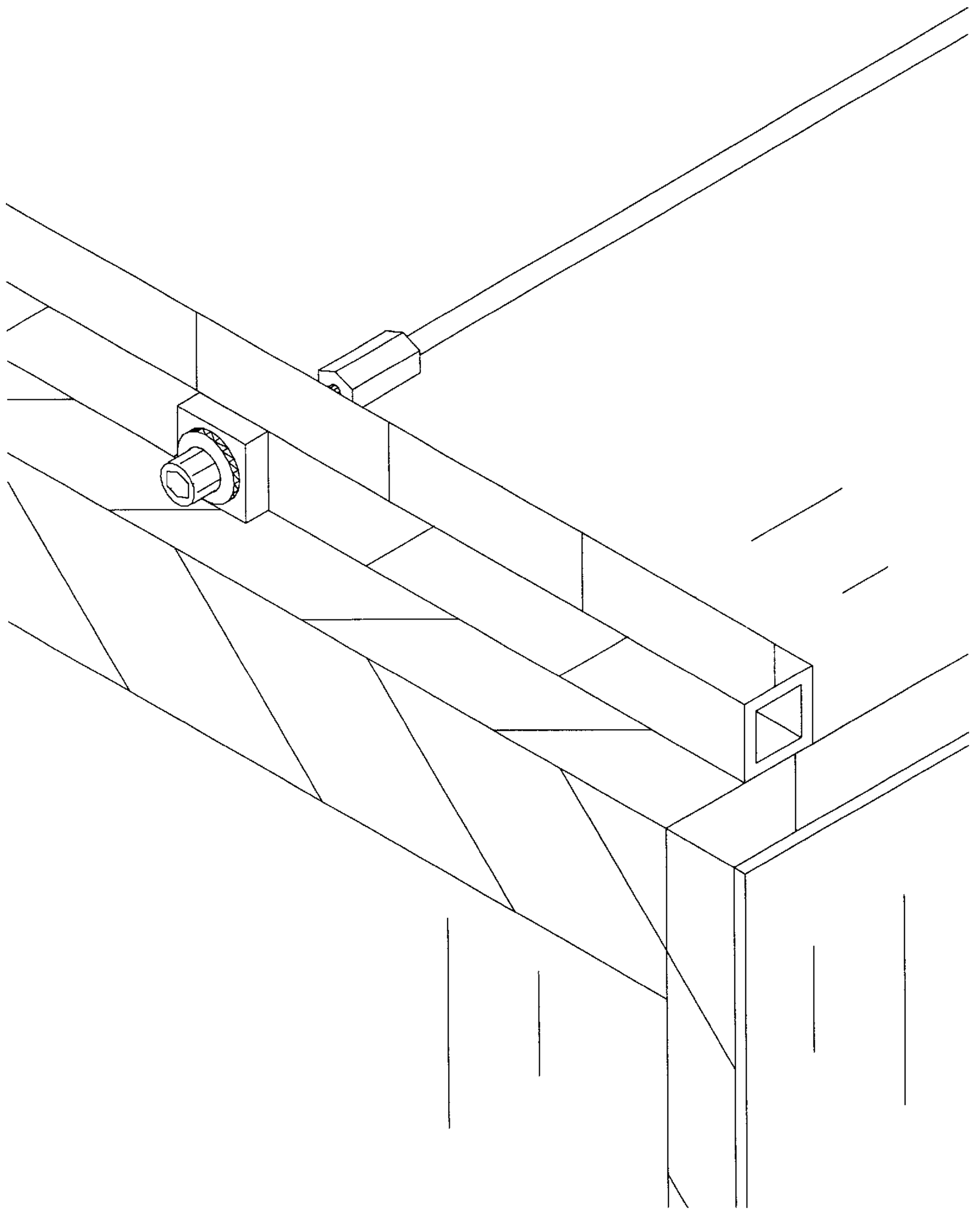

FIG. 9

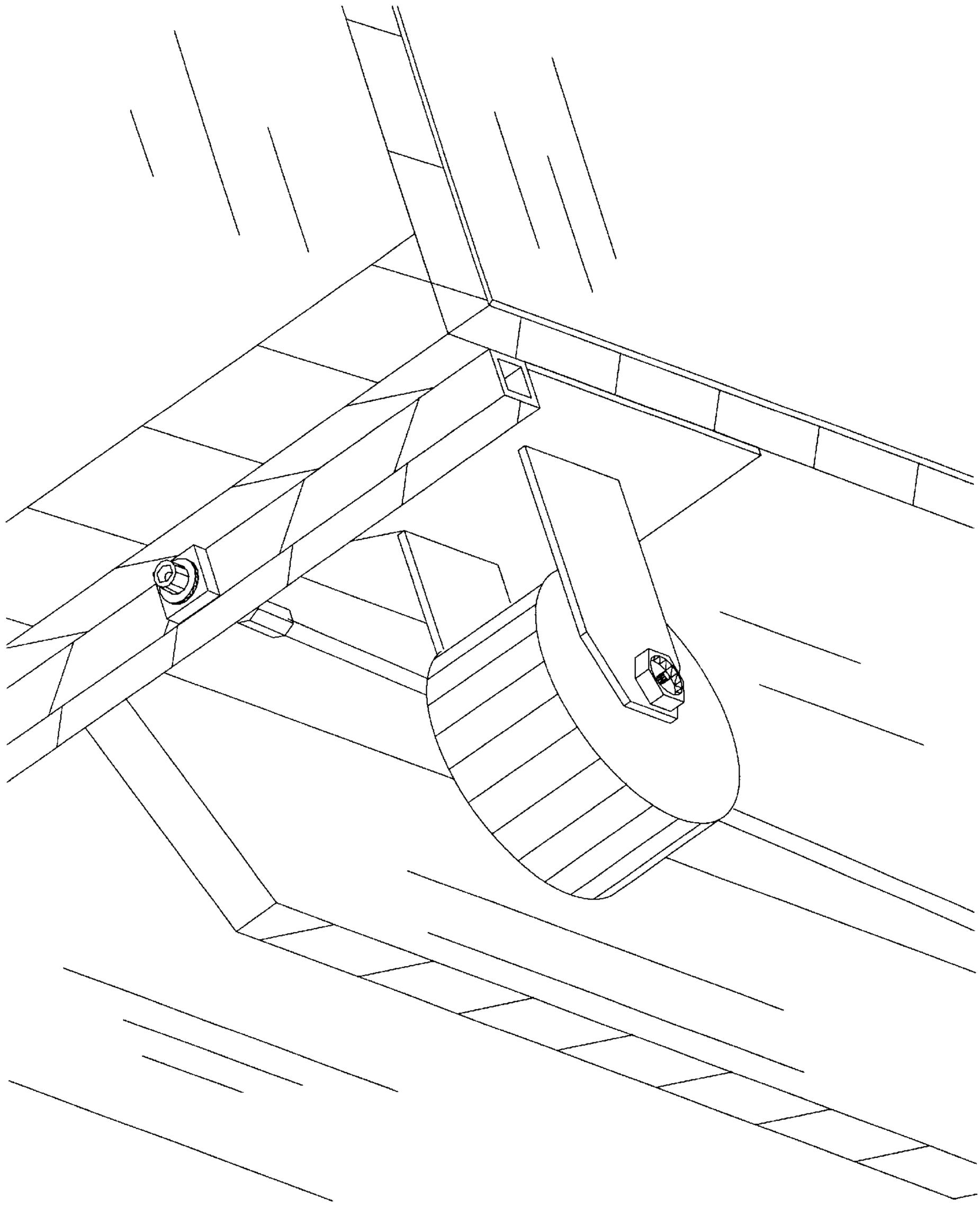

FIG. 10

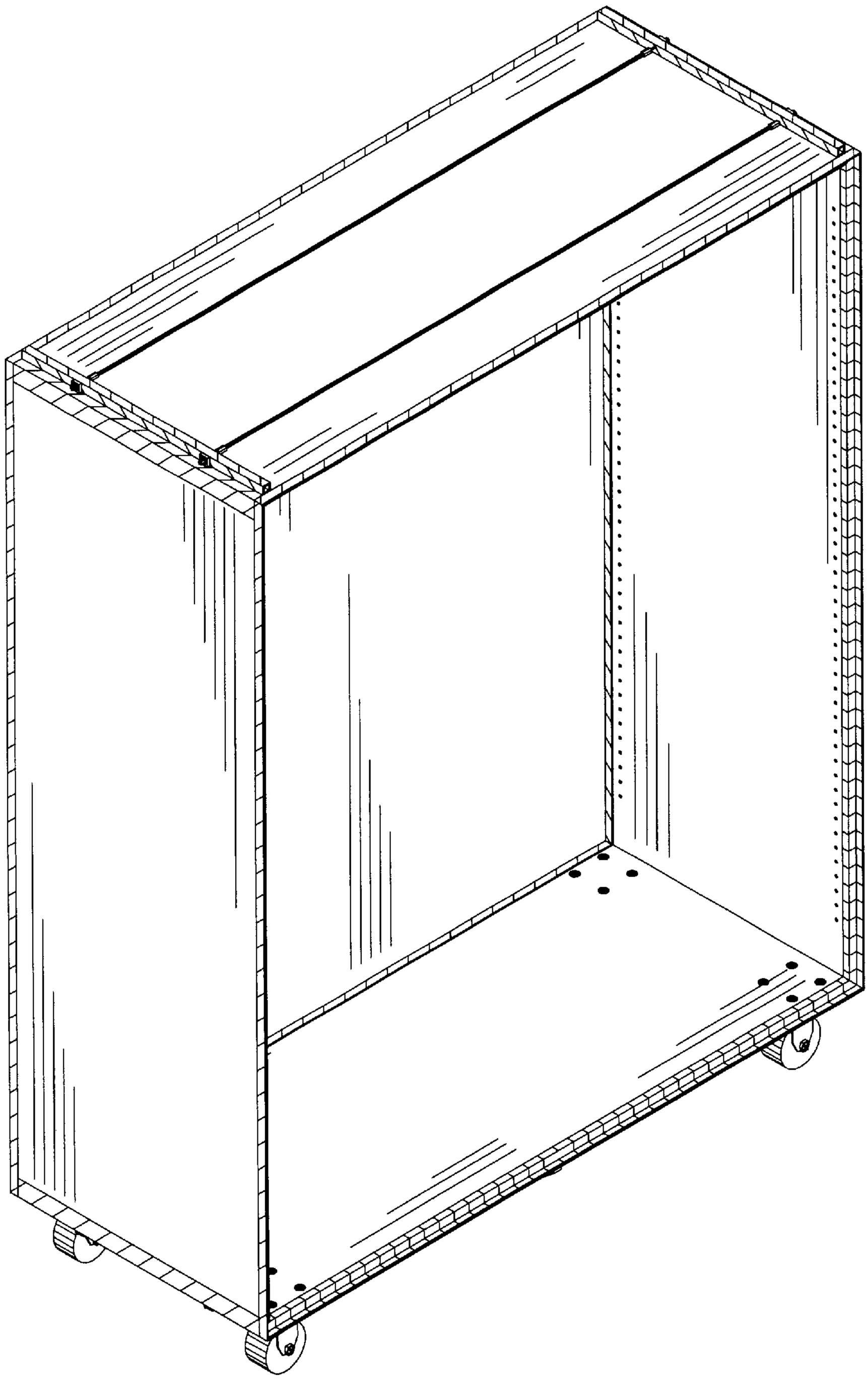

FIG. 11

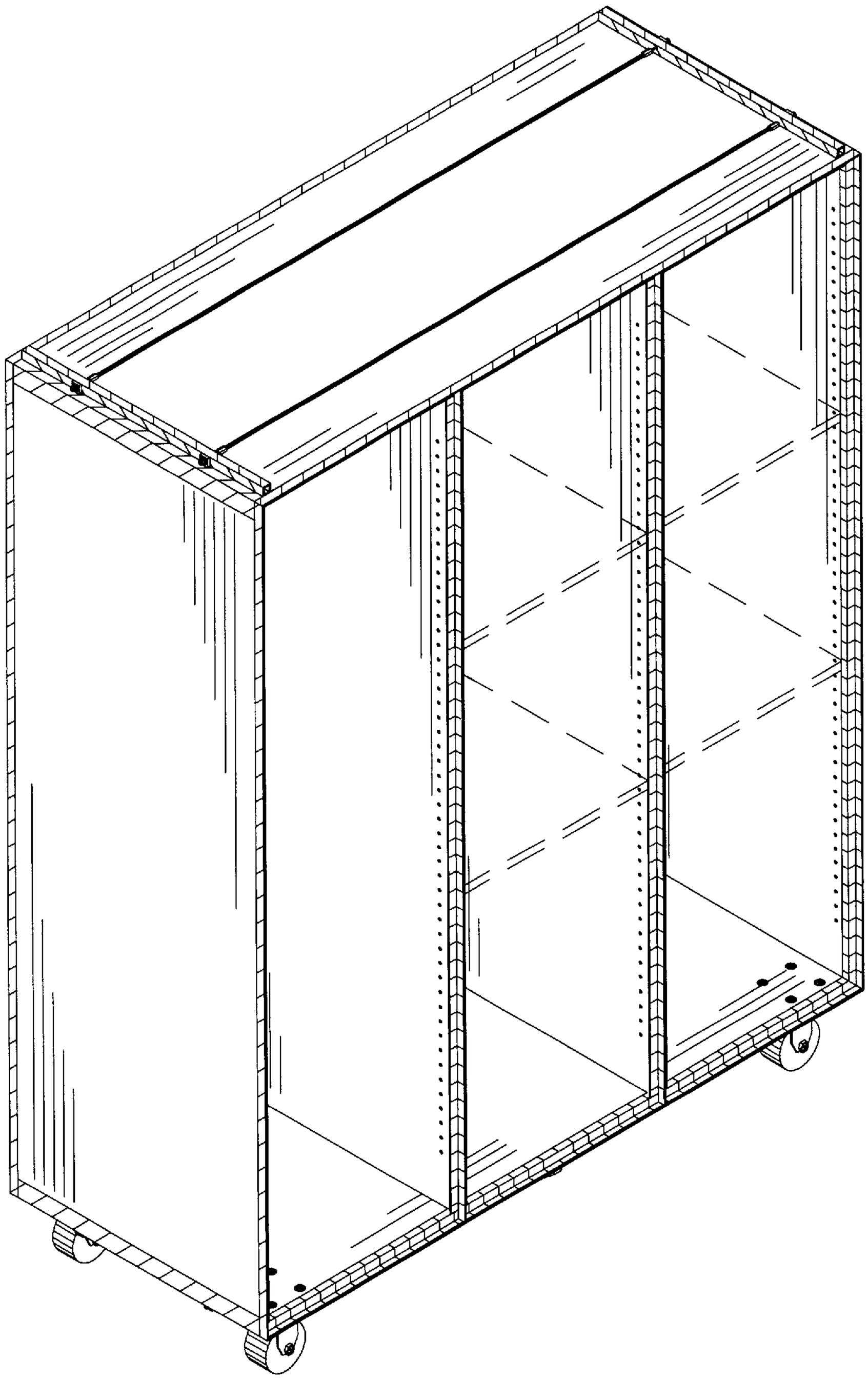

FIG. 12

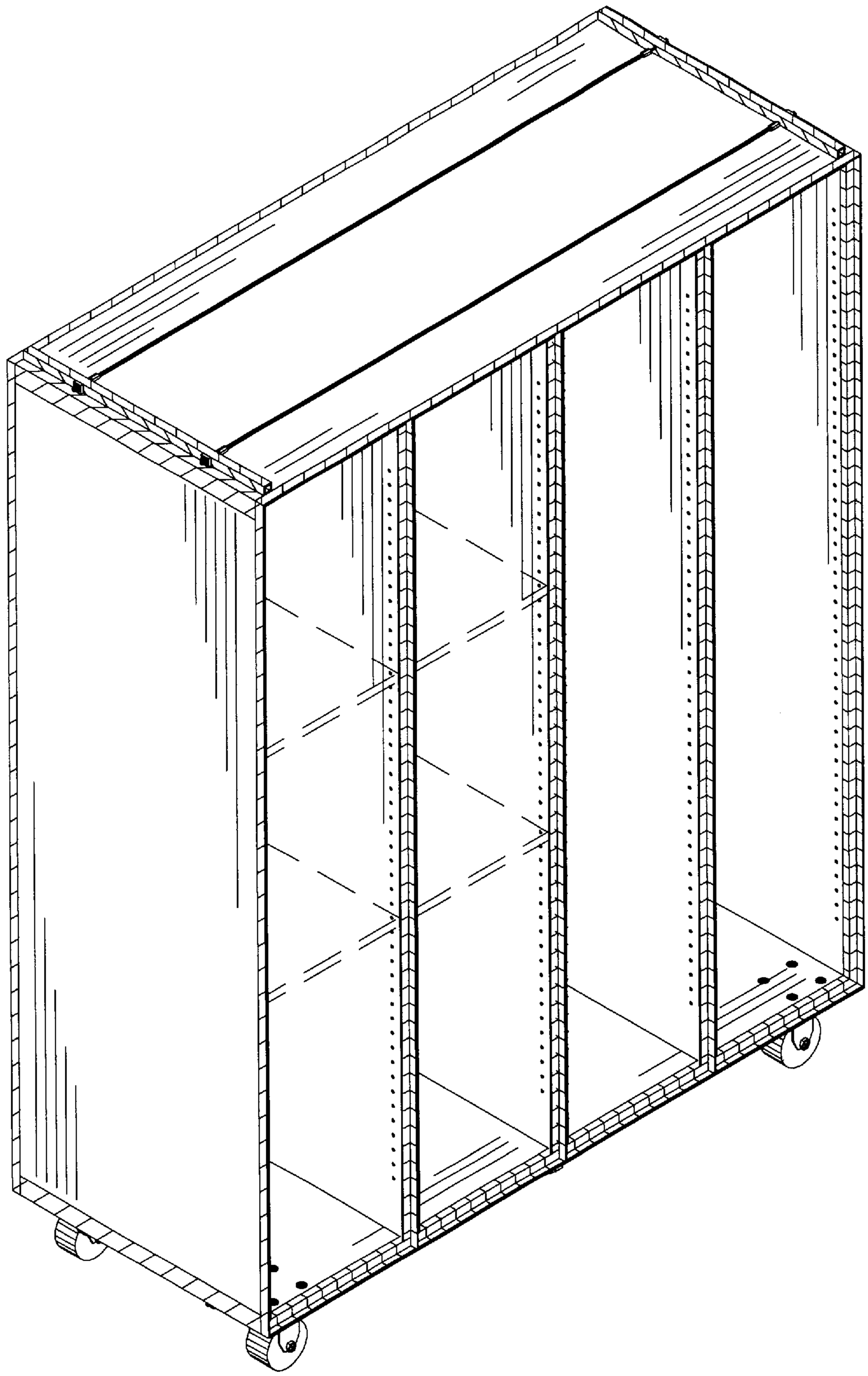

FIG. 13

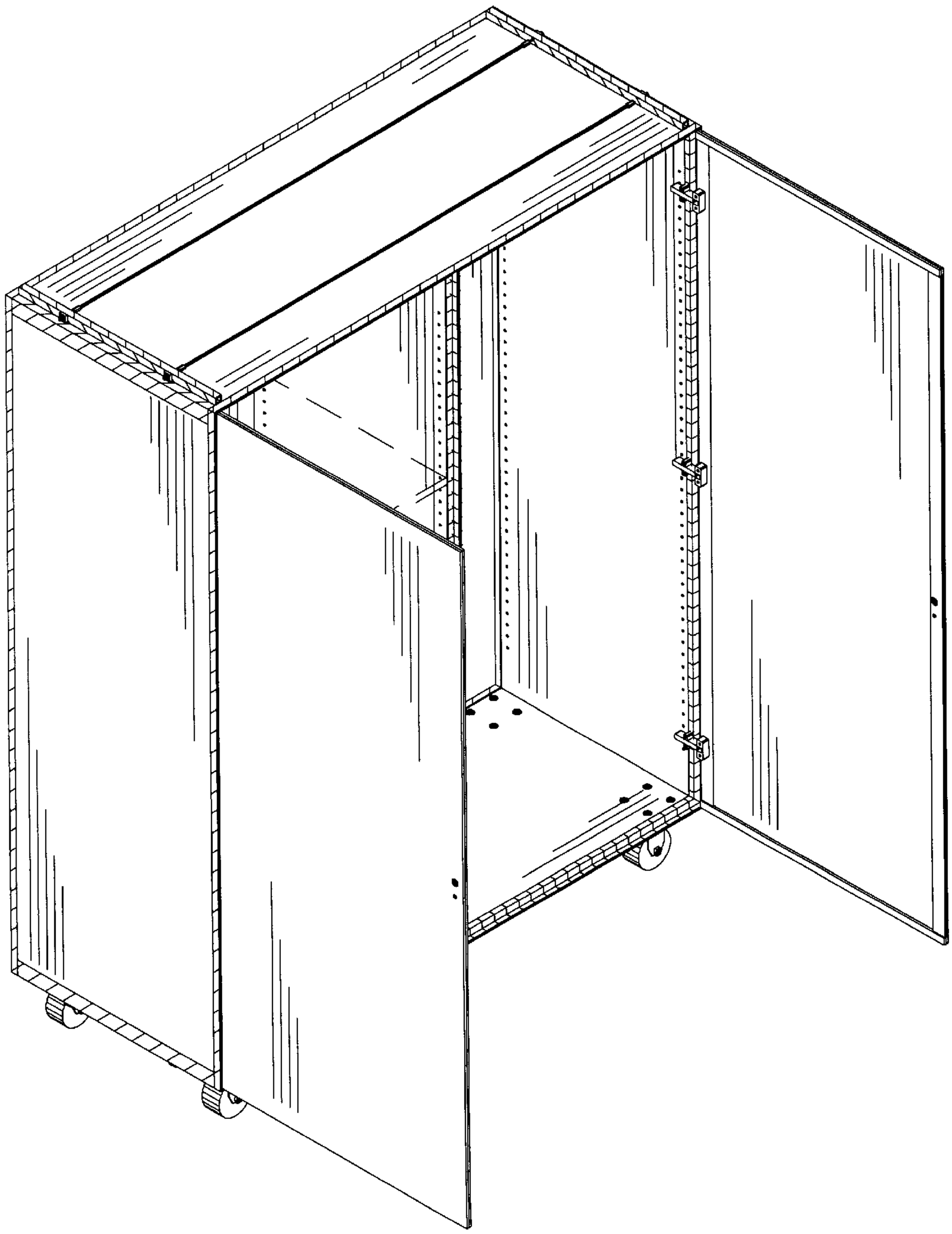

FIG. 14