US00D471829S

(12) United States Design Patent

Dennis et al.

(10) Patent No.: US D471,829 S
(45) Date of Patent: ** Mar. 18, 2003

(54) **DUAL INLET BASE PRESSURE INSTRUMENT**

(75) Inventors: **Steven M. Dennis**, Eden Prairie, MN (US); **William J. Ballot**, New Brighton, MN (US); **Steven M. Behm**, White Bear Lake, MN (US); **Mark Fandrey**, Eden Prairie, MN (US)

(73) Assignee: **Rosemount Inc.**, Eden Prairie, MN (US)

(*) Notice: This patent is subject to a terminal disclaimer.

(**) Term: **14 Years**

(21) Appl. No.: **29/149,555**

(22) Filed: **Oct. 11, 2001**

(51) **LOC (7) Cl.** **10-04**
(52) **U.S. Cl.** **D10/85**
(58) **Field of Search** D10/85; 73/700, 73/756

(56) **References Cited**

U.S. PATENT DOCUMENTS

4,617,607	A	10/1986	Park et al.	361/283
D287,827	S	1/1987	Broden	D10/46
D296,995	S	8/1988	Lee	D10/46

(List continued on next page.)

FOREIGN PATENT DOCUMENTS

EP 0 903 651 A1 3/1999

OTHER PUBLICATIONS

Product Data Sheet No: 00813–0100–4378, "Model 751 Field Signal Indicator", by Rosemount Inc., Eden Prairie, Minnesota, (1997).

(List continued on next page.)

Primary Examiner—Antoine Duval Davis
(74) *Attorney, Agent, or Firm*—Westman, Champlin & Kelly, P.A.

(57) **CLAIM**

The ornamental design for a dual inlet base pressure instrument, as shown and described.

DESCRIPTION

First Embodiment: FIGS. **1–7**;
FIG. **1** is a perspective view;
FIG. **2** is a top plan view;
FIG. **3** is a front elevational view;
FIG. **4** is a left side view;
FIG. **5** is a right side view;
FIG. **6** is a rear elevational view; and
FIG. **7** is a bottom plan view.
Second Embodiment: FIGS. **8–14**;
FIG. **8** is a perspective view;
FIG. **9** is a top view;
FIG. **10** is a front elevational view;
FIG. **11** is a left side view;
FIG. **12** is a right side view;
FIG. **13** is a rear elevational view; and
FIG. **14** is a bottom plan view.
Third Embodiment: FIGS. **15–21**;
FIG. **15** is a perspective view;
FIG. **16** is a top plan view;
FIG. **17** is a front elevational view;
FIG. **18** is a left side view;
FIG. **19** is a right side view;
FIG. **20** is a rear elevational view; and,
FIG. **21** is a bottom plan view.
The broken line showing is for illustrative purposes only and forms no part of the claimed design.

1 Claim, 21 Drawing Sheets

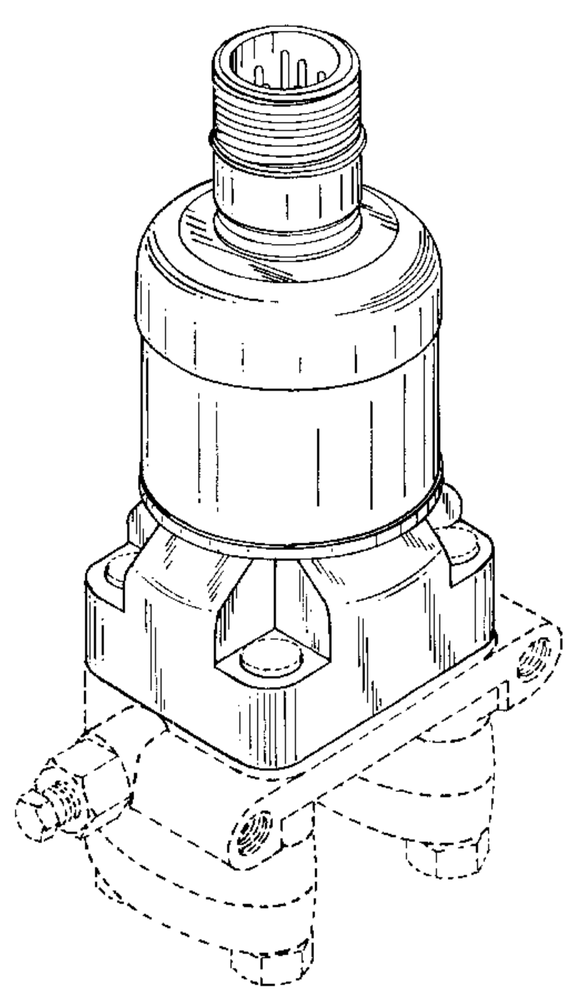

U.S. PATENT DOCUMENTS

D297,314	S	8/1988	Hedtke	D10/46
D297,315	S	8/1988	Pierce et al.	D10/85
D317,266	S	6/1991	Broden et al.	D10/46
D317,269	S	6/1991	Selg	D10/52
D318,432	S	7/1991	Broden et al.	D10/46
D329,619	S	9/1992	Cartwright	D10/52
D342,456	S	12/1993	Miller et al.	D10/60
5,369,386	A	11/1994	Alden et al.	335/206
D358,784	S	5/1995	Templin, Jr. et al.	D10/96
D366,000	S	1/1996	Karas et al.	D10/60
D366,218	S	1/1996	Price et al.	D10/52
5,656,782	A	8/1997	Powell, II et al.	73/756
5,823,228	A	10/1998	Chou	137/597
5,920,016	A	7/1999	Broden	73/756
5,988,203	A	11/1999	Hutton	137/597
6,038,927	A	3/2000	Karas	73/706
6,059,254	A	5/2000	Sundet et al.	248/678
D439,177	S	3/2001	Fandrey et al.	
D439,178	S	3/2001	Fandrey et al.	
D439,179	S	3/2001	Fandrey et al.	
D439,180	S	3/2001	Fandrey et al.	
D439,181	S	3/2001	Fandrey et al.	
D441,672	S	5/2001	Fandrey et al.	

OTHER PUBLICATIONS

Product Data Sheet No: 00813–0100–4731, "APEX™ Radar Gauge", by Rosemount Inc., Eden Prairie, Minnesota, (1998).

Product Data Sheet No: 00813–0100–4640, "Model 3201 Hydrostatic Interface Unit", from the Rosemount Comprehensive Product Catalog, published 1998, by Rosemount Inc., Eden Prairie, Minnesota.

Product Data Sheet No: 00813–0100–4003, "Model 8800A", by Rosemount Inc., Eden Prairie, Minnesota, (1998).

Product Data Sheet No: 00813–0100–4773, "Model 8742CΘMagnetic Flowmeter Transmitter with FOUNDATION™ Fieldbus", from the Rosemount Comprehensive Product Catalog, published 1998, by Rosemount Inc., Eden Prairie, Minnesota.

Rosemount Model 8732C Magnetic Flowmeter Transmitter, by Rosemount Inc., Eden Prairie, Minnesota, (1998).

Product Data Sheet No: 00813–0100–4263, "Model 444 Alphaline® Temperature Transmitters", by Rosemount Inc., Eden Prairie, Minnesota, (1997).

Product Data Sheet No: 00813–0100–4769, "Model 3244MV Multivariable Temperature Transmitter with FOUNDATION™ Fieldbus", by Rosemount Inc., Eden Prairie, Minnesota, (1998).

Product Data Sheet No: 00813–0100–4724, "Models 3144 and 3244MV Smart Temperature Transmitters", by Rosemount Inc., Eden Prairie, Minnesota, (1998).

Product Data Sheet No: 00813–0100–4738, "Model 3095FB Multivariable™ Transmitter with Modbus™ Protocol", by Rosemount Inc., Eden Prairie, Minnesota, (1996, 1997).

U.S. design patent application Ser. No. 29/149,556, Dennis et al., filed on Oct. 11, 2002.

Product Data Sheet No: 00813–0100–4001, "Model 3051 Digital Pressure Transmitter for Pressure, Flow, and Level Measurement", by Rosemount Inc., Eden Prairie, Minnesota, (1998).

Product Data Sheet No: 00813–0100–4698, "Model 2090F Sanitary Pressure Transmitter", by Rosemount Inc., Eden Prairie, Minnesota, (1998).

Product Data Sheet No: 00813–0100–4690, "Model 2088 Economical Smart Pressure Transmitter", by Rosemount Inc., Eden Prairie, Minnesota, (1998).

Product Data Sheet No: 00813–0100–4360, "Model 1151 Alphaline® Pressure Transmitters", by Rosemount Inc., Eden Prairie, Minnesota, (1998).

Product Data Sheet No: 00813–0100–4458, "Model 1135F Pressure–to–Current Converter", by Rosemount Inc., Eden Prairie, Minnesota, (1983, 1986, 1994).

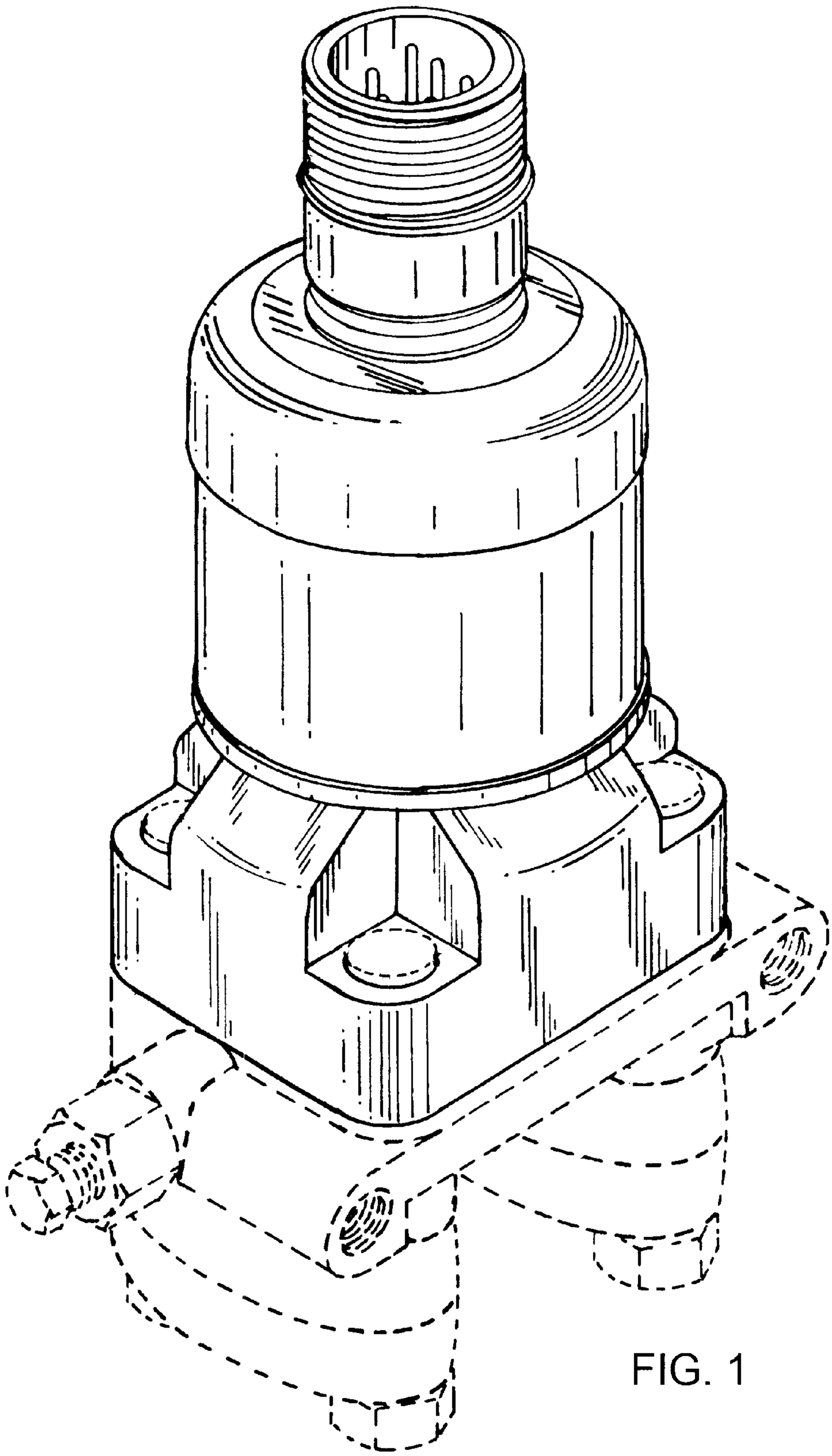

FIG. 1

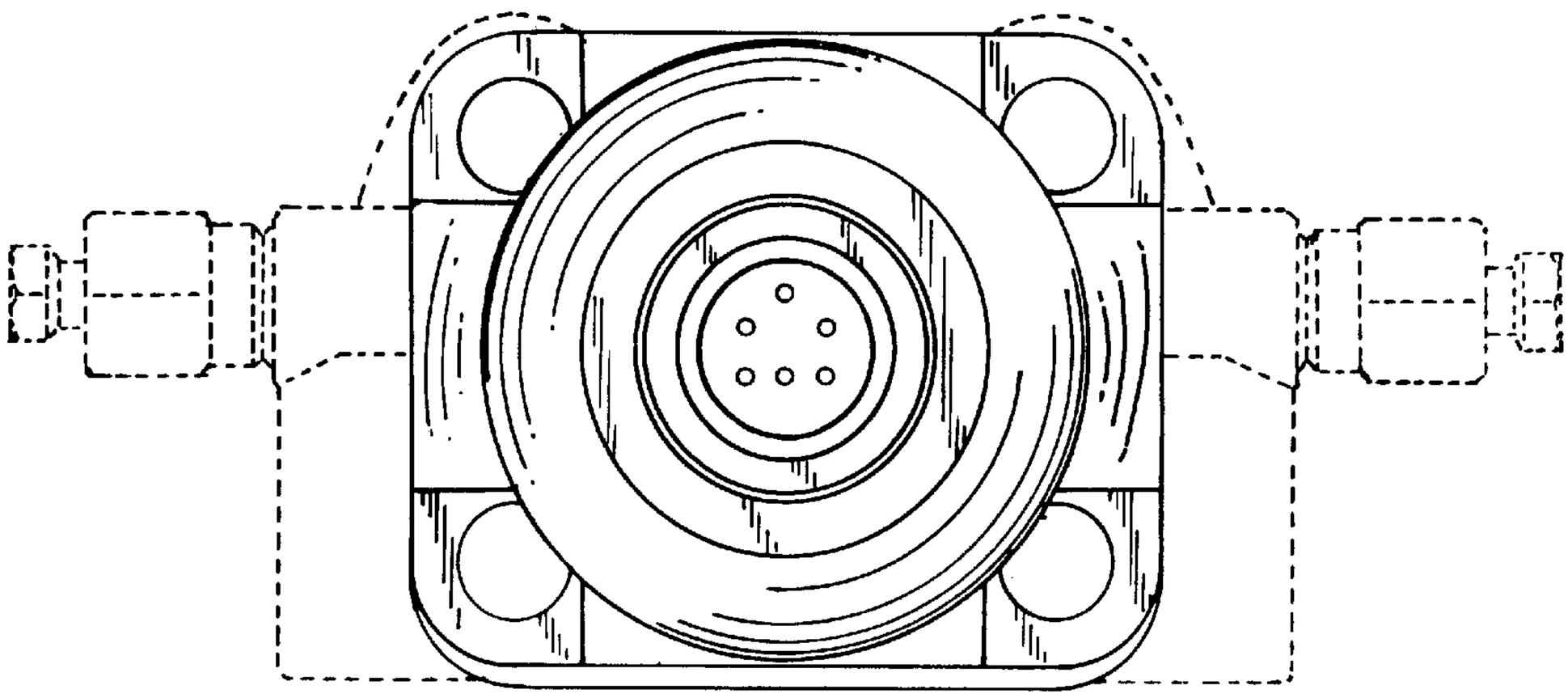

FIG. 2

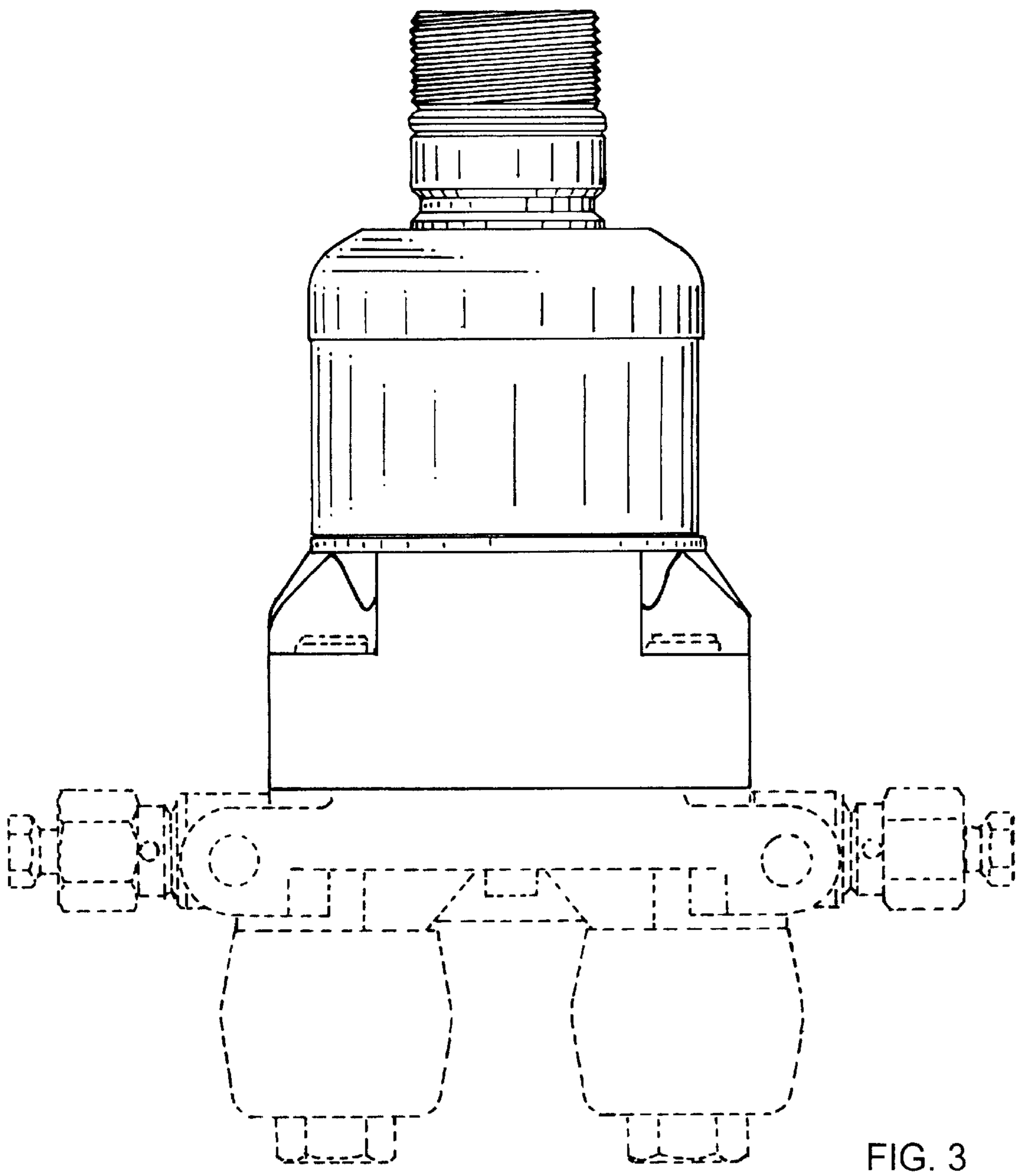

FIG. 3

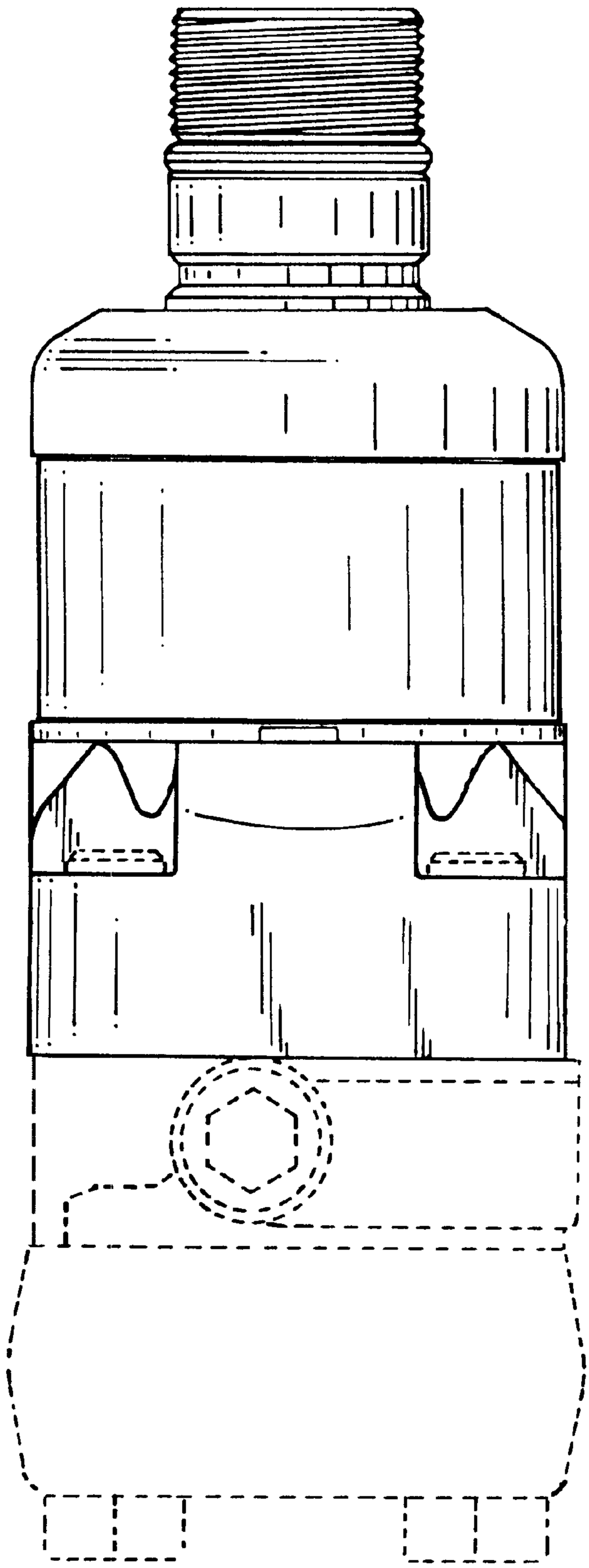

FIG. 4

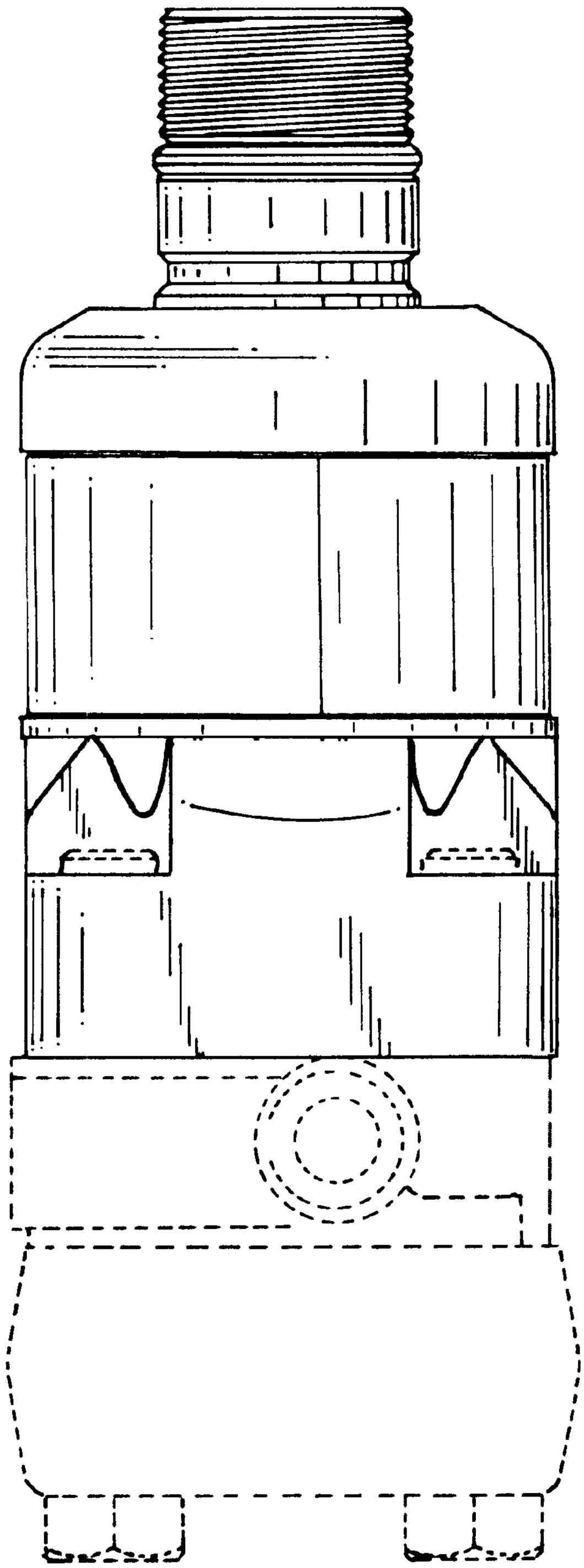

FIG. 5

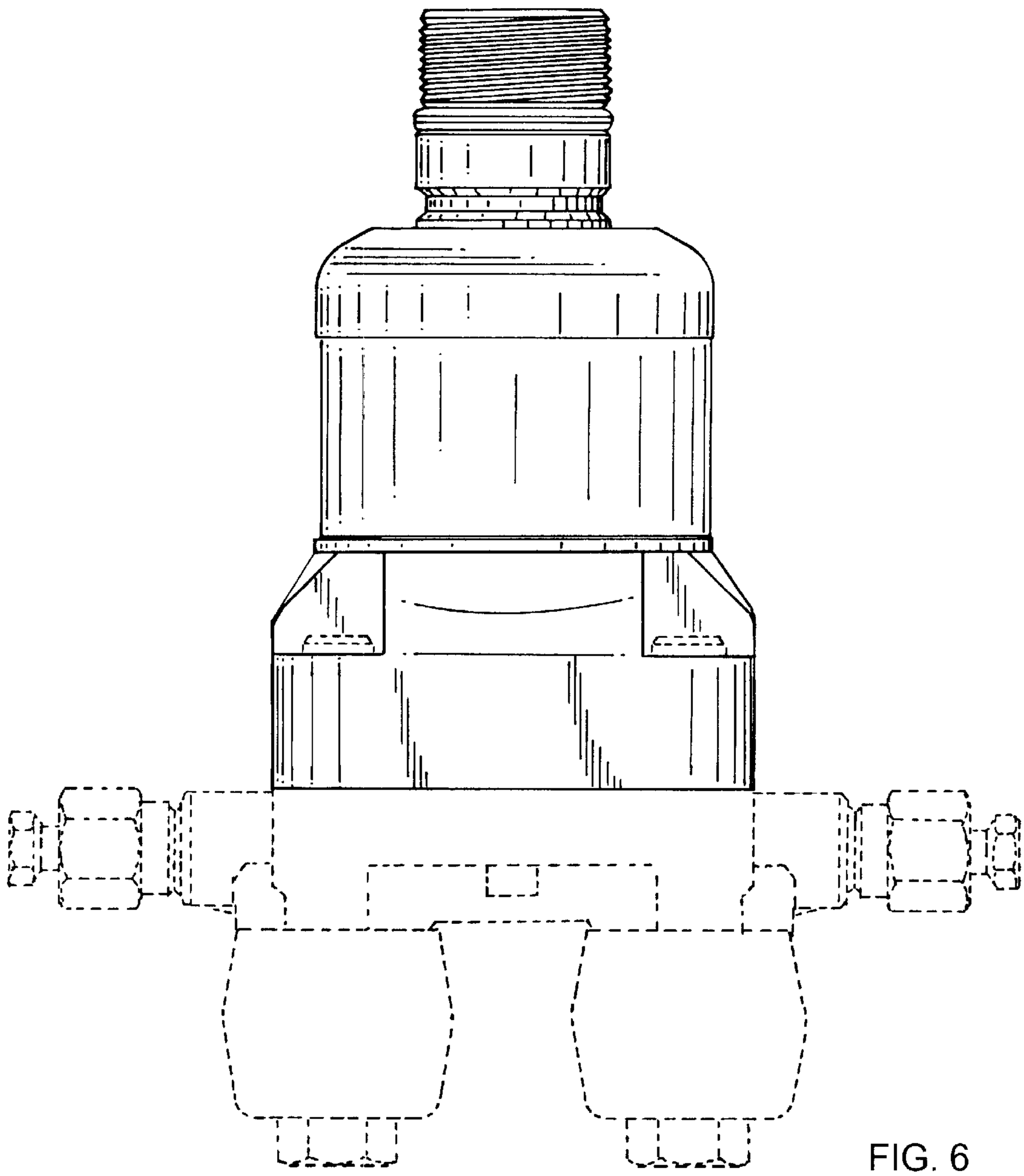

FIG. 6

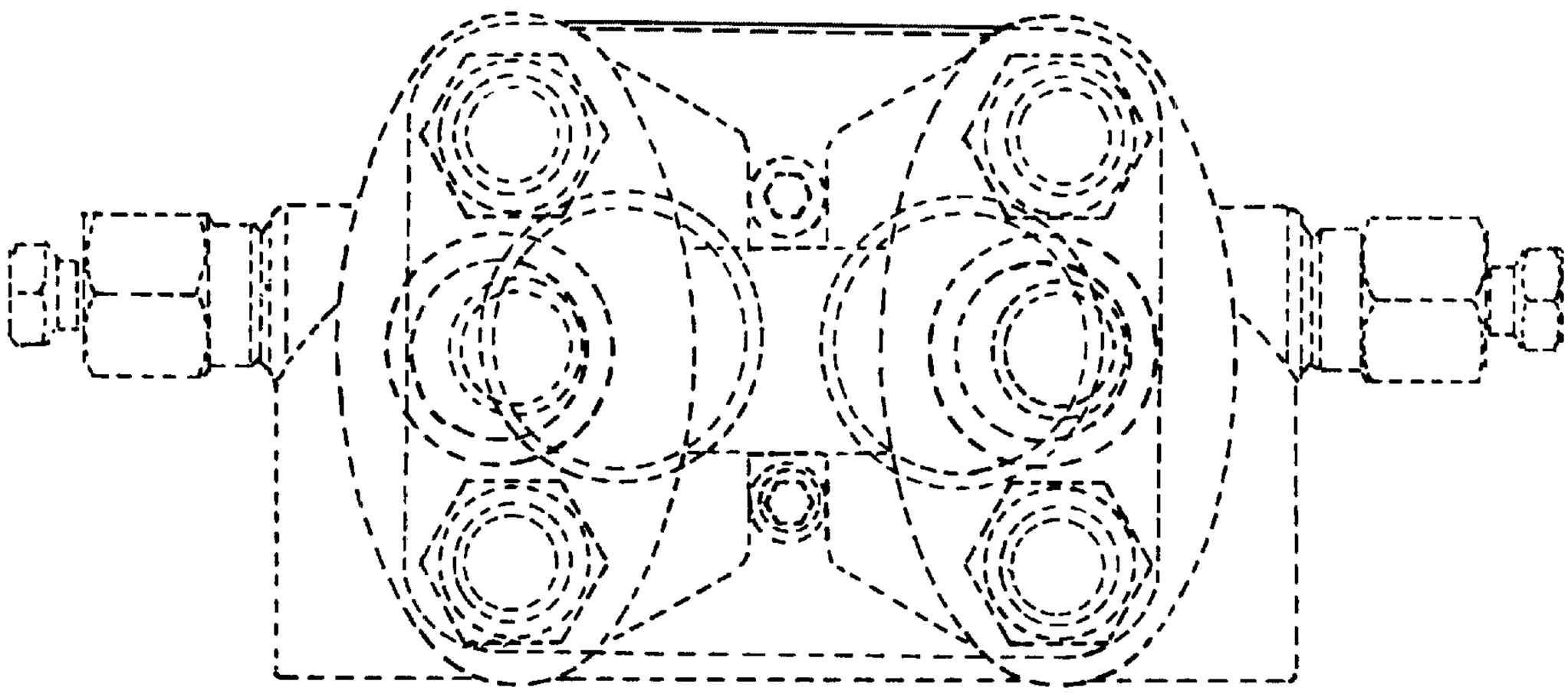

FIG. 7

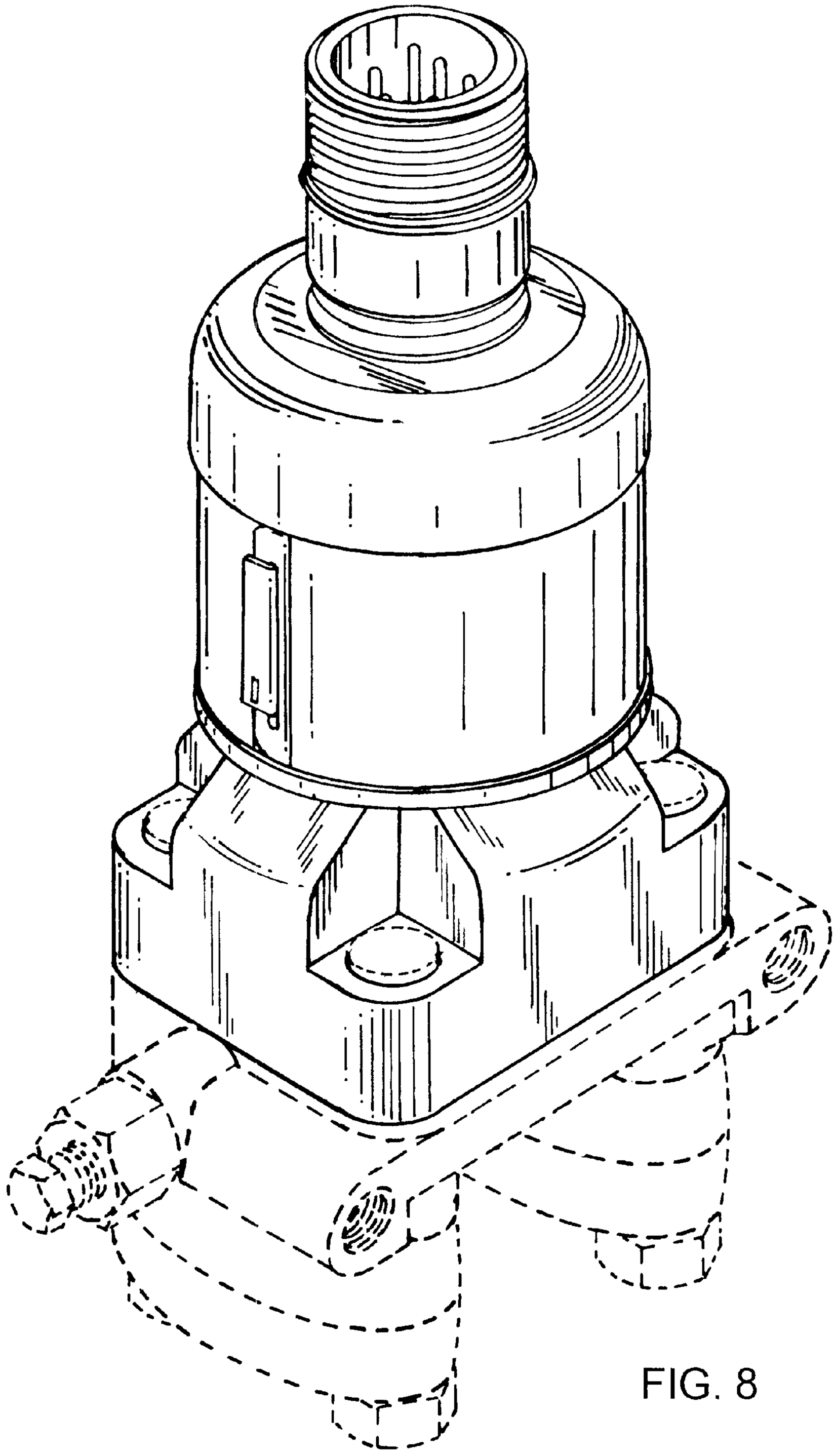

FIG. 8

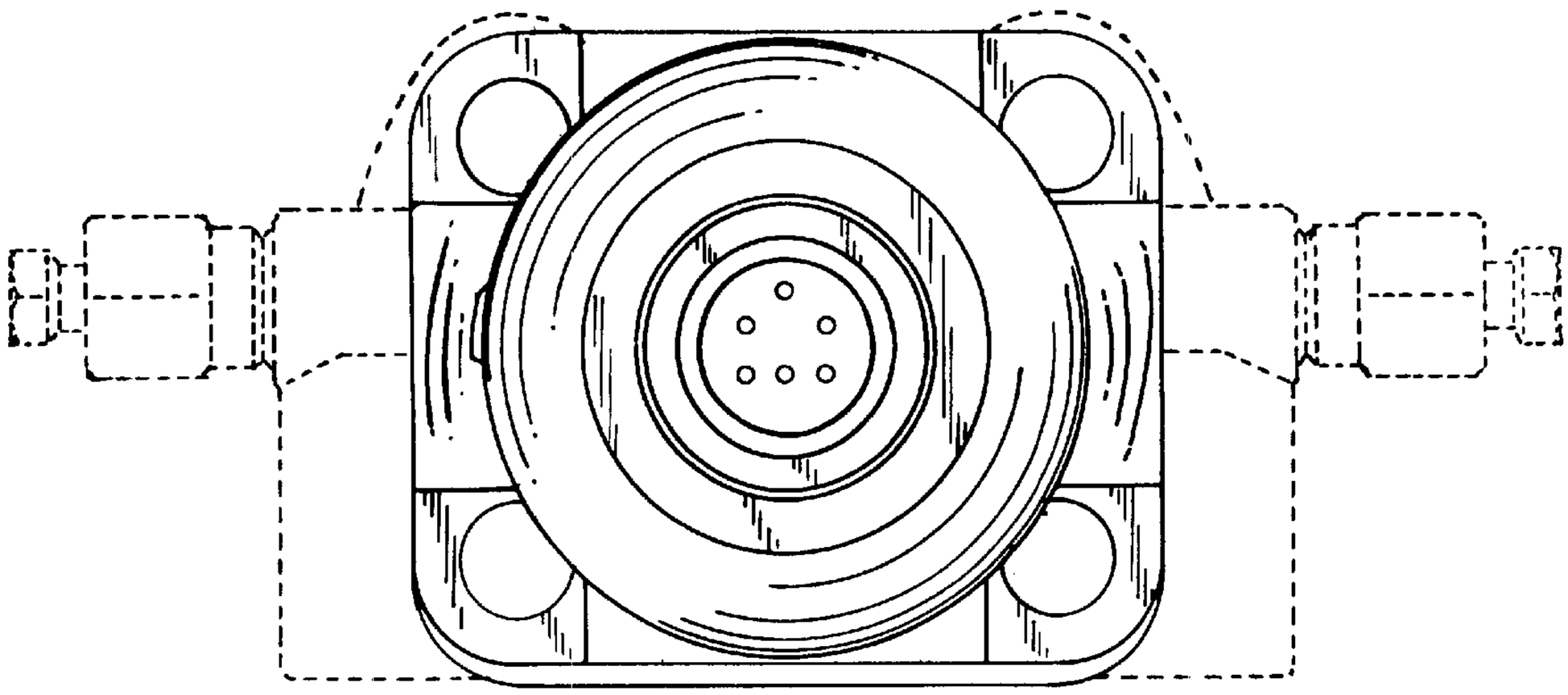

FIG. 9

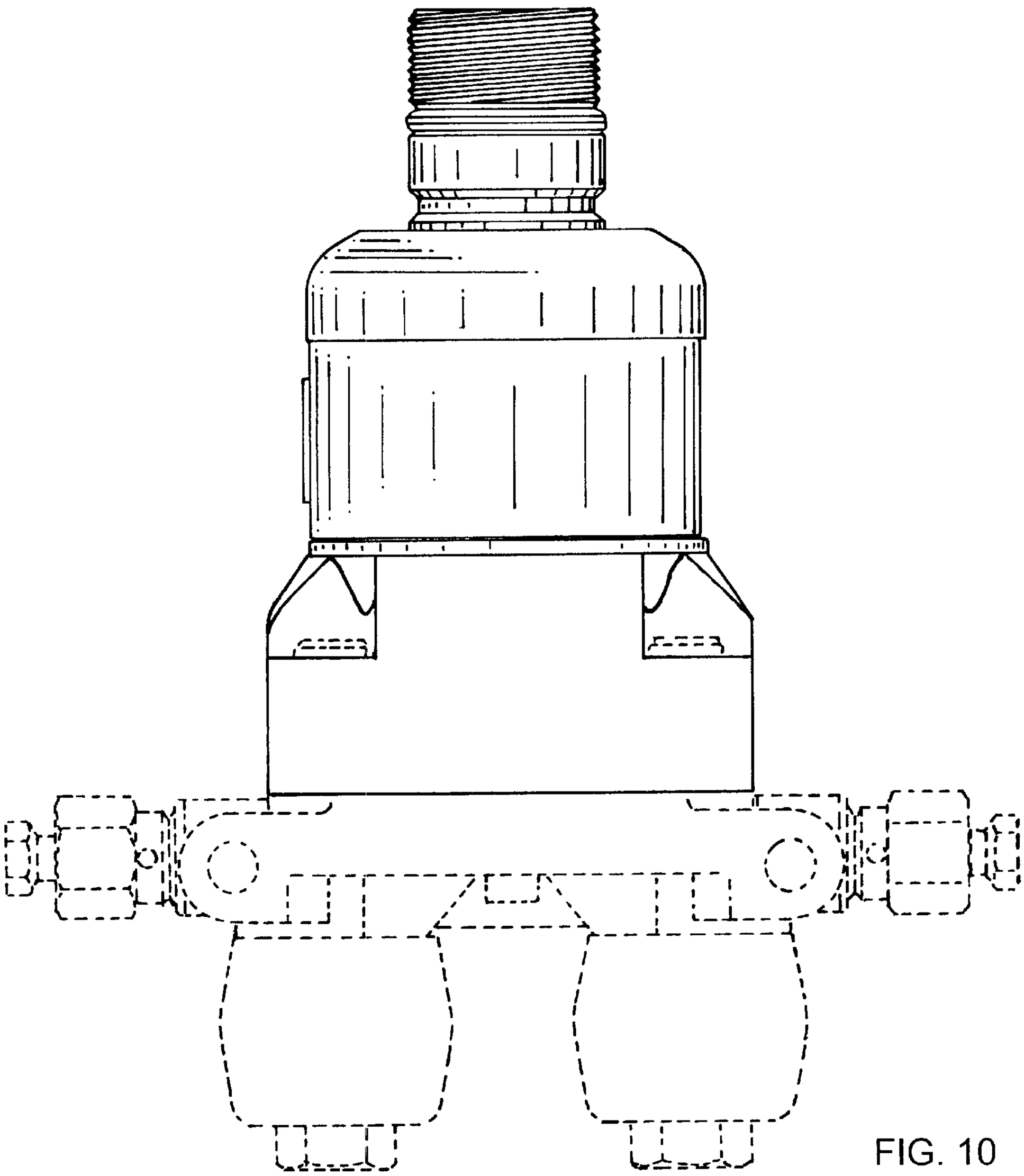

FIG. 10

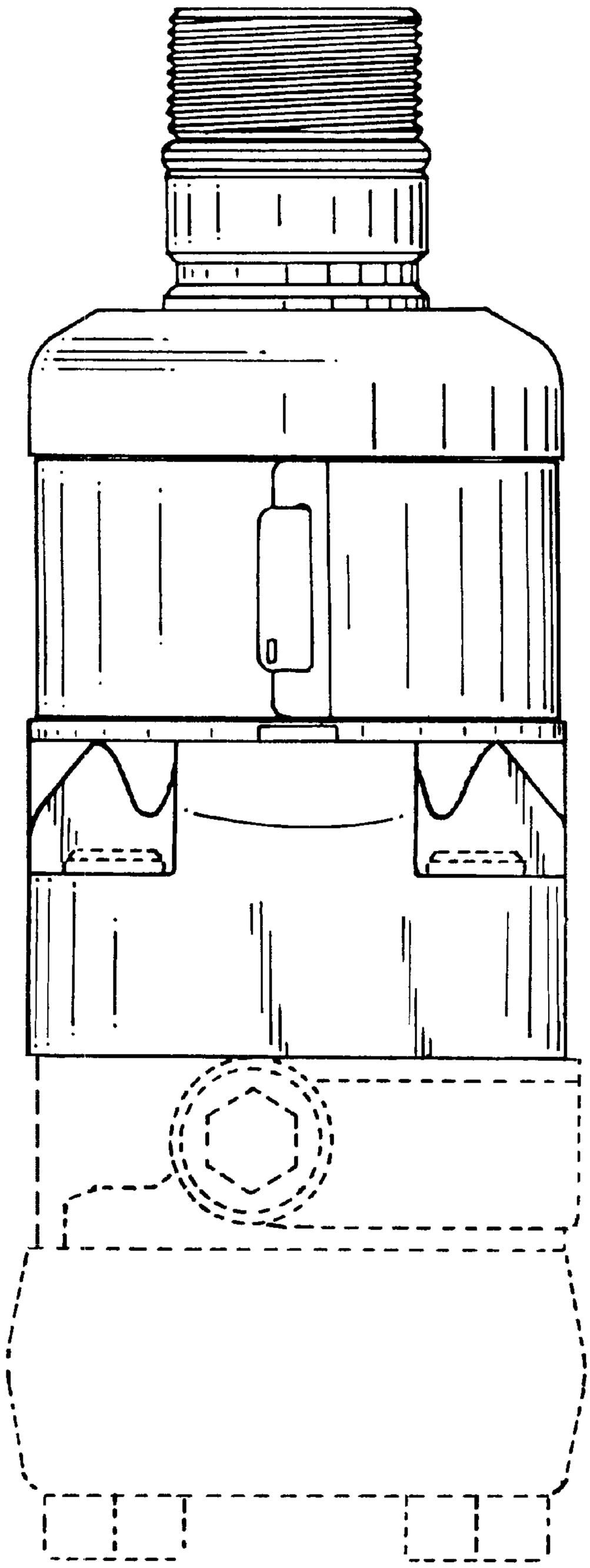

FIG. 11

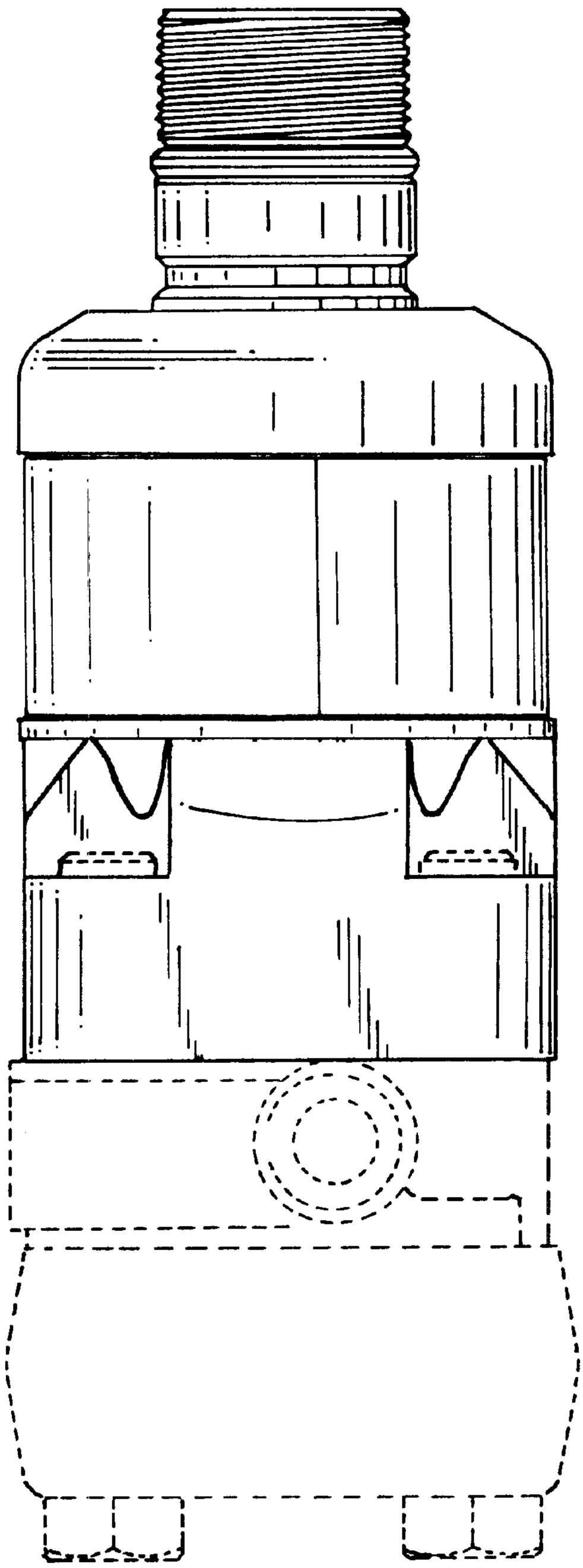

FIG. 12

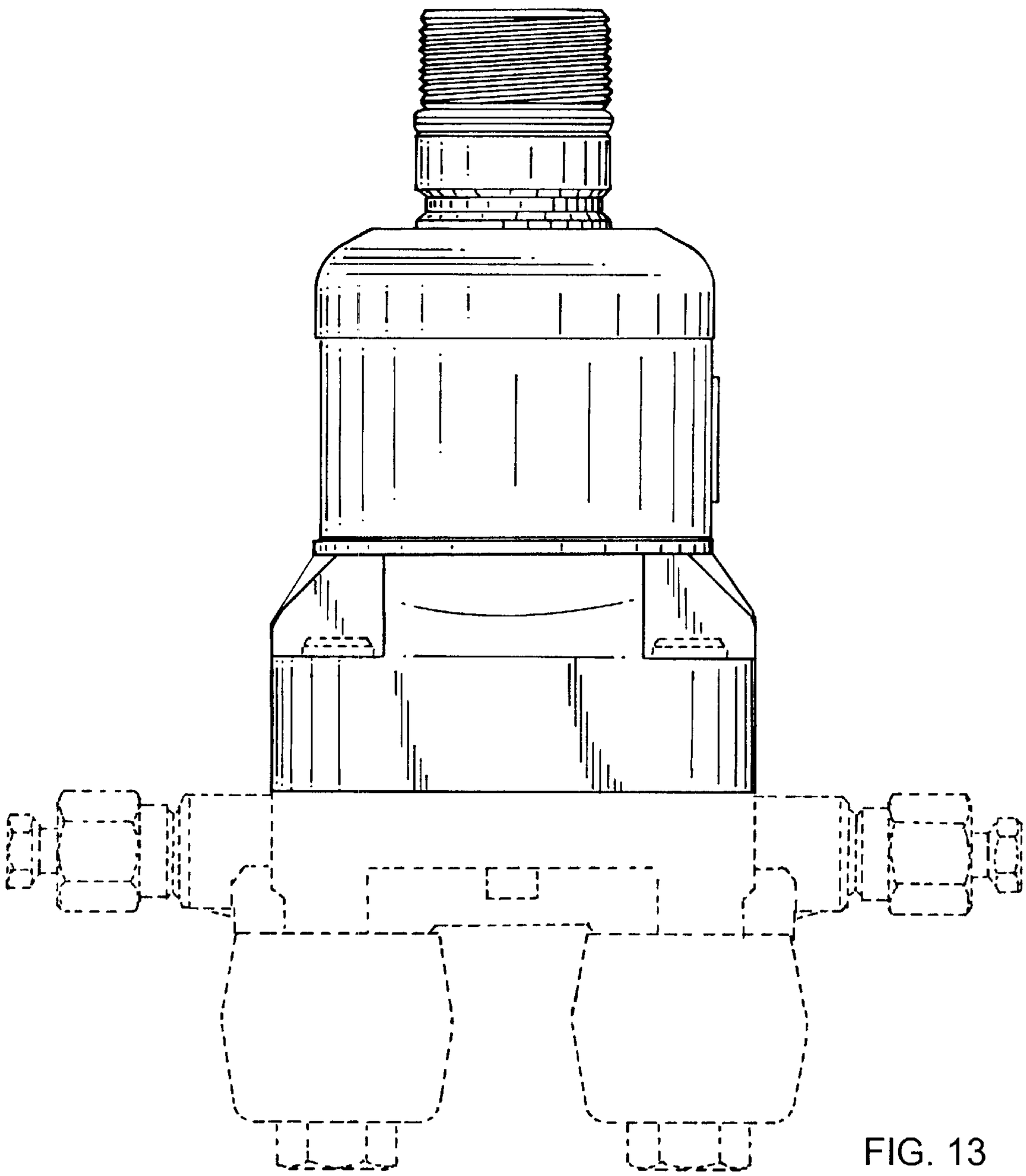

FIG. 13

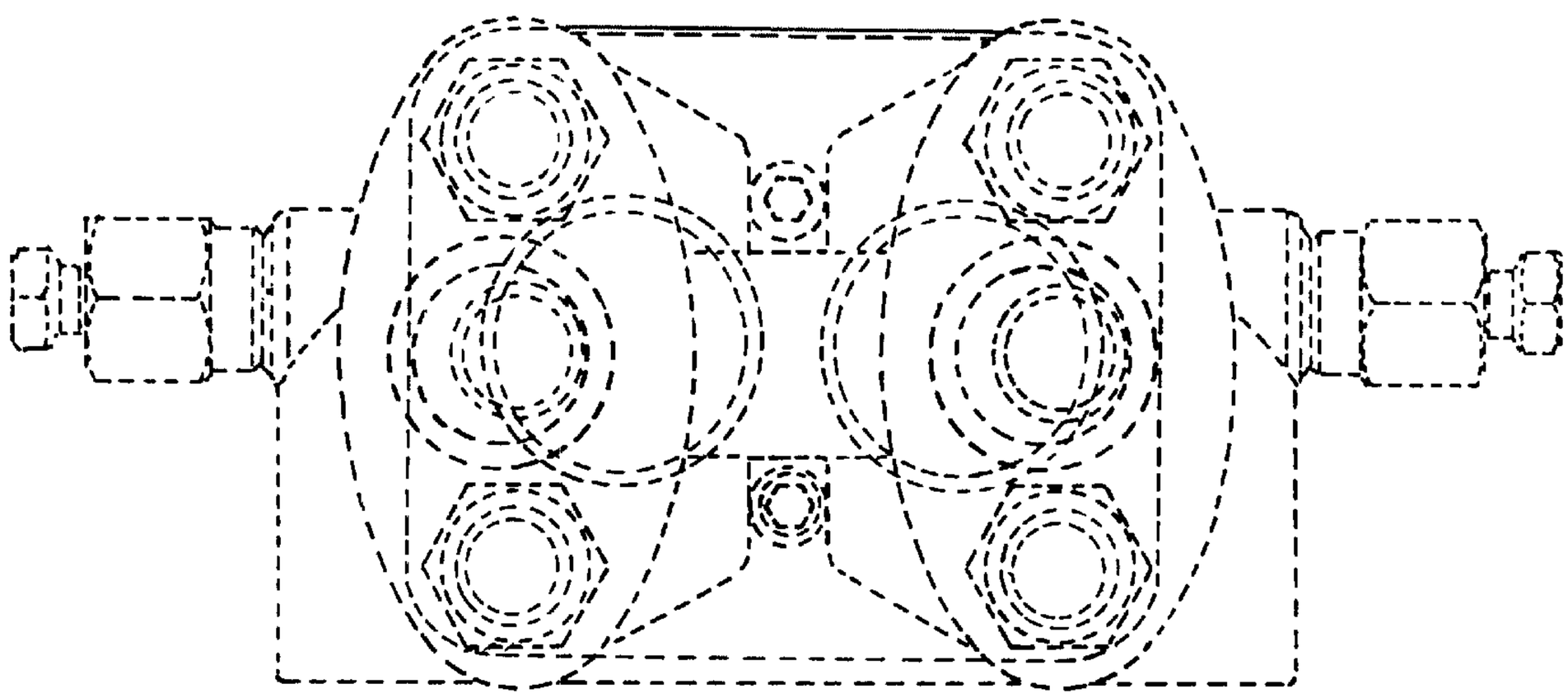

FIG. 14

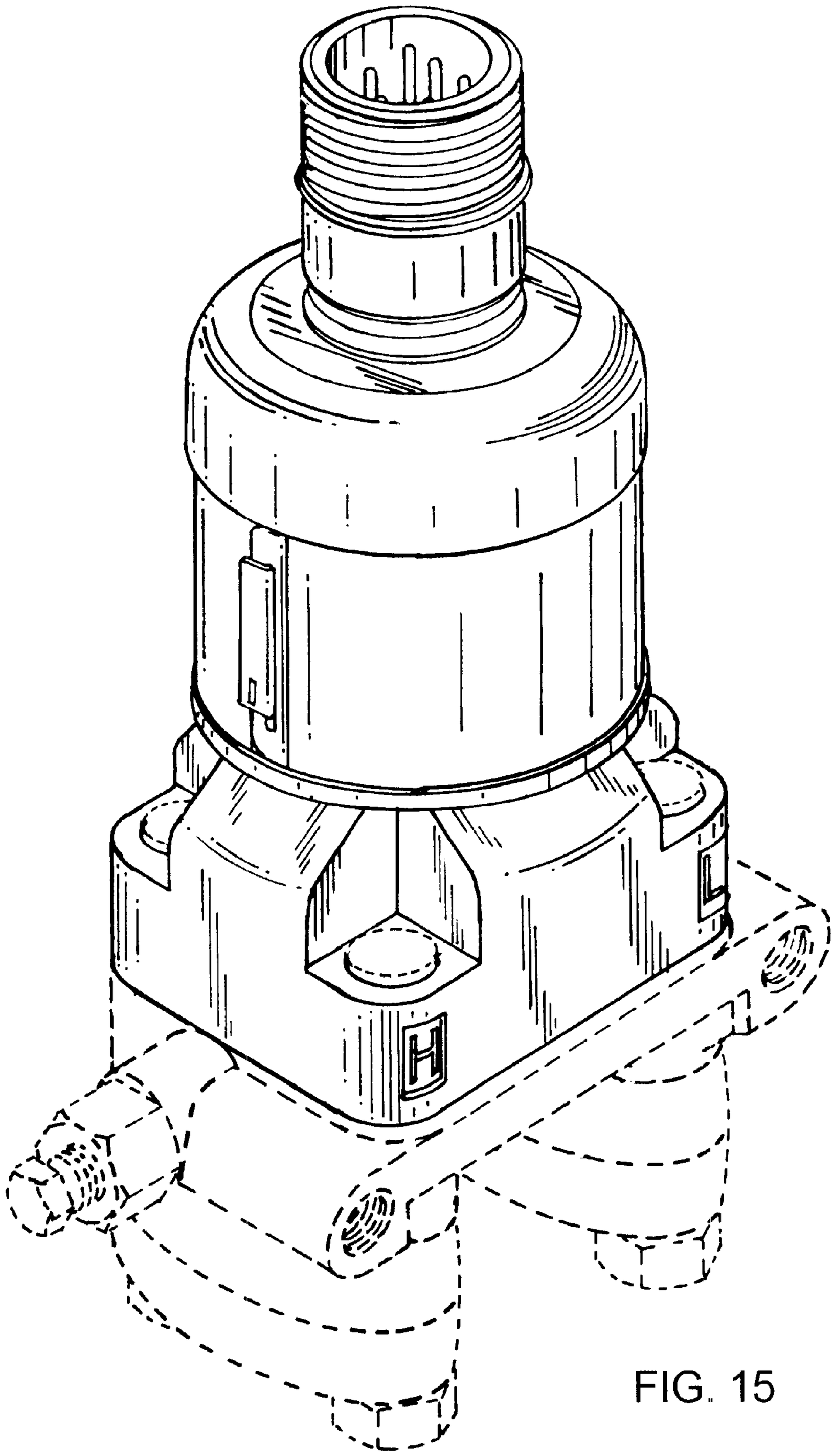

FIG. 15

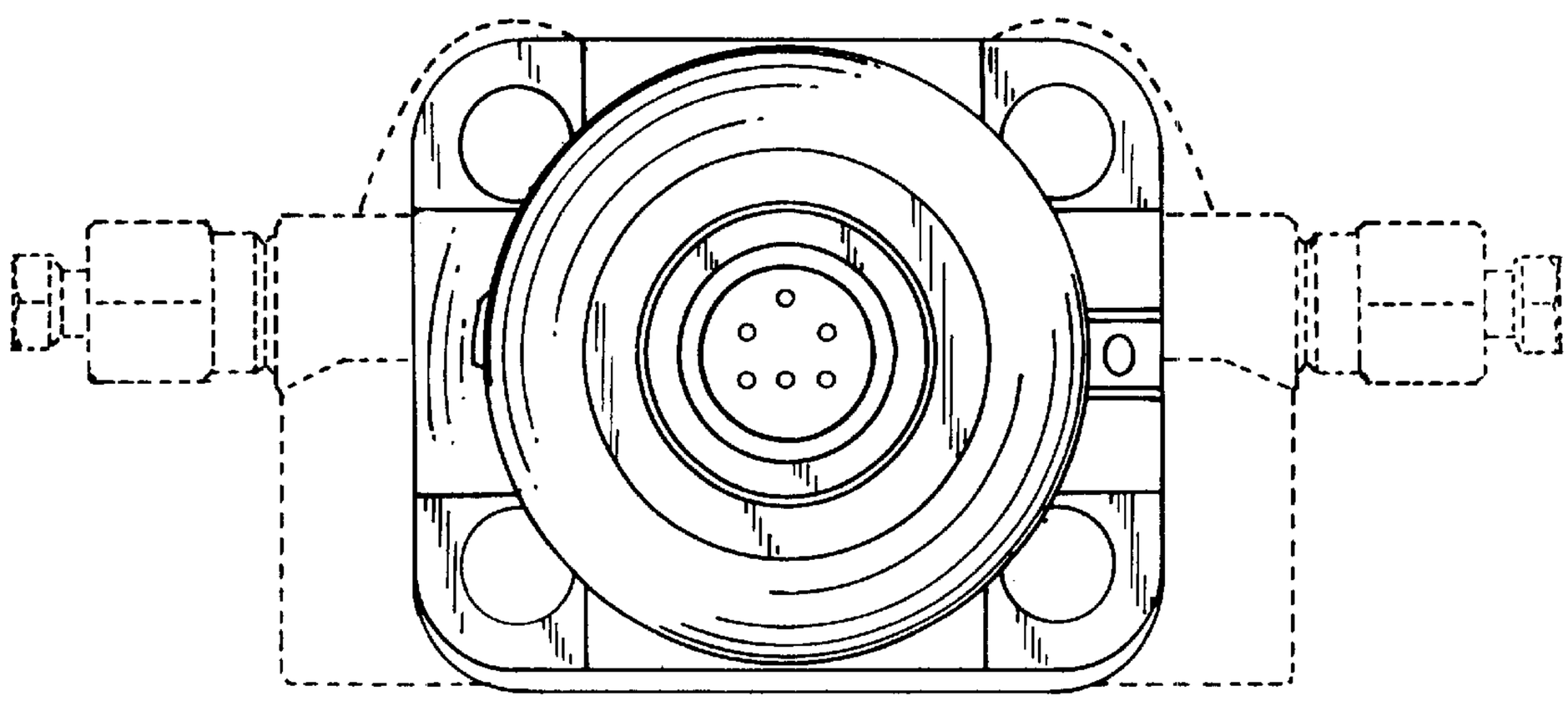

FIG. 16

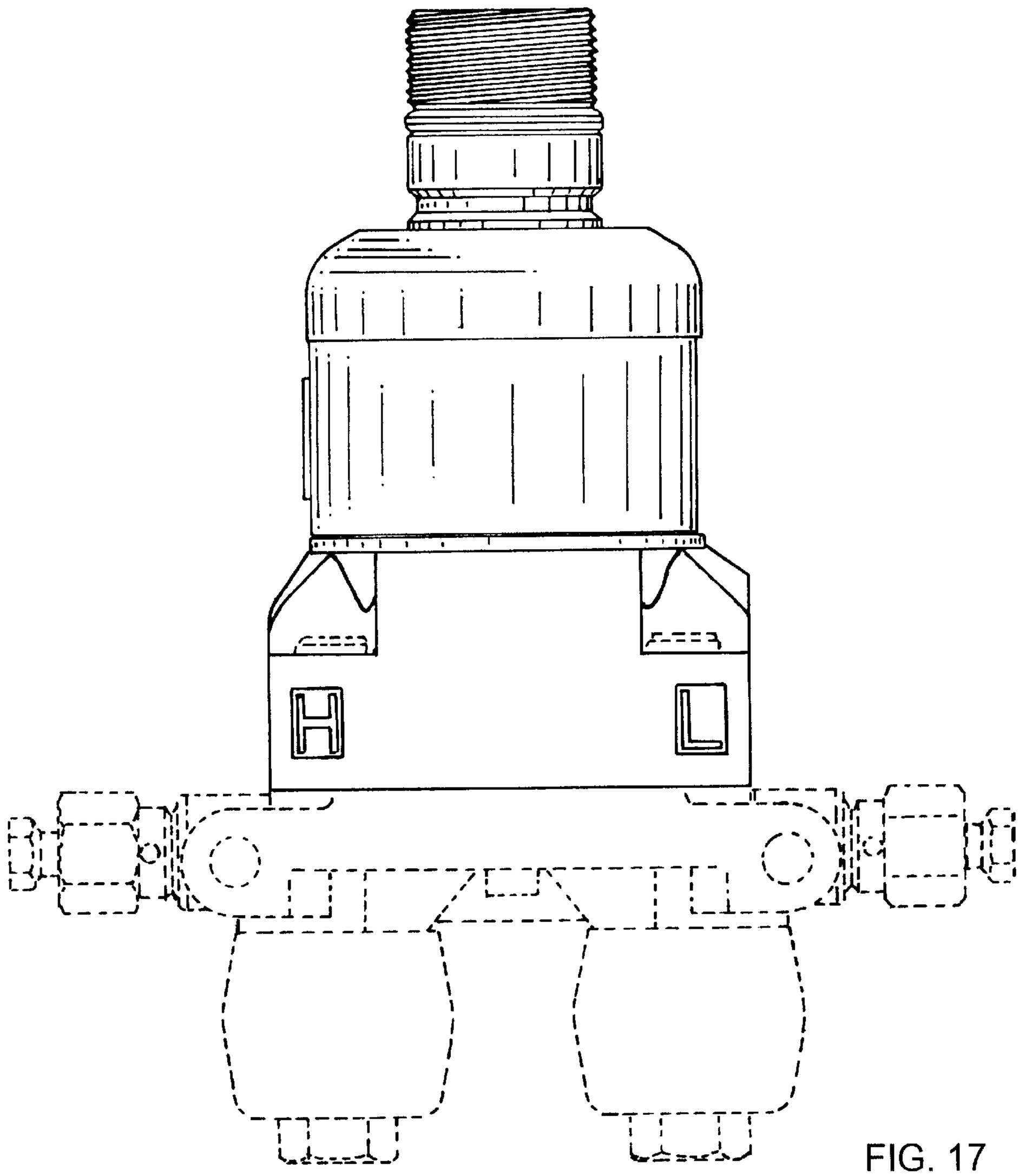

FIG. 17

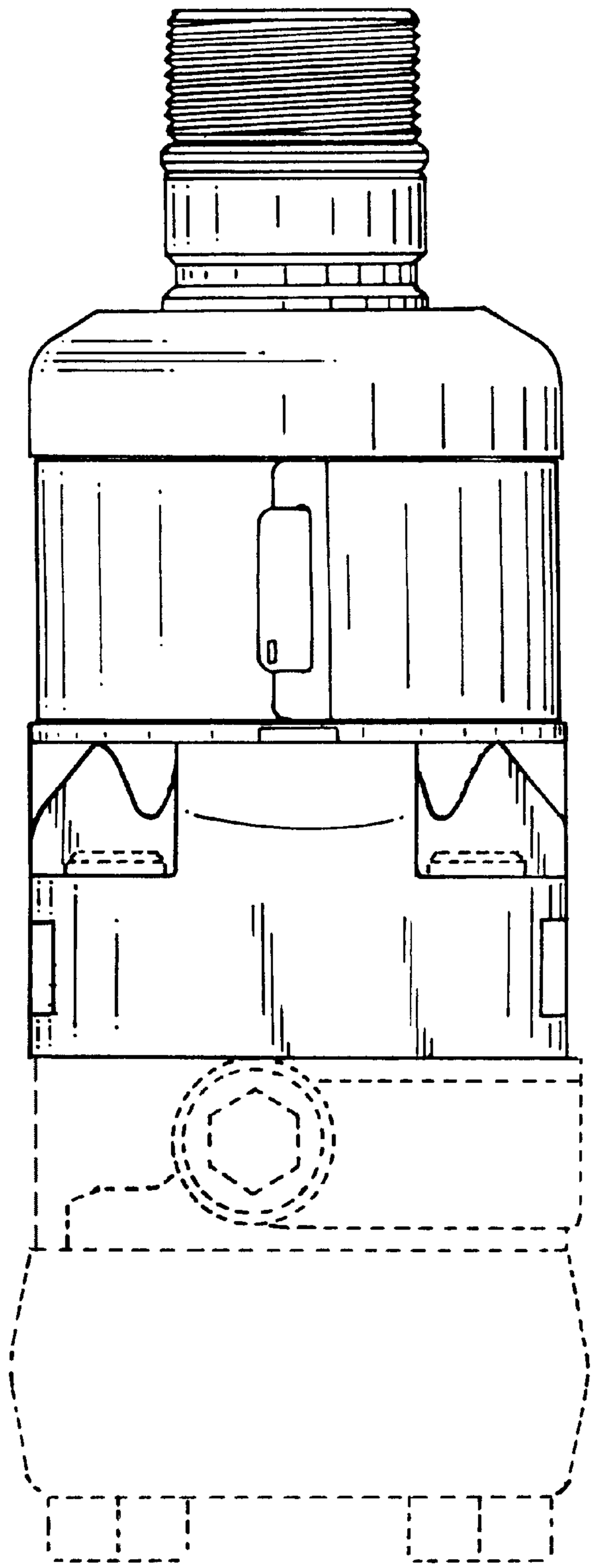

FIG. 18

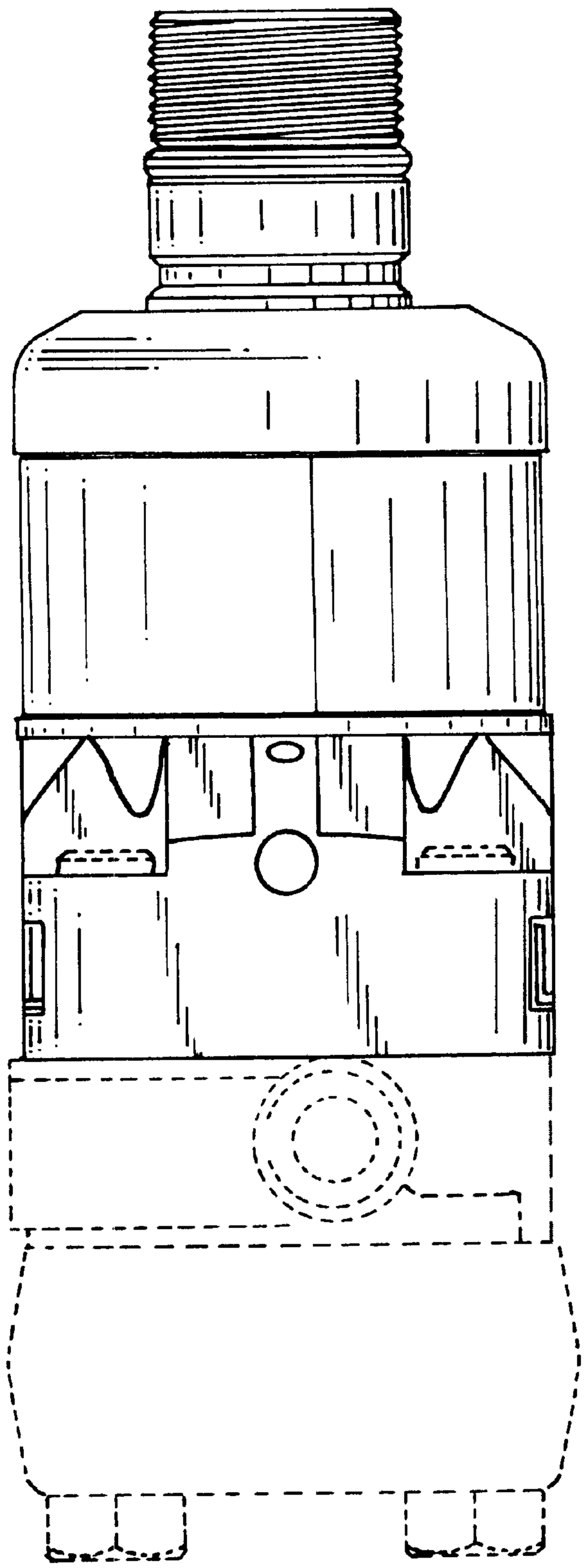

FIG. 19

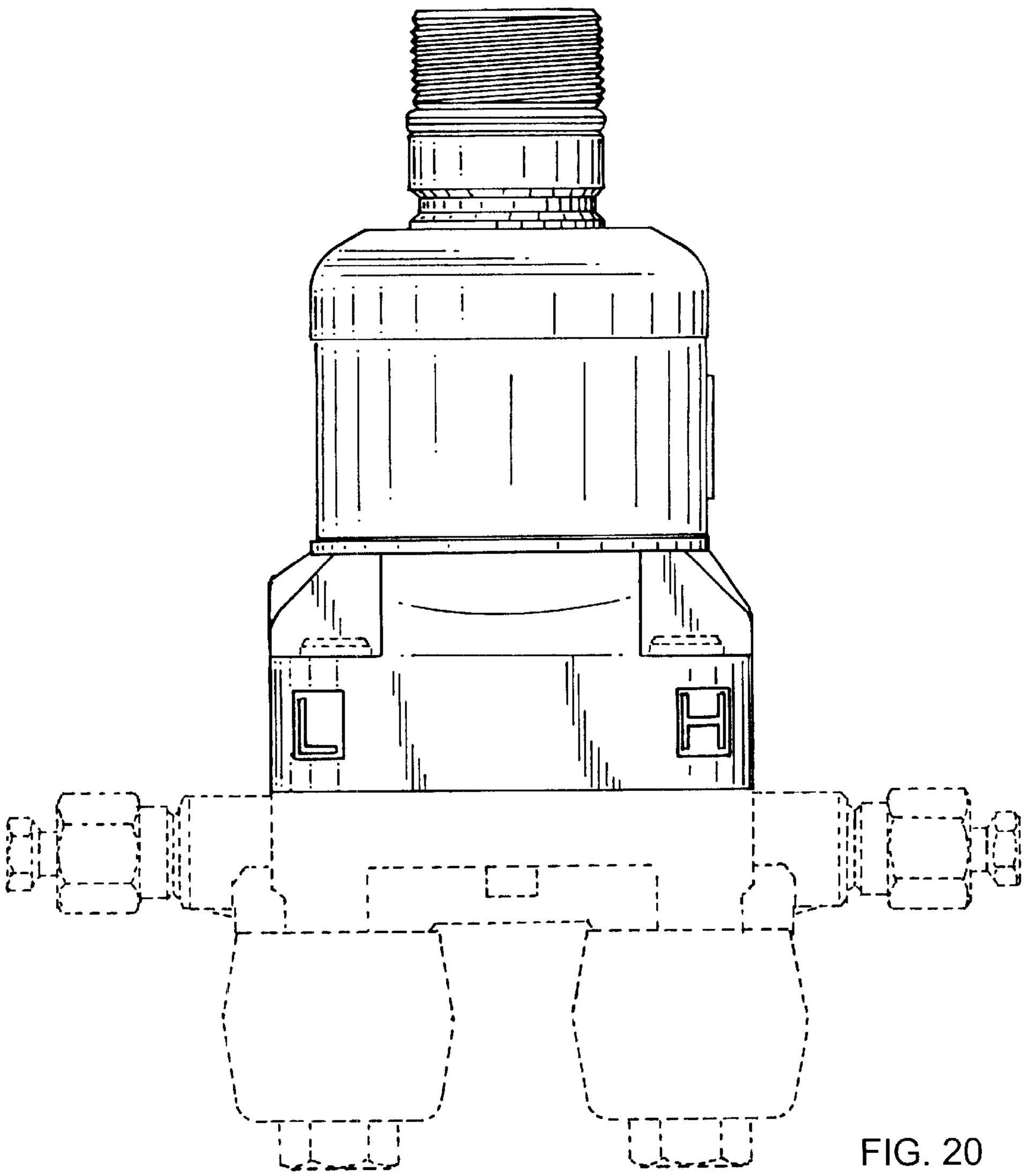

FIG. 20

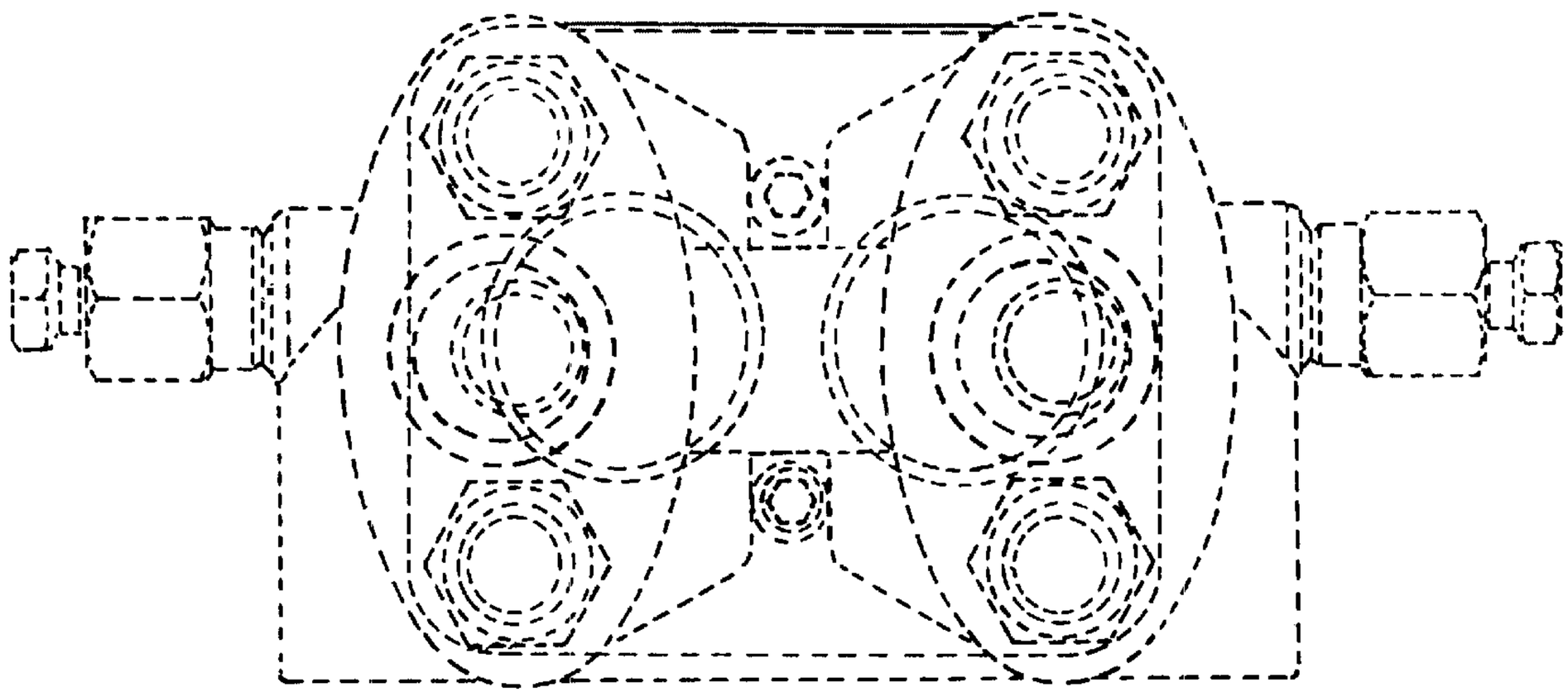

FIG. 21

UNITED STATES PATENT AND TRADEMARK OFFICE

CERTIFICATE OF CORRECTION

PATENT NO. : Des. 471,829 S
DATED : March 18, 2003
INVENTOR(S) : Dennis et al.

It is certified that error appears in the above-identified patent and that said Letters Patent is hereby corrected as shown below:

Title page,
Item [56], **References Cited**, OTHER PUBLICATIONS, add the following:

-- Product Data Sheet No: 00813-0100-4592, "Model 2024 Differential Pressure Transmitter", by Rosemount Inc., Eden Prairie, Minnesota, (1987-1995). --

Signed and Sealed this

Twenty-second Day of July, 2003

JAMES E. ROGAN
Director of the United States Patent and Trademark Office