US00D465280S

(12) United States Design Patent

Huntley et al.

(10) Patent No.: US D465,280 S
(45) Date of Patent: ** Nov. 5, 2002

(54) **ELECTROSURGICAL INSTRUMENT ICON**

(75) Inventors: **Scott P. Huntley**, Danville, CA (US); **Andre de Salis**, Pasadena, CA (US)

(73) Assignee: **Neothermia Corporation**, Natick, MA (US)

(**) Term: **14 Years**

(21) Appl. No.: **29/144,938**

(22) Filed: **Jul. 12, 2001**

(51) **LOC (7) Cl.** **24-02**
(52) **U.S. Cl.** **D24/144**; D14/489; D24/170
(58) **Field of Search** D24/144, 170; D20/10, 11, 12; D14/489, 485; 606/37, 32, 39; 600/564

(56) **References Cited**

U.S. PATENT DOCUMENTS

4,593,691	A	*	6/1986	Lindstrom et al.	D24/170
4,903,696	A	*	2/1990	Stasz et al.	606/37
D351,655	S	*	10/1994	Smith et al.	D24/144
D395,292	S	*	6/1998	Vu	D14/489
D396,108	S	*	7/1998	Garito et al.	D24/144
D411,622	S	*	6/1999	Hall	D24/144
6,277,083	B1	*	8/2001	Eggers et al.	600/564

* cited by examiner

Primary Examiner—Ian Simmons
(74) *Attorney, Agent, or Firm*—Mueller and Smith, LPA

(57) **CLAIM**

The ornamental design for the electrosurgical instrument icon, as shown and described.

DESCRIPTION

A portion of the disclosure of this patent document contains material to which a claim for copyright is made. The copyright owner has no objection to the facsimile reproduction by anyone of the patent document or patent disclosure, as it appears in the Patent and Trademark office patent file or records, but reserves all other copyright rights whatsoever.

FIG. **1** is a perspective view of the application of the ornamental design of the electrosurgical instrument icon to an electrosurgical tissue recovery instrument, showing my new design; and,

FIG. **2** is a front view thereof.

The broken lines, showing the medical device environmental structure, are for illustrative purposes only and form no part of the claimed design. Other views or surfaces, not shown, do not depict the design element.

1 Claim, 1 Drawing Sheet

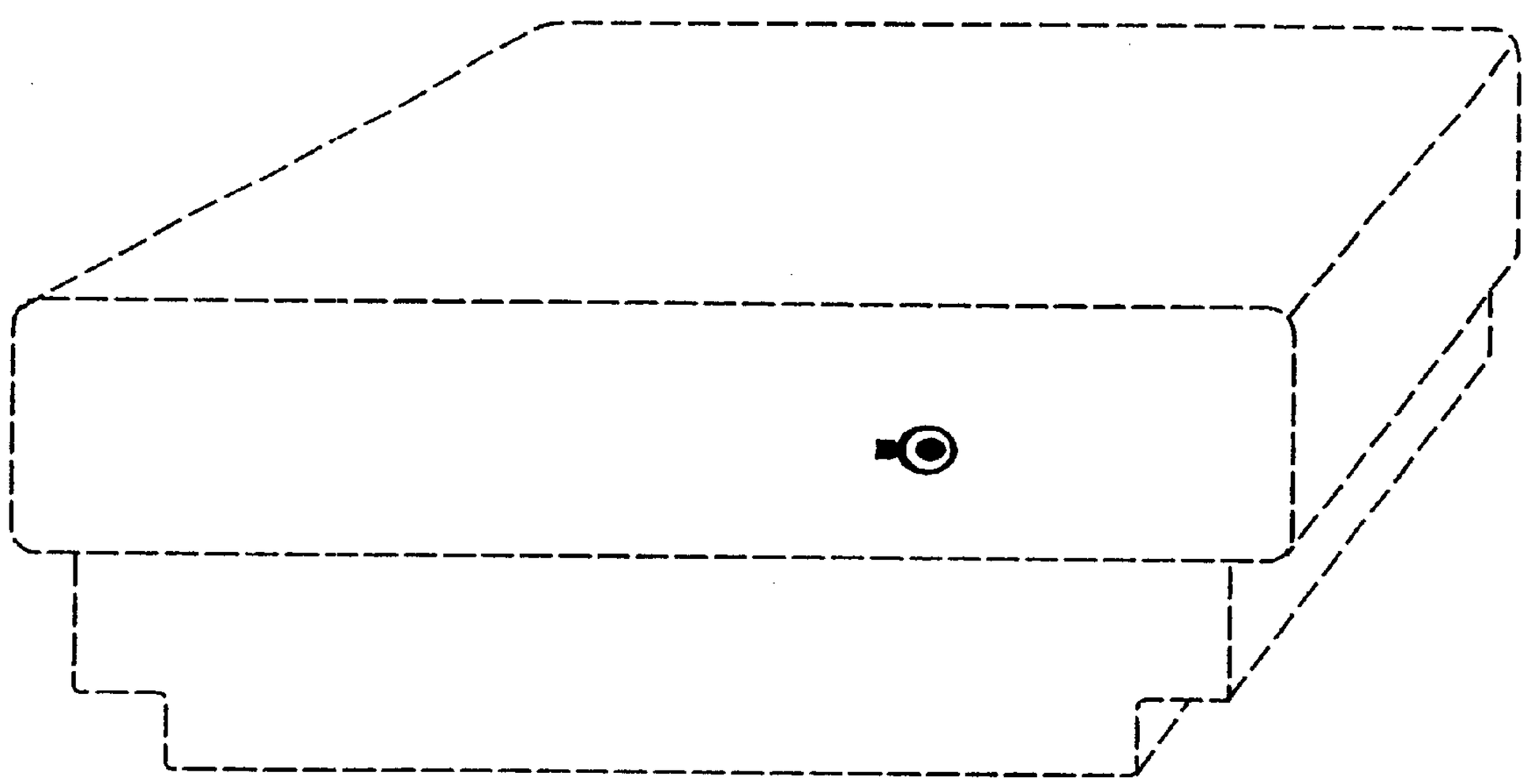

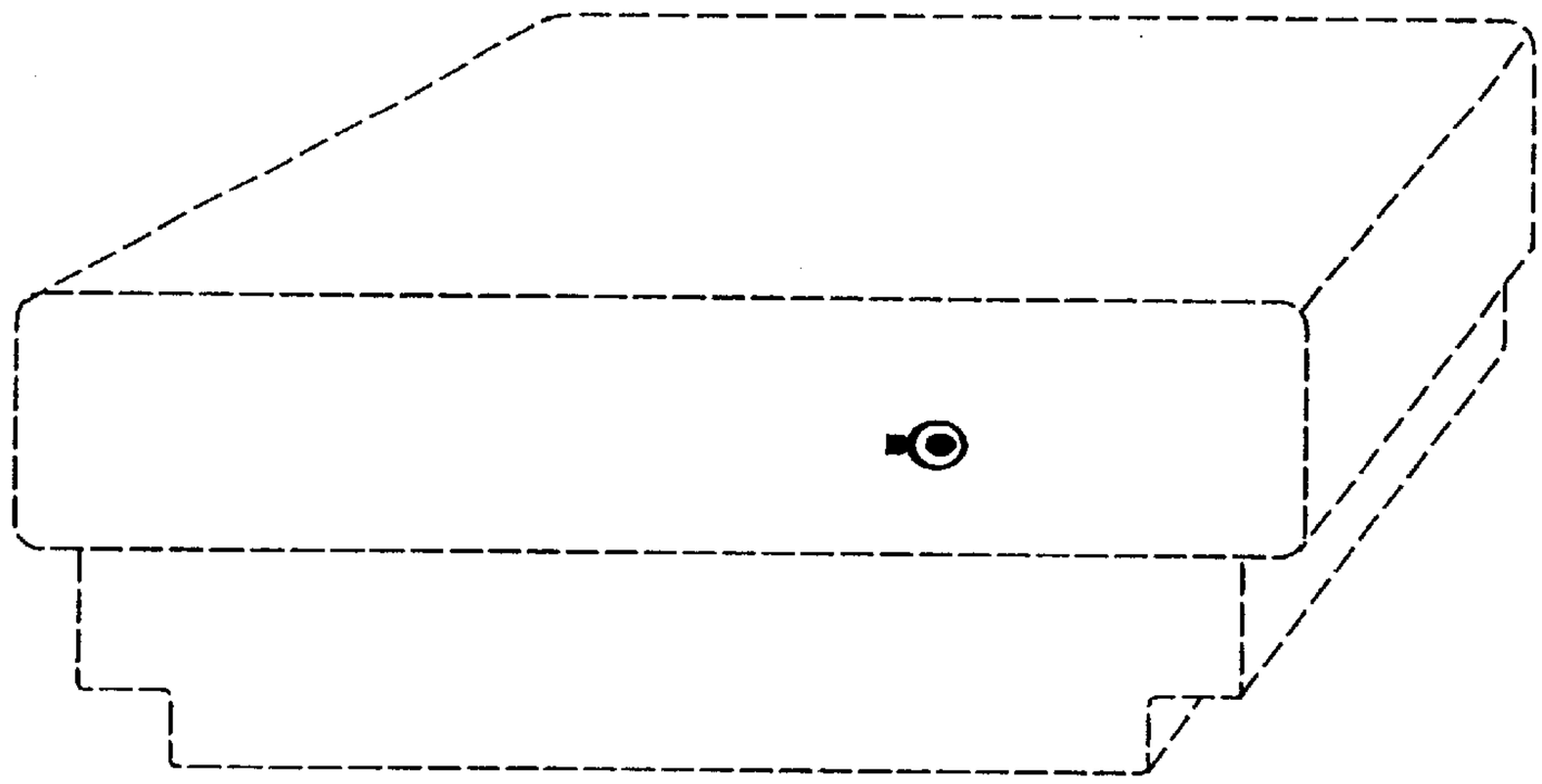

FIG. 1

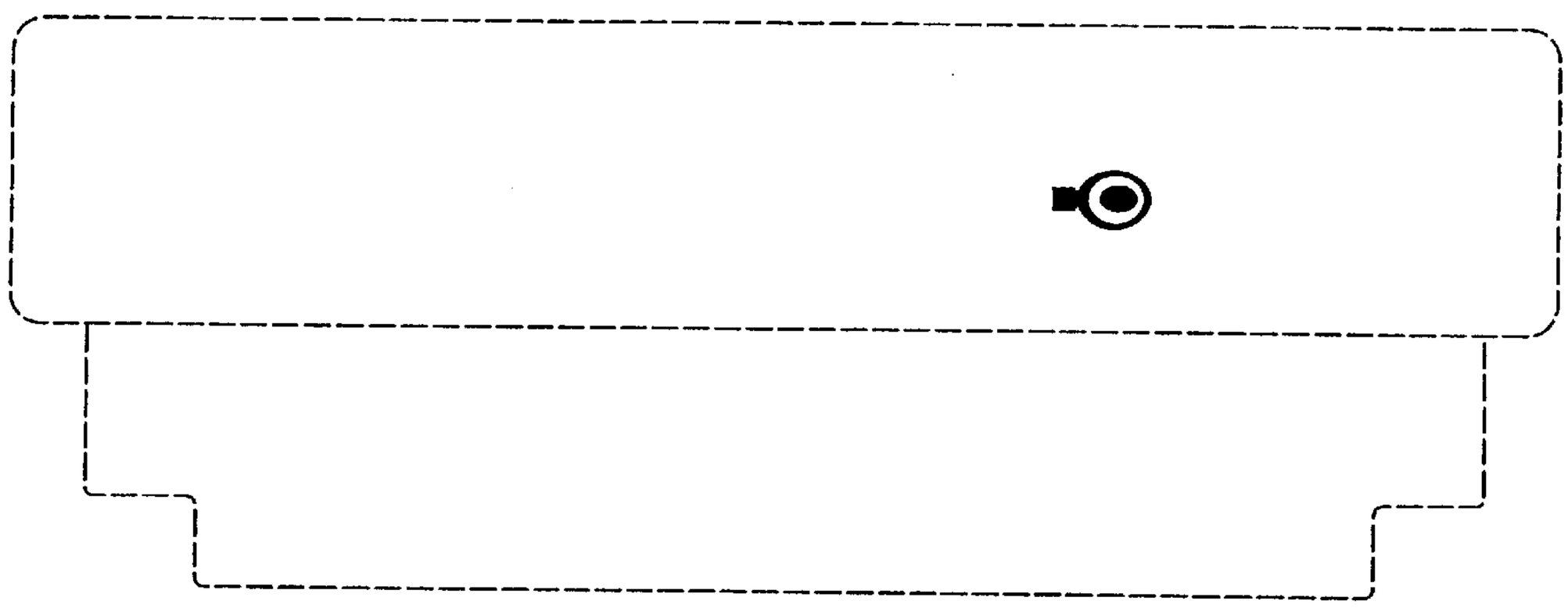

FIG. 2