US00D458783S

(12) United States Design Patent

Ong

(10) Patent No.: US D458,783 S
(45) Date of Patent: ** Jun. 18, 2002

(54) **TISSUE BOX COVER WITH RECESSED CORNERS**

(76) Inventor: **Bon S. Ong**, Box 4247, Torrance, CA (US) 90510

(**) Term: **14 Years**

(21) Appl. No.: **29/150,964**

(22) Filed: **Dec. 3, 2001**

(51) **LOC (7) Cl.** **20-02**
(52) **U.S. Cl.** **D6/518**
(58) **Field of Search** D6/515–523; 206/804, 206/812; 211/13.1, 48, 49; 221/22, 33, 45, 286; 312/34.1, 34.4

(56) **References Cited**

U.S. PATENT DOCUMENTS

D208,206 S	*	8/1967	Helgeson	D6/522
D371,708 S	*	7/1996	Haley et al.	D6/518
D372,386 S	*	8/1996	Kuchenbecker	D6/518
D390,391 S	*	2/1998	Hsu	D6/518
D403,189 S	*	12/1998	Isaacson	D6/518
D436,273 S	*	1/2001	Lange	D6/519

OTHER PUBLICATIONS

Ma Leck Catalogue (1980) p. 31, Tissue Box Covers ML 1550.

* cited by examiner

Primary Examiner—Brian N. Vinson
(74) *Attorney, Agent, or Firm*—Charles H. Thomas

(57) **CLAIM**

I claim the ornamental design for the article tissue box cover with recessed corners, as shown and described.

DESCRIPTION

FIG. **1** is a perspective view of one embodiment of a tissue box cover with recessed corners illustrating my new design;

FIG. **2** is a front elevational view thereof, it being understood that the undisclosed rear elevational view is identical thereto;

FIG. **3** is a left-side elevational view thereof, it being understood that the undisclosed right-side elevational view is identical thereto;

FIG. **4** is a top plan view thereof;

FIG. **5** is a bottom plan view thereof;

FIG. **6** is a perspective view of an alternative embodiment of a tissue box cover with recessed corners formed partially with wood grain surface appearances and showing my new design;

FIG. **7** is a front elevational view thereof, it being understood that the undisclosed rear elevational view is identical thereto;

FIG. **8** is a left-side elevational view thereof, it being understood that the undisclosed right-side elevational view is identical thereto;

FIG. **9** is a top plan view thereof;

FIG. **10** is a bottom plan view thereof;

FIG. **11** is a perspective view of an another alternative embodiment of a tissue box cover with recessed corners having smooth, plain surfaces and showing my new design;

FIG. **12** is a front elevational view thereof, it being understood that the undisclosed rear elevational view is identical thereto; and

FIG. **13** is a left-side elevational view thereof, it being understood that the undisclosed right-side elevational view is identical thereto.

FIG. **14** is a top plan view thereof; and,

FIG. **15** is a bottom plan view thereof.

1 Claim, 9 Drawing Sheets

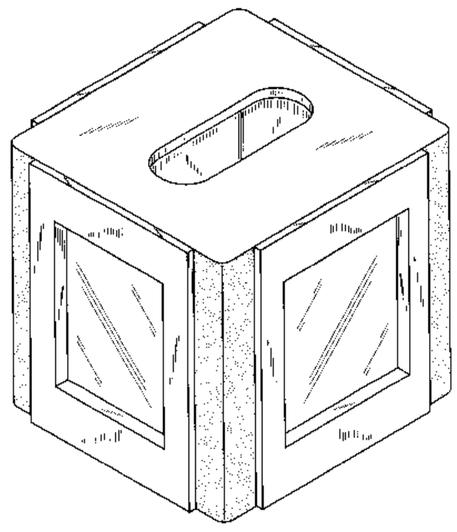

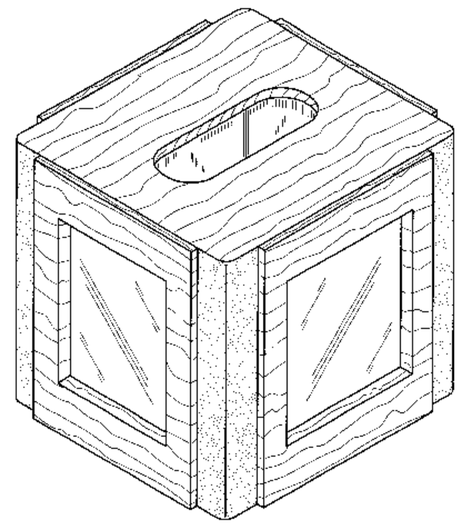

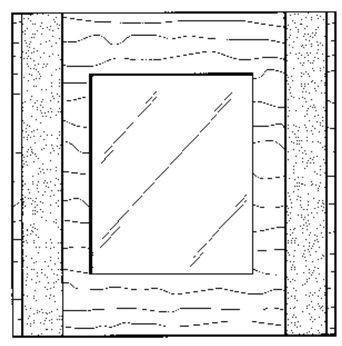

FIG. 1

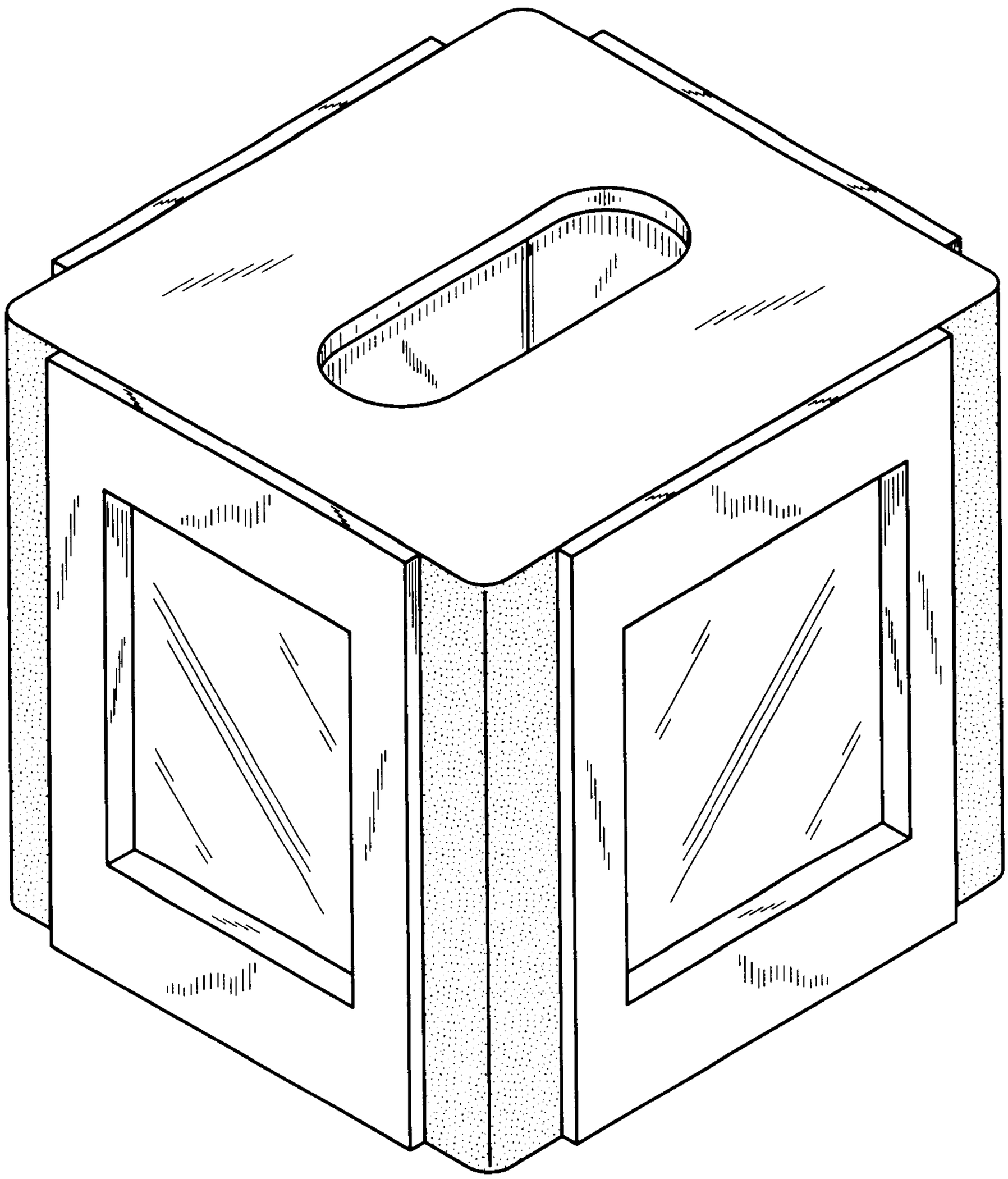

FIG. 3

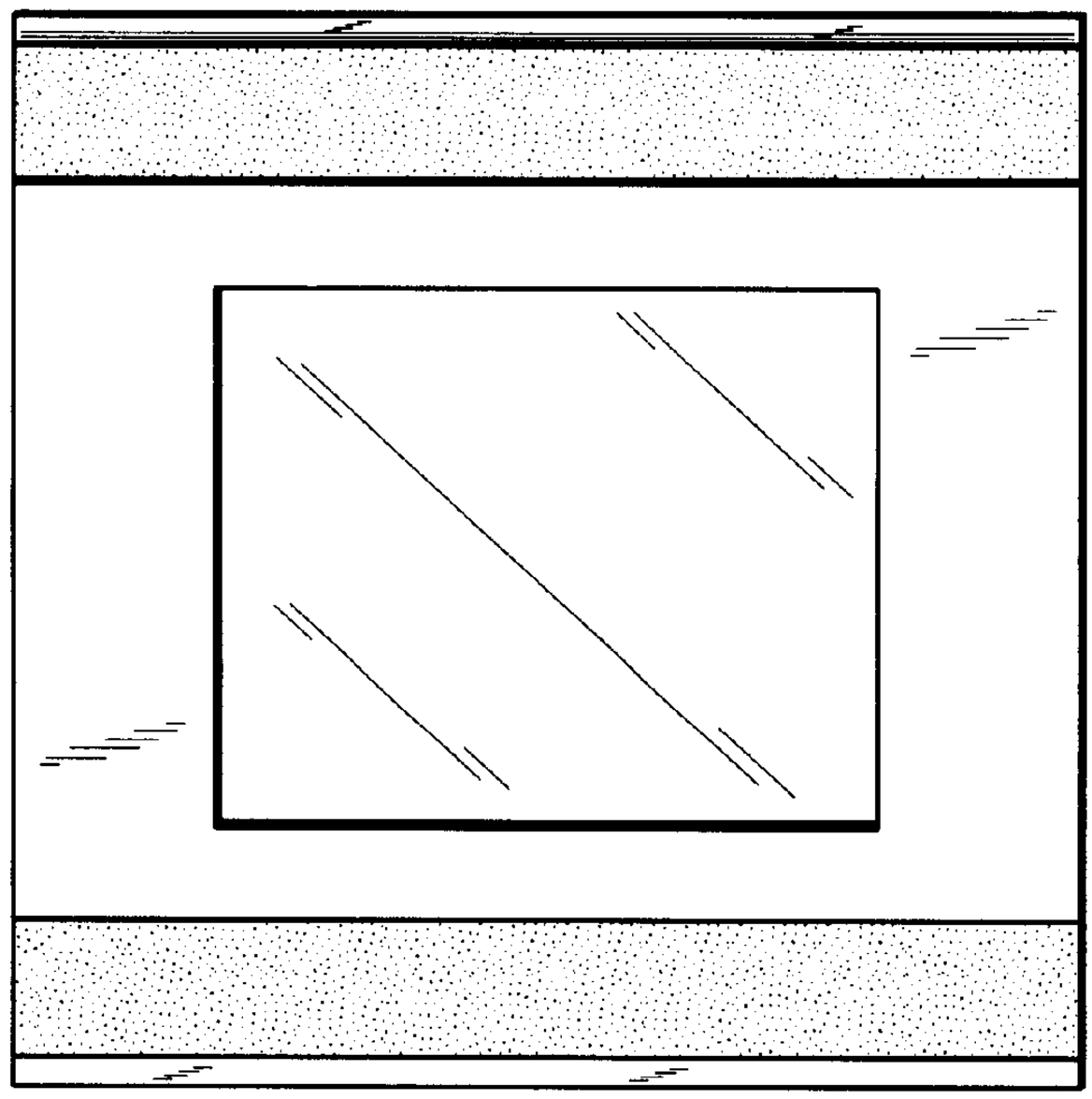

FIG. 2

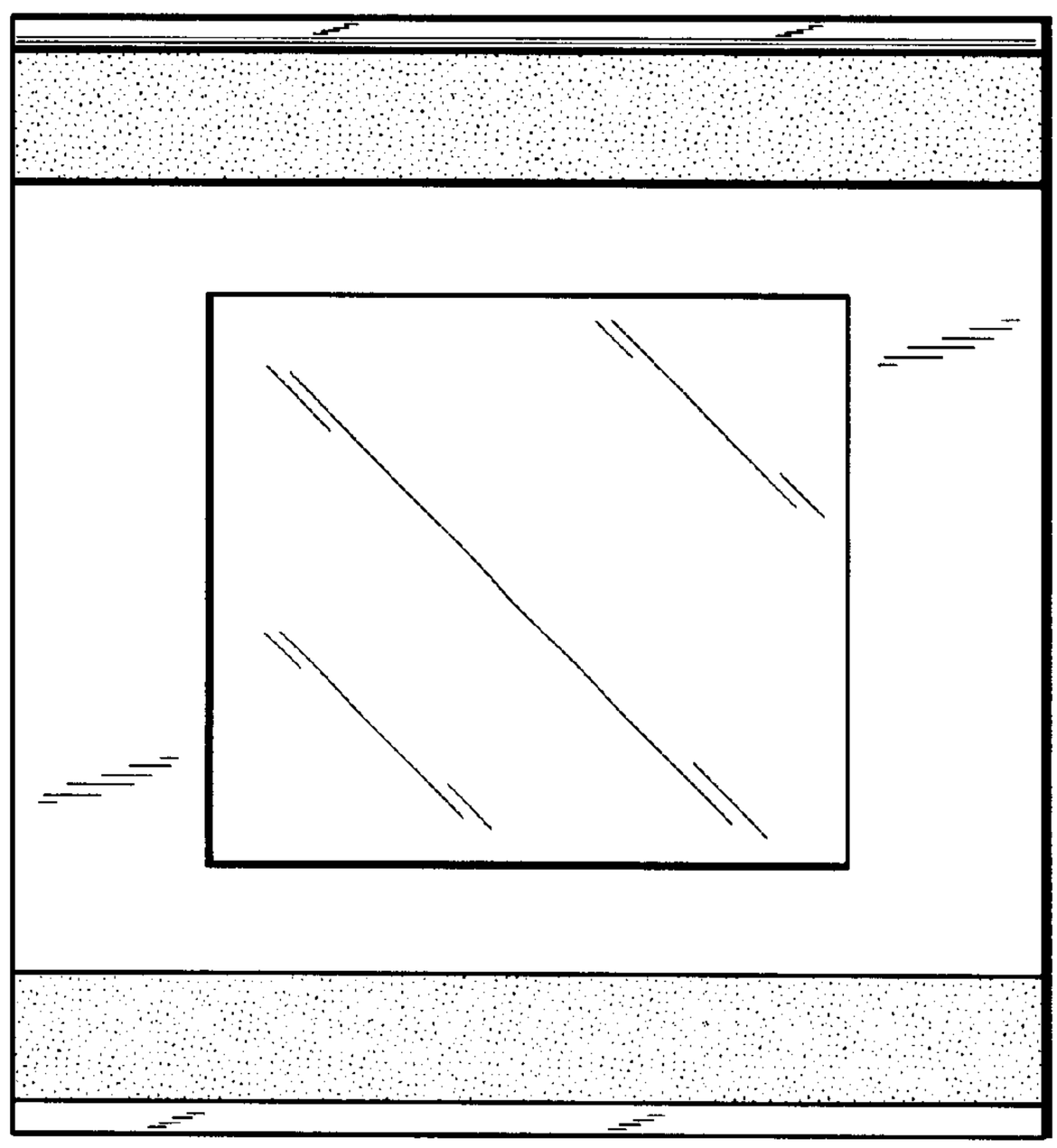

FIG. 4

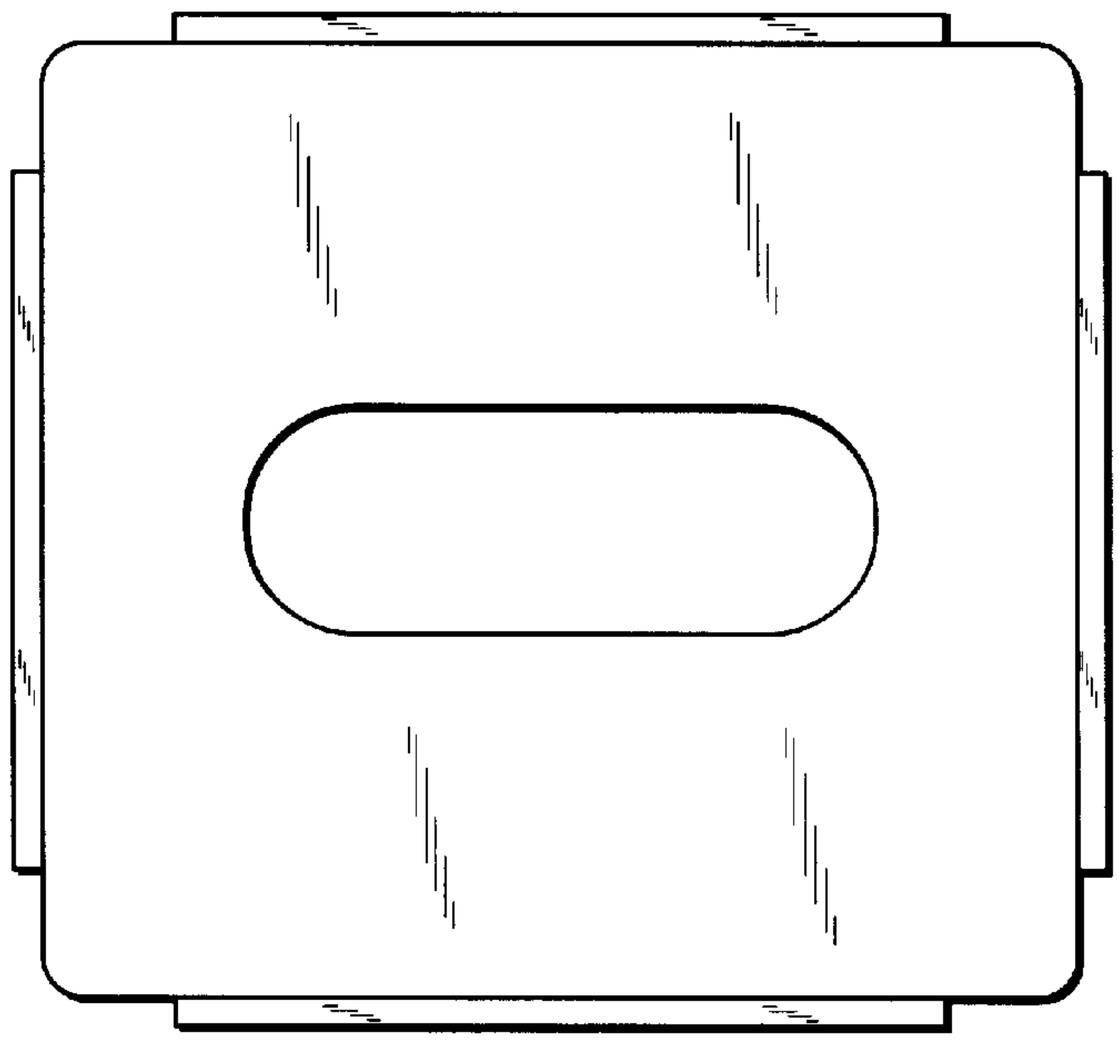

FIG. 5

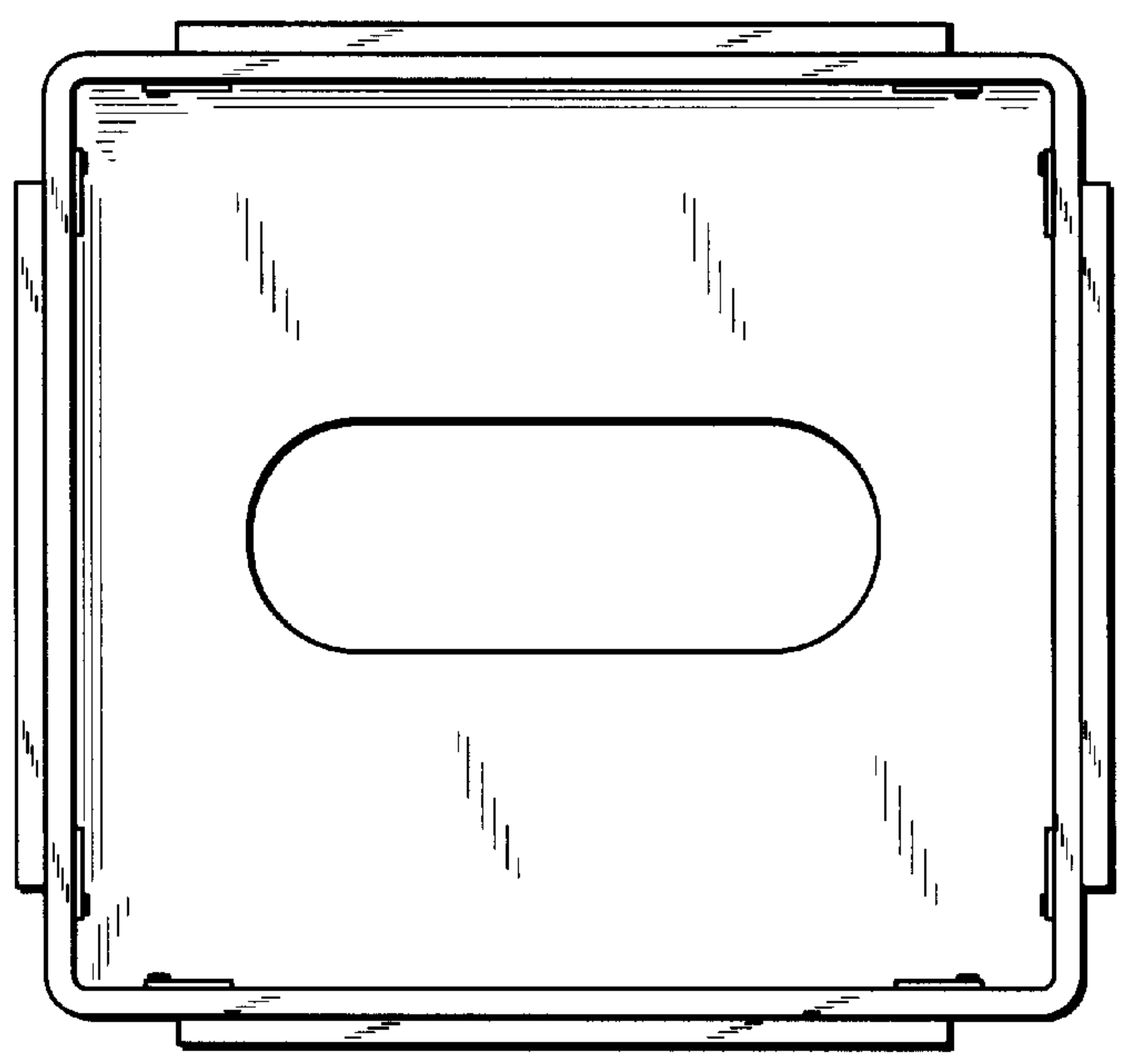

FIG. 6

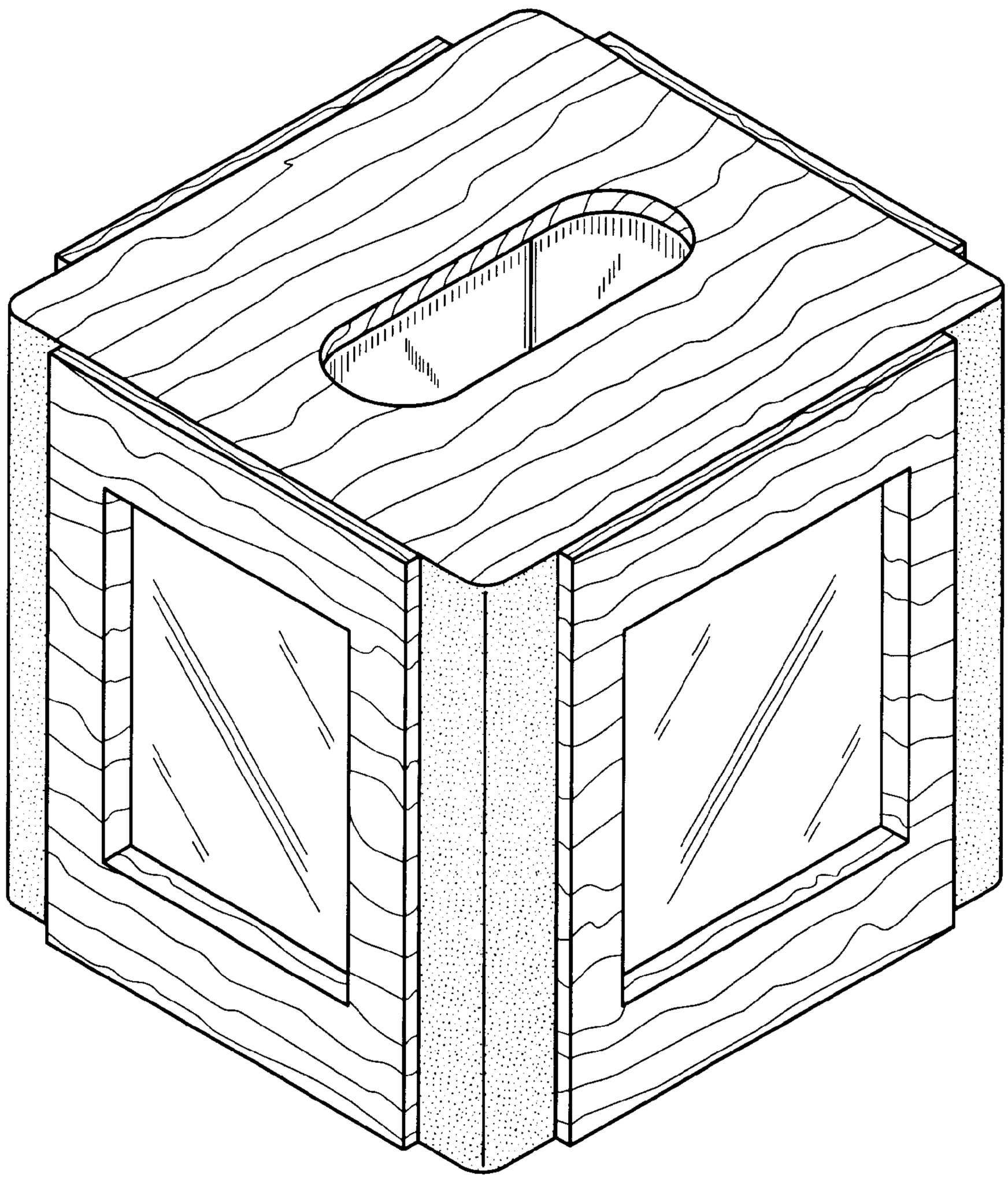

FIG. 8

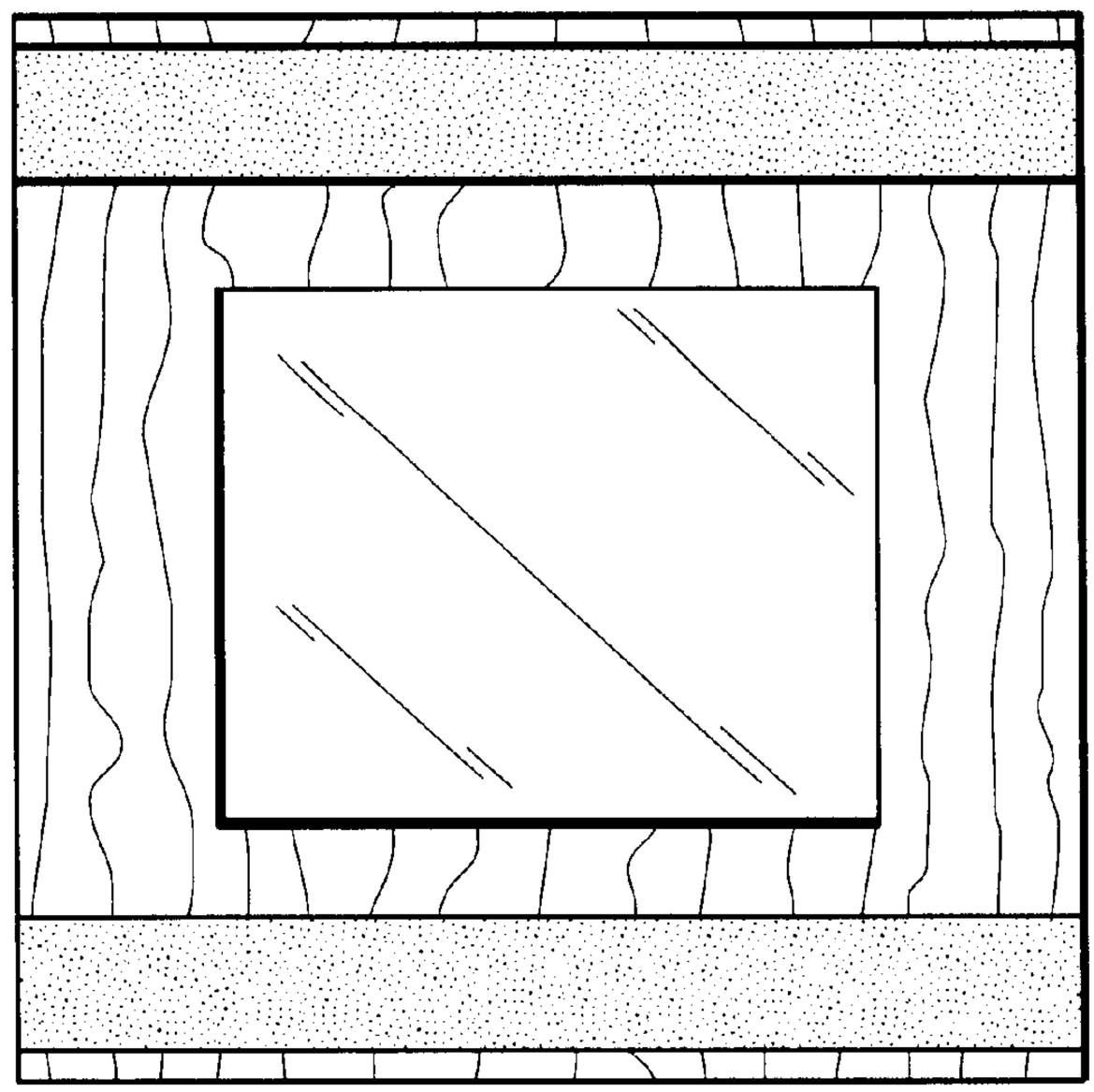

FIG. 7

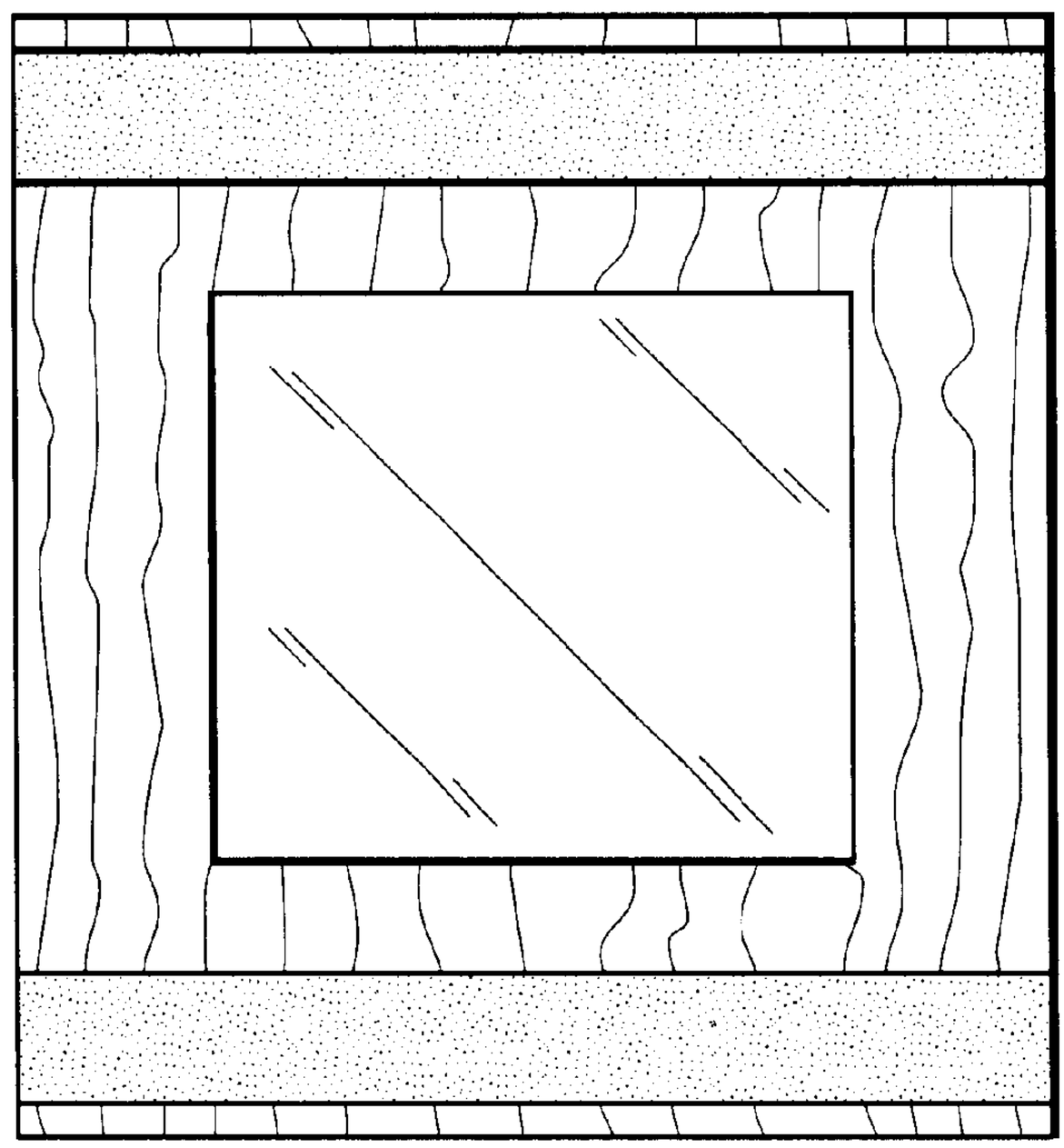

FIG. 9

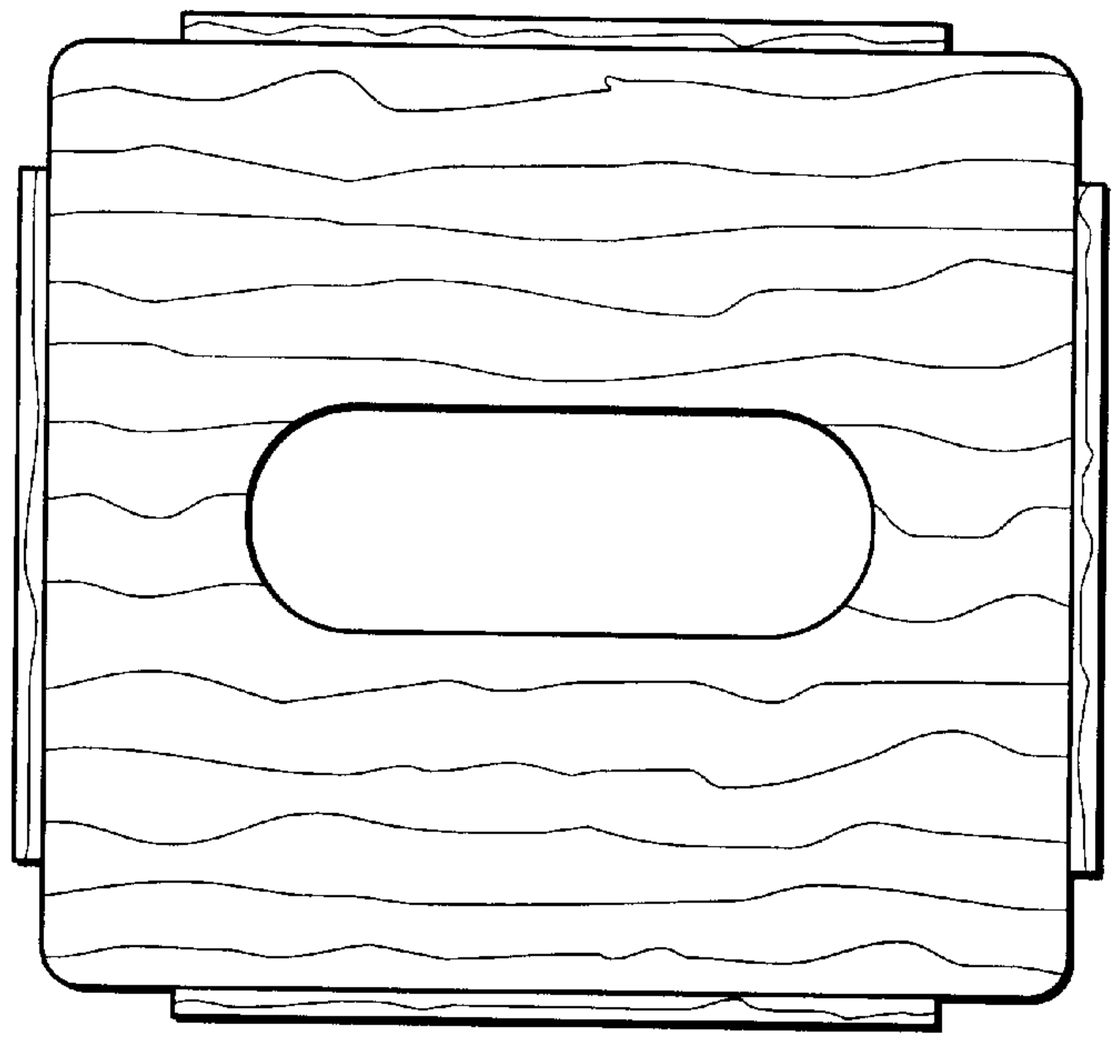

FIG. 10

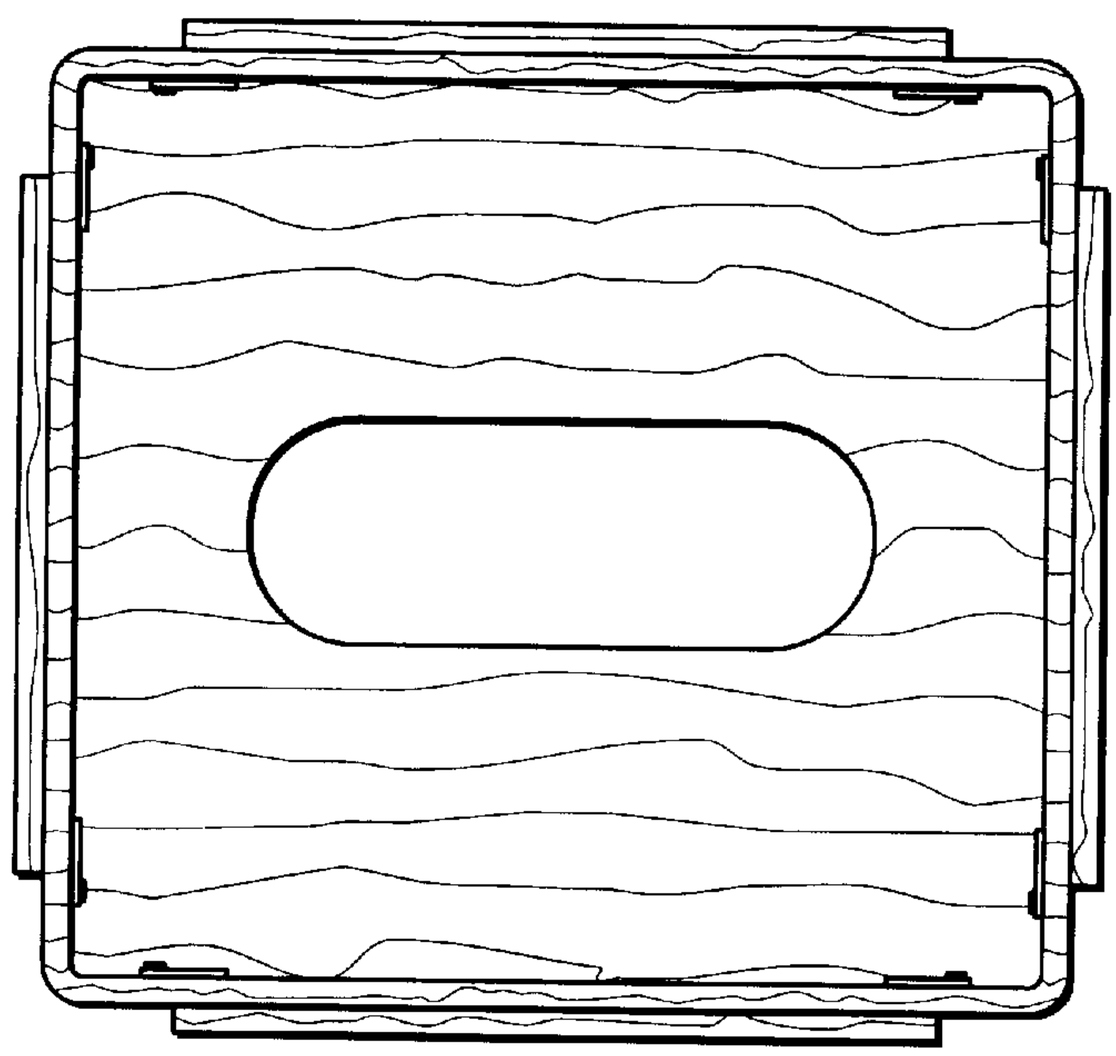

FIG. 11

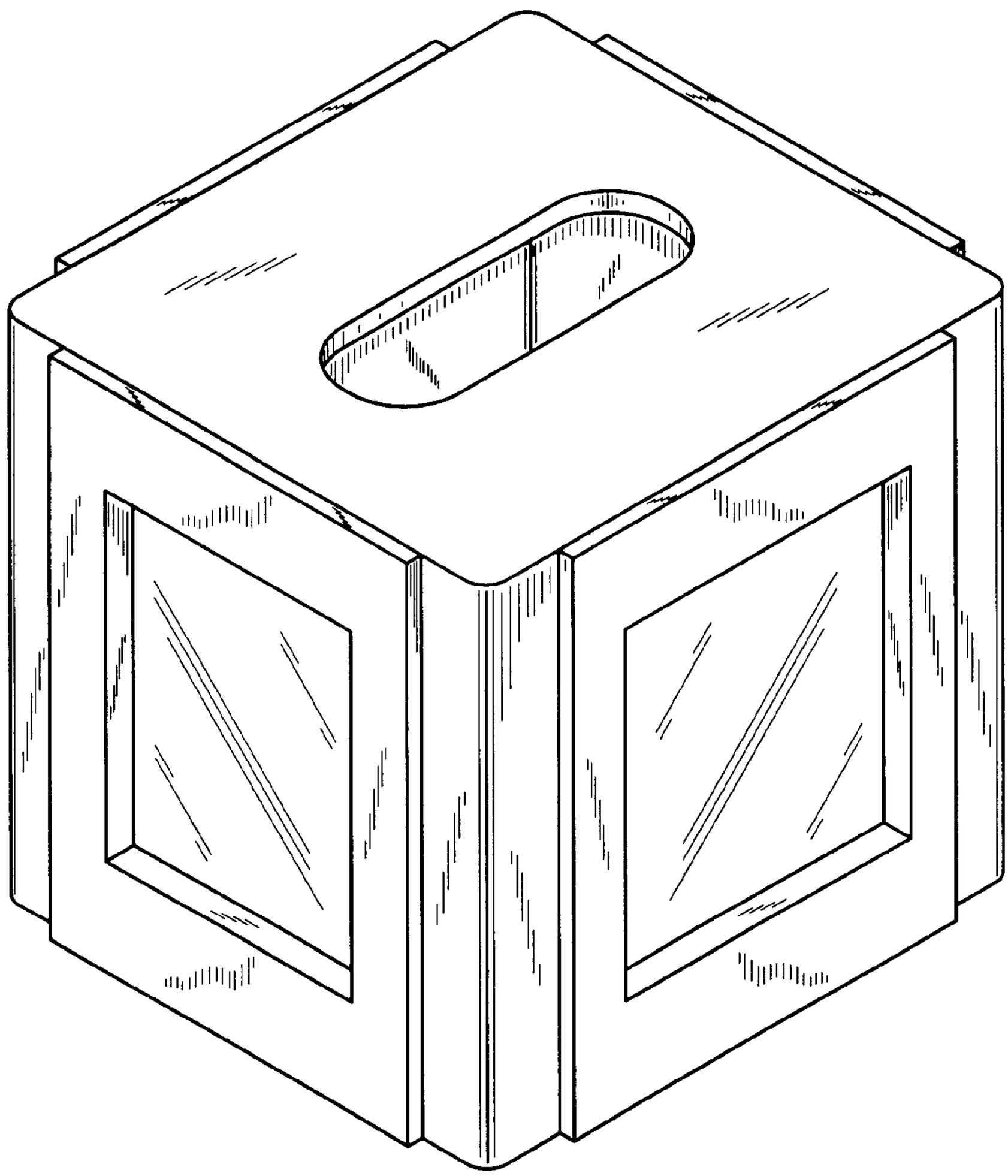

FIG. 13

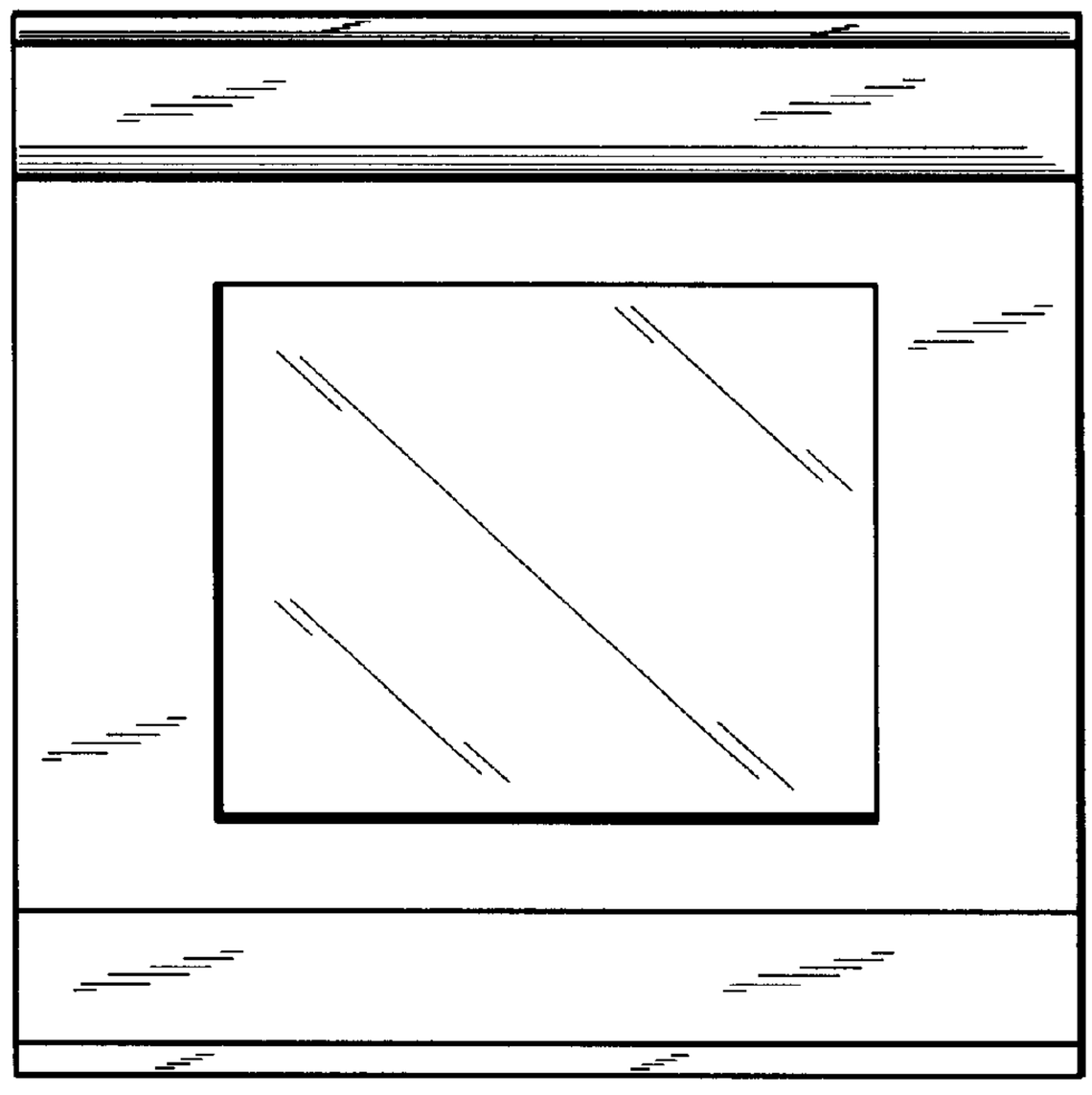

FIG. 12

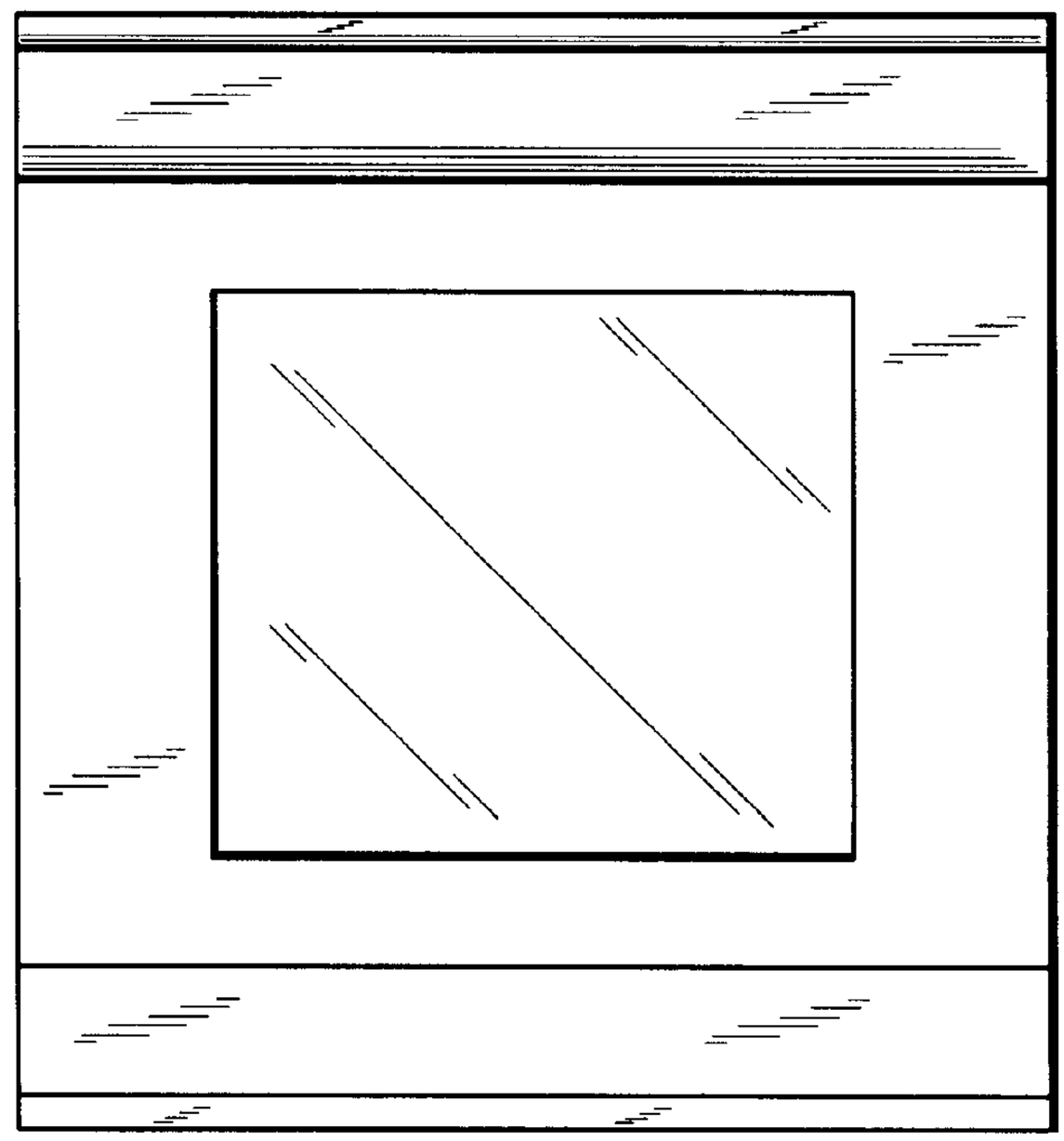

FIG. 14

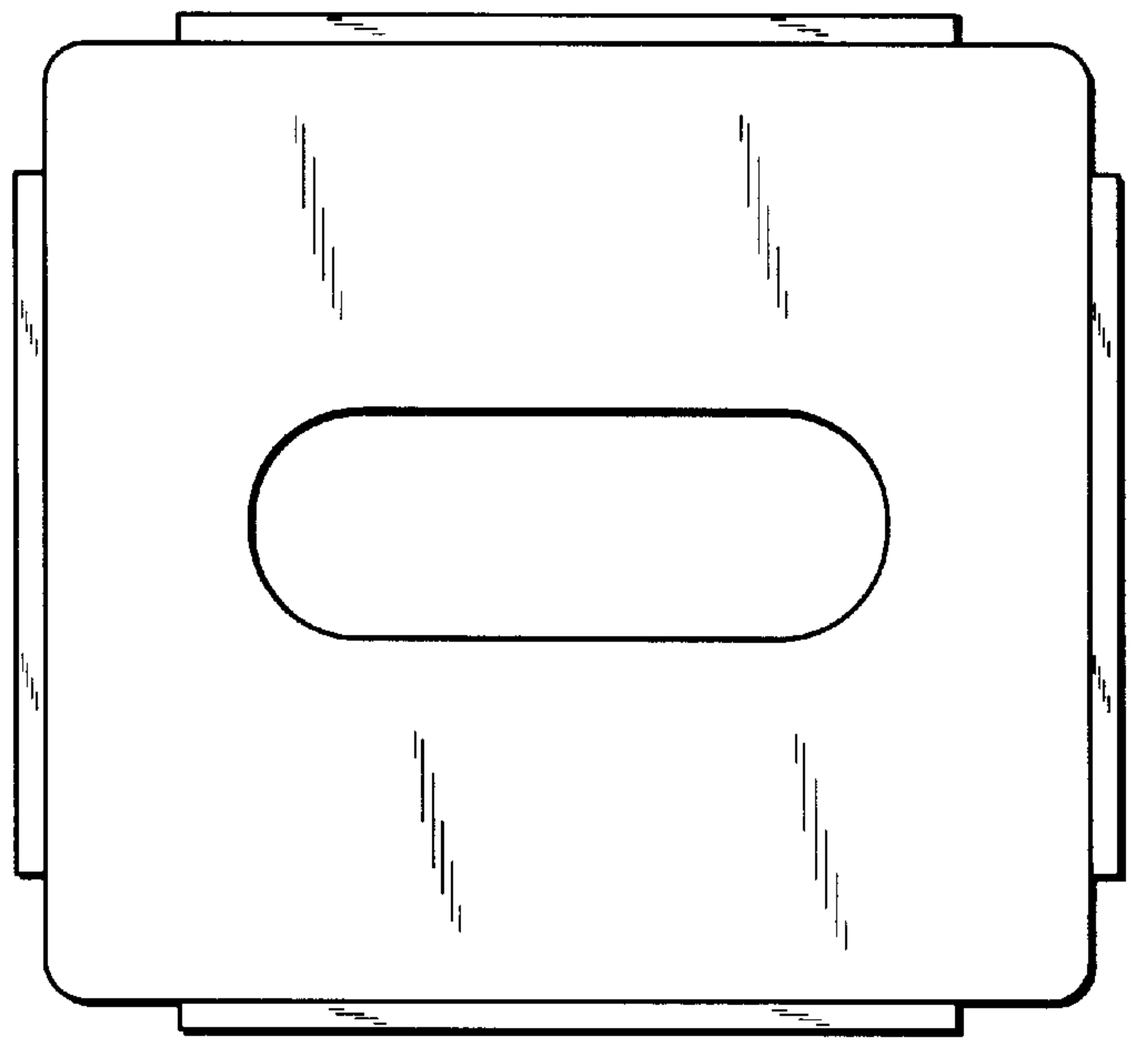
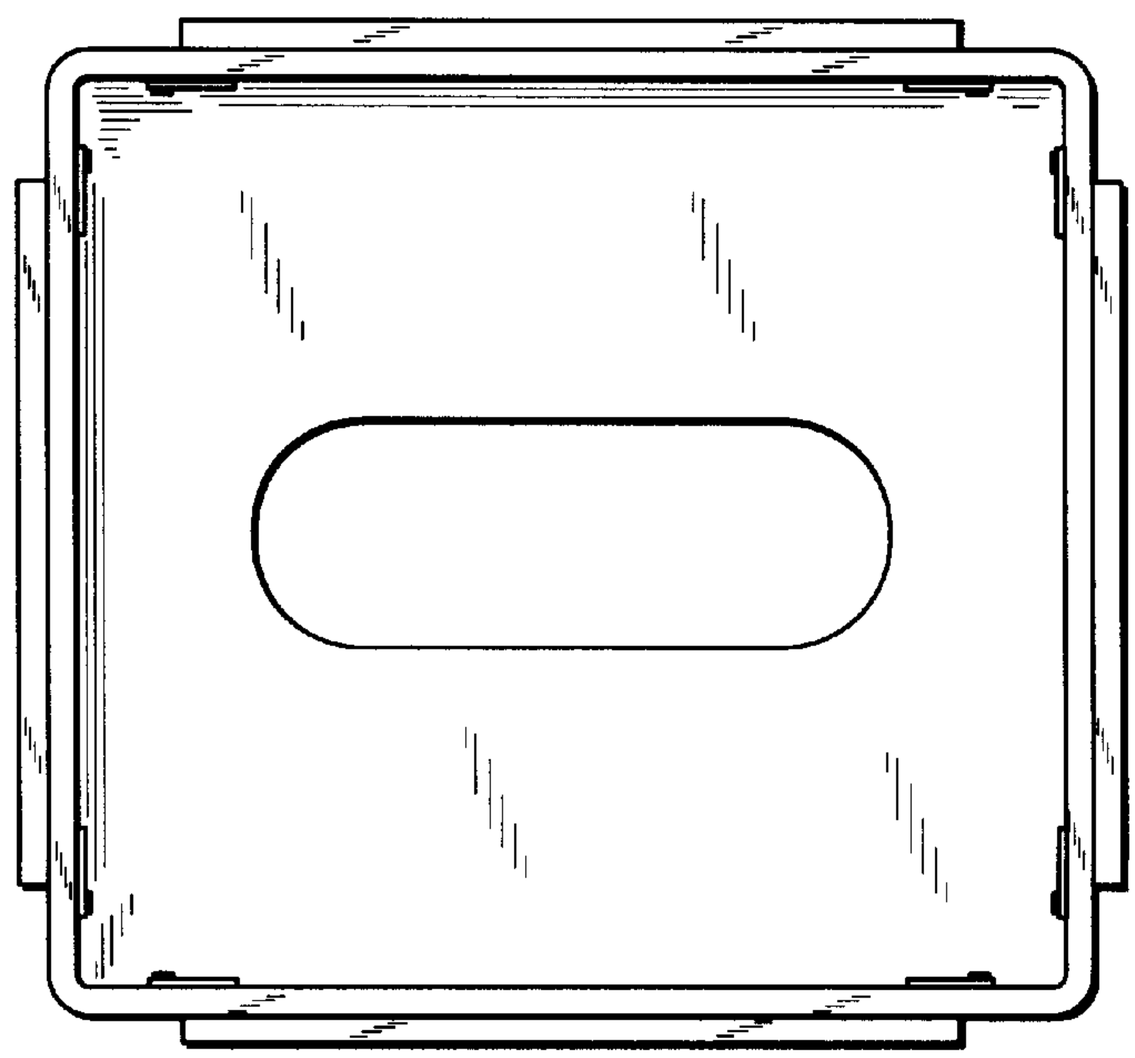
FIG.15