US00D458554S

(12) United States Design Patent

Jolly

(10) Patent No.: US D458,554 S
(45) Date of Patent: ** Jun. 11, 2002

(54) **ADJUSTABLE PRESSURE REGULATOR MODULE WITH VISUAL INDICATOR**

(75) Inventor: **Neil Jolly**, Tucson, AZ (US)

(73) Assignee: **Rain Bird, Corporation**, Glendora, CA (US)

(**) Term: **14 Years**

(21) Appl. No.: **29/138,851**

(22) Filed: **Mar. 19, 2001**

(51) **LOC (7) Cl.** **10-04**
(52) **U.S. Cl.** **D10/96**
(58) **Field of Search** D10/96; 116/277, 116/282, 284; 137/555, 556

(56) **References Cited**

U.S. PATENT DOCUMENTS

4,133,288	A		1/1979	Burgess
4,494,565	A		1/1985	Sinclair et al.
5,054,516	A		10/1991	Okerblom
5,469,805	A		11/1995	Gibbs
5,535,698	A		7/1996	Trevisan
5,538,037	A		7/1996	Pizao
5,609,185	A		3/1997	Booth et al.
6,041,815	A	*	3/2000	Nichols 137/556
6,044,791	A	*	4/2000	LaMarca et al. 116/277

* cited by examiner

Primary Examiner—Antoine Duval Davis
(74) *Attorney, Agent, or Firm*—Kelly Bauersfeld Lowry & Kelley, LLP

(57) **CLAIM**

The ornamental design for an adjustable pressure regulator module with visual indicator, as shown and described.

DESCRIPTION

FIG. **1** is a front elevational view of an adjustable pressure regulator module with visual indicator embodying my new design, and shown with an optional regulator module cover attached thereto. Also shown in broken line in FIG. **1** is a representation of a valve solenoid housing to which the module is adapted to be attached, the housing forming no part of the present invention;

FIG. **2** is an enlarged rear perspective view of the adjustable pressure regulator module with visual indicator of FIG. **1**, and shown with the optional regulator module cover separated therefrom;

FIG. **3** is a front elevational view of the module of FIG. **2** shown without the optional regulator cover;

FIG. **4** is a rear elevational view of the module of FIG. **2** shown with out the optional regulator cover;

FIG. **5** is a right side elevational view of the module of FIG. **3**;

FIG. **6** is a left side elevational view of the module of FIG. **3**;

FIG. **7** is a top plan view of the module of FIG. **3**;

FIG. **8** is a bottom plan view of the module of FIG. **3**;

FIG. **9** is an enlarged rear perspective view of the adjustable pressure regulator module with visual indicator of FIG. **1**, and shown with the optional regulator module cover attached thereto;

FIG. **10** is a front elevational view of the module of FIG. **9**;

FIG. **11** is a rear elevational view of the module of FIG. **9**;

FIG. **12** is a right side elevational view of the module of FIG. **9**;

FIG. **13** is a left side elevational view of the module of FIG. **9**;

FIG. **14** is a top plan view of the module of FIG. **9**; and,

FIG. **15** is a bottom plan view of the module of FIG. **9**.

1 Claim, 8 Drawing Sheets

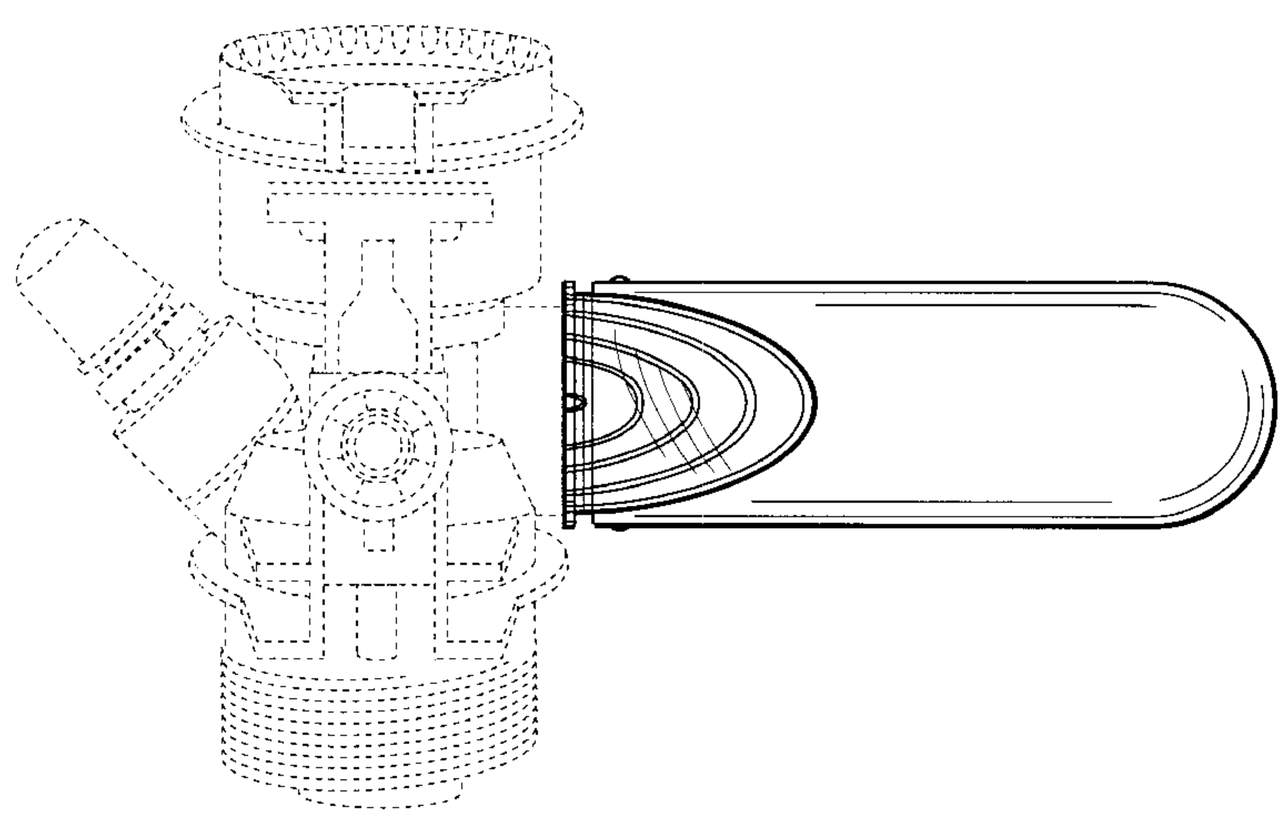

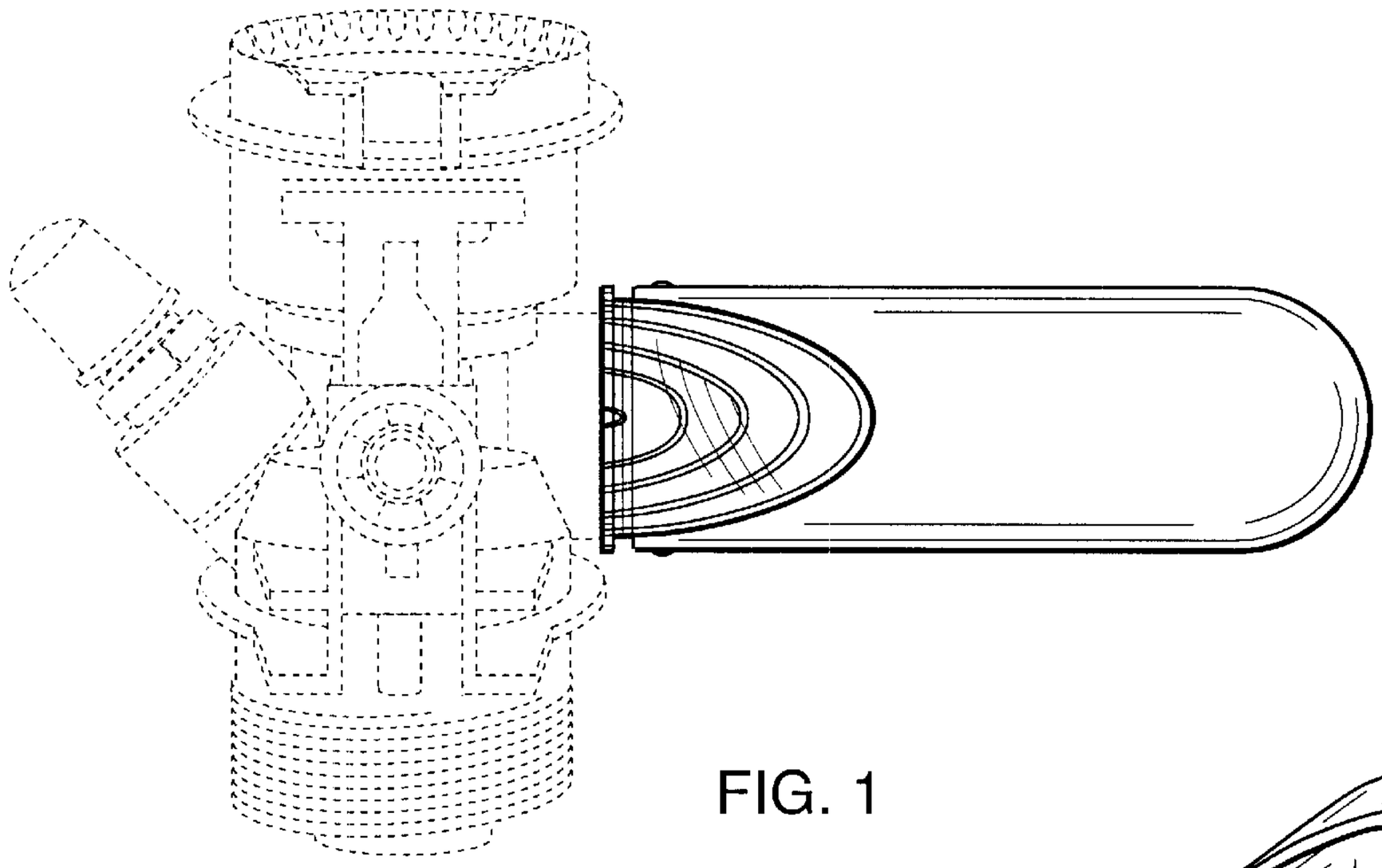

FIG. 1

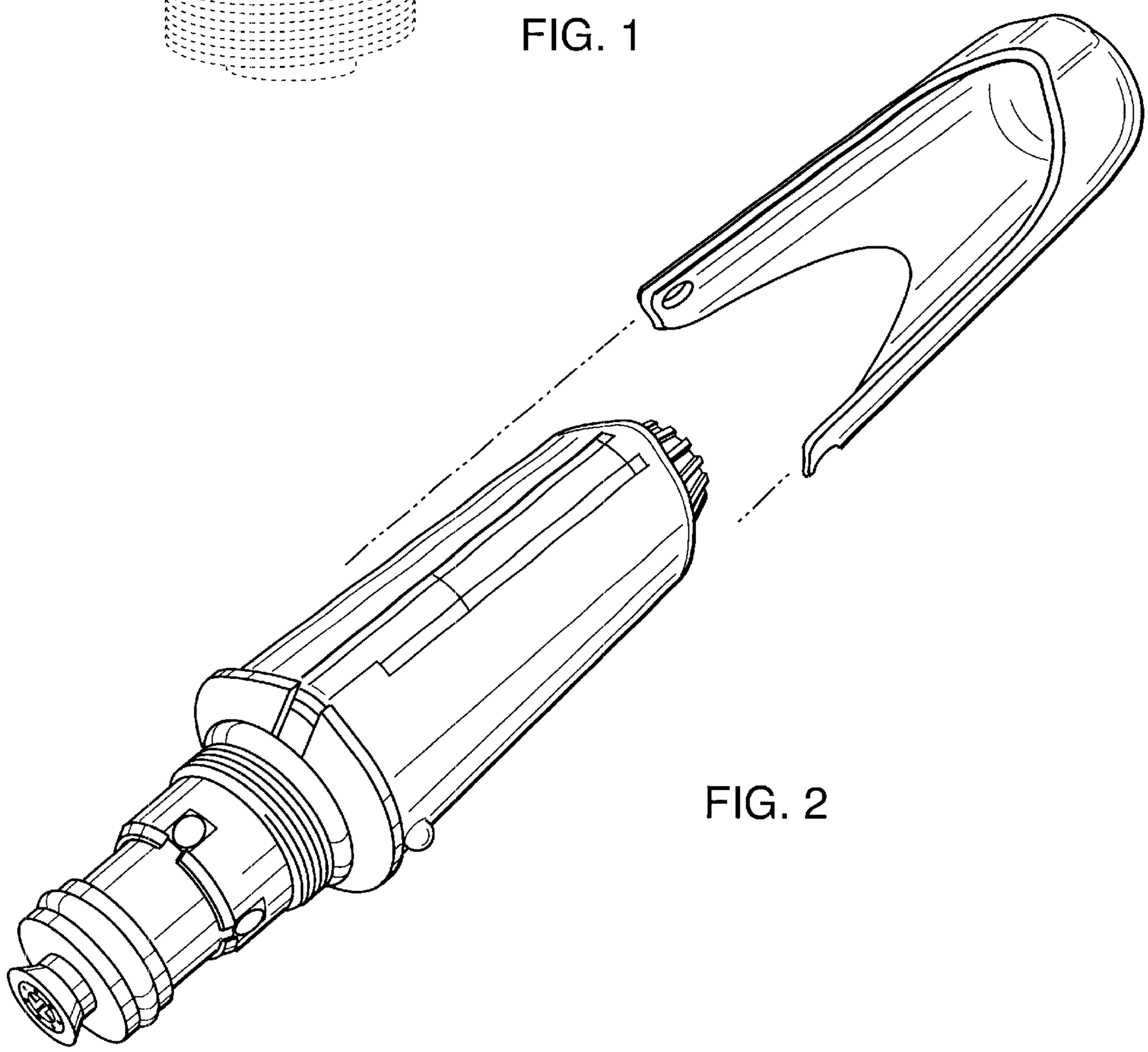

FIG. 2

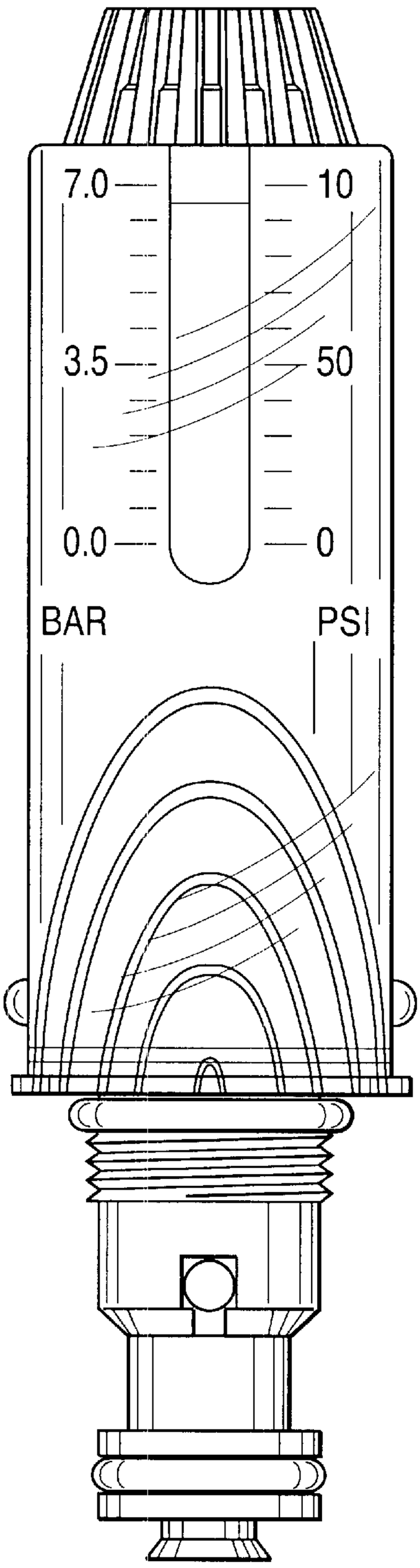

FIG. 3

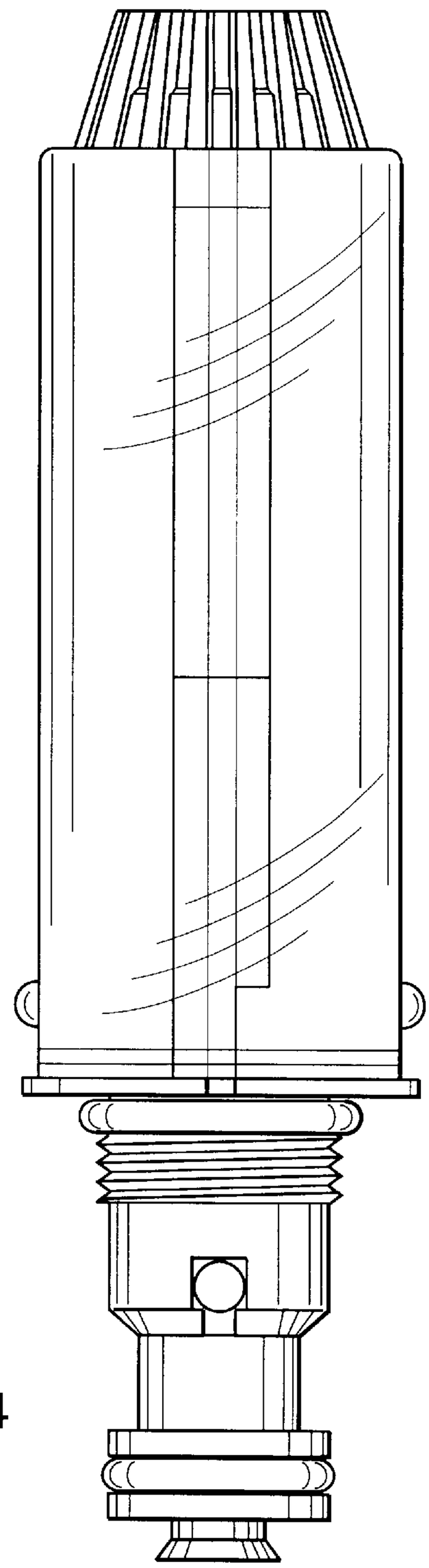

FIG. 4

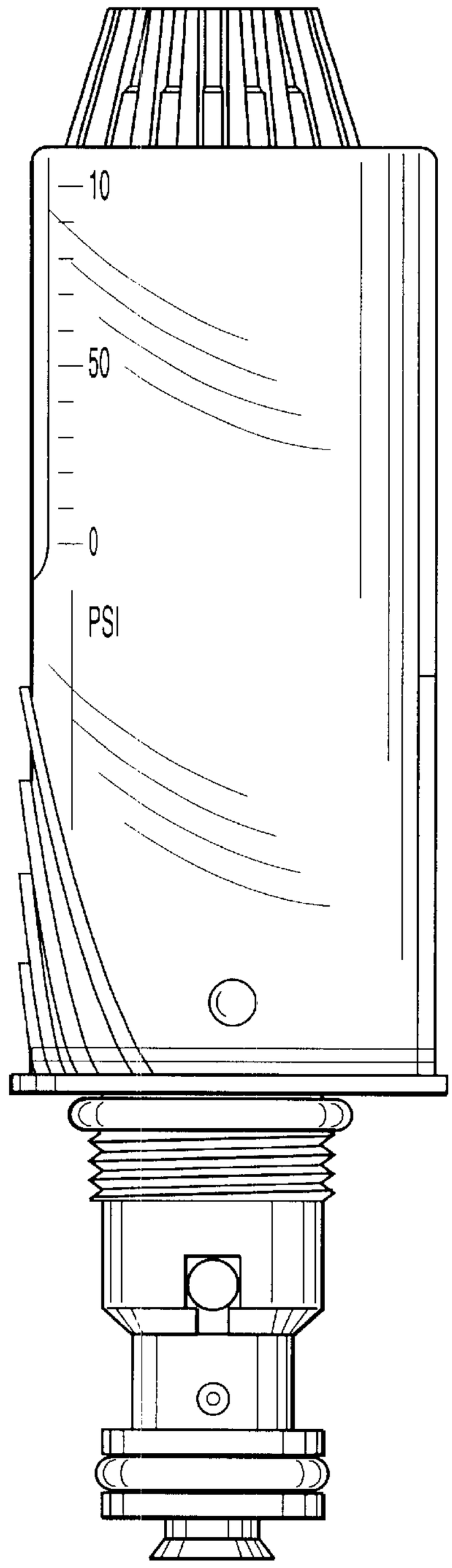

FIG. 5

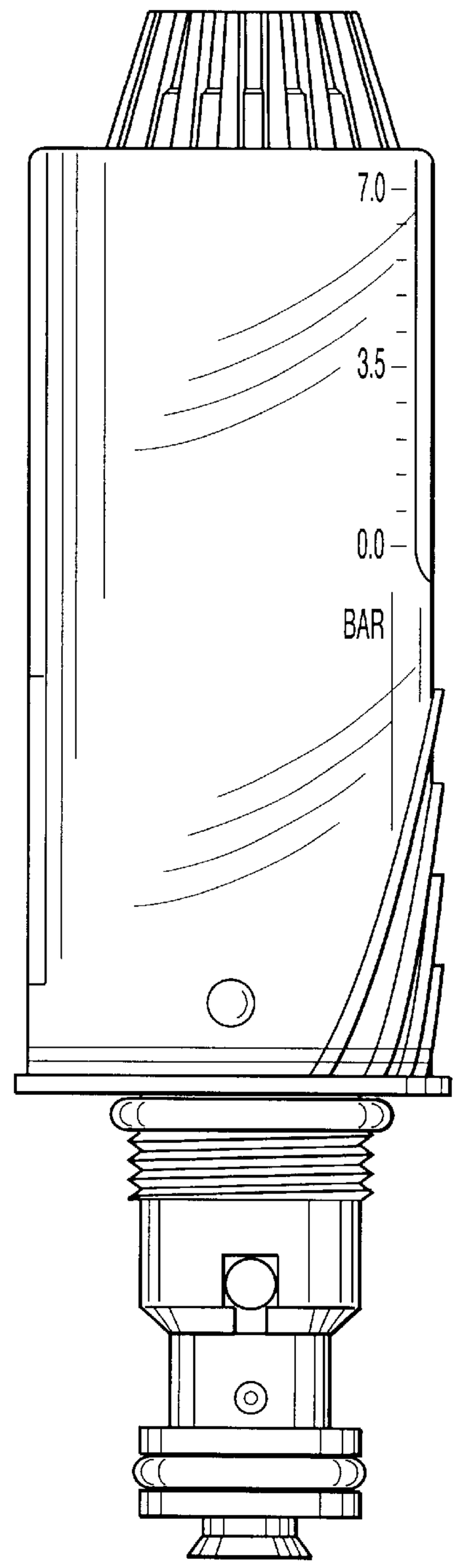

FIG. 6

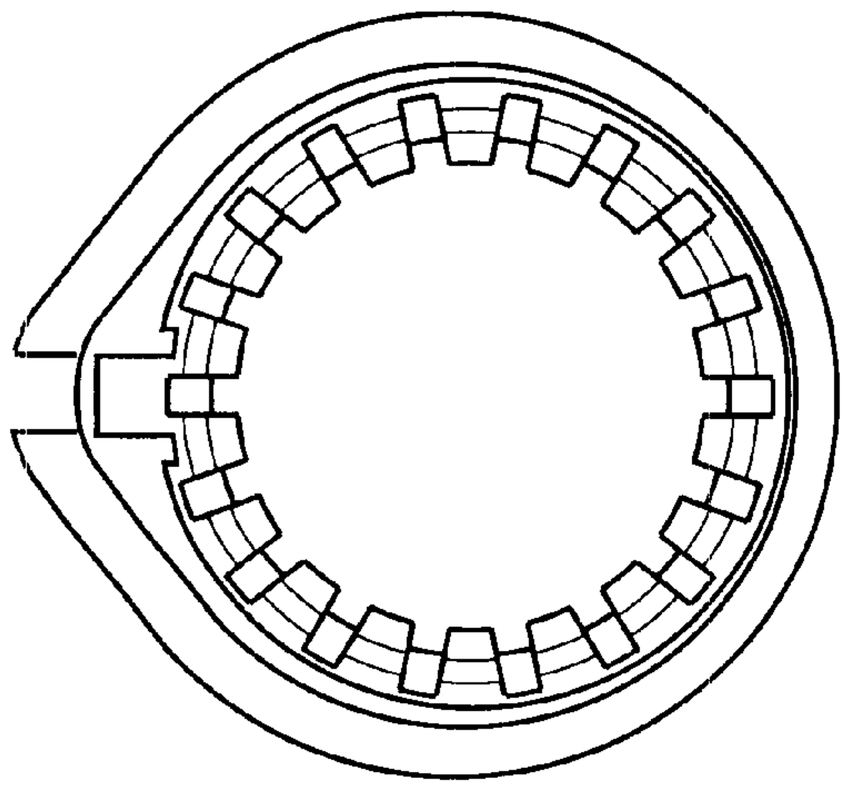

FIG. 7

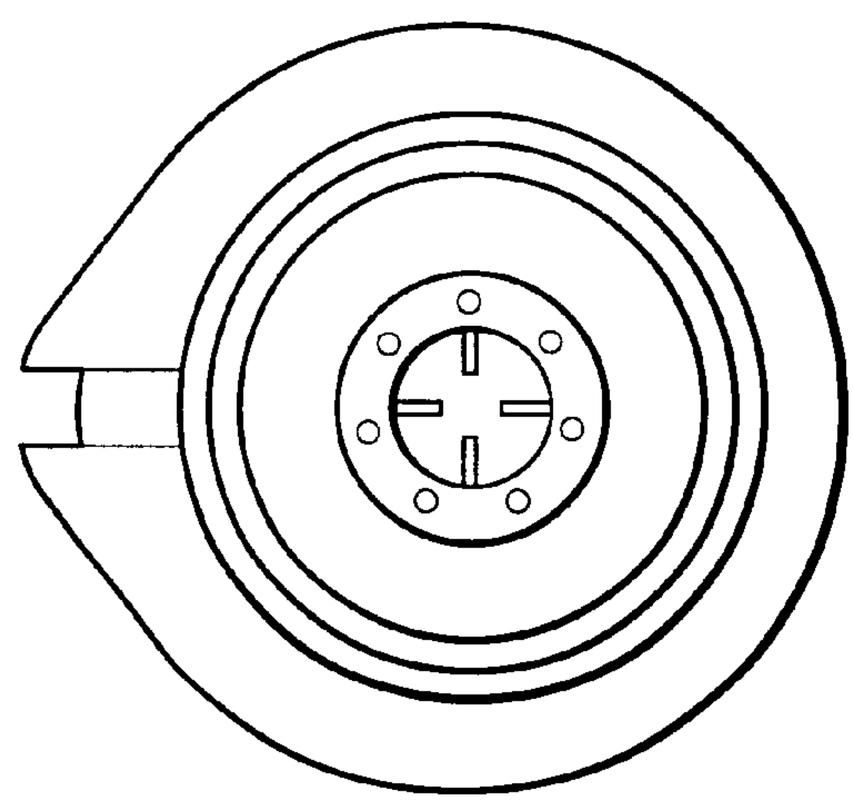

FIG. 8

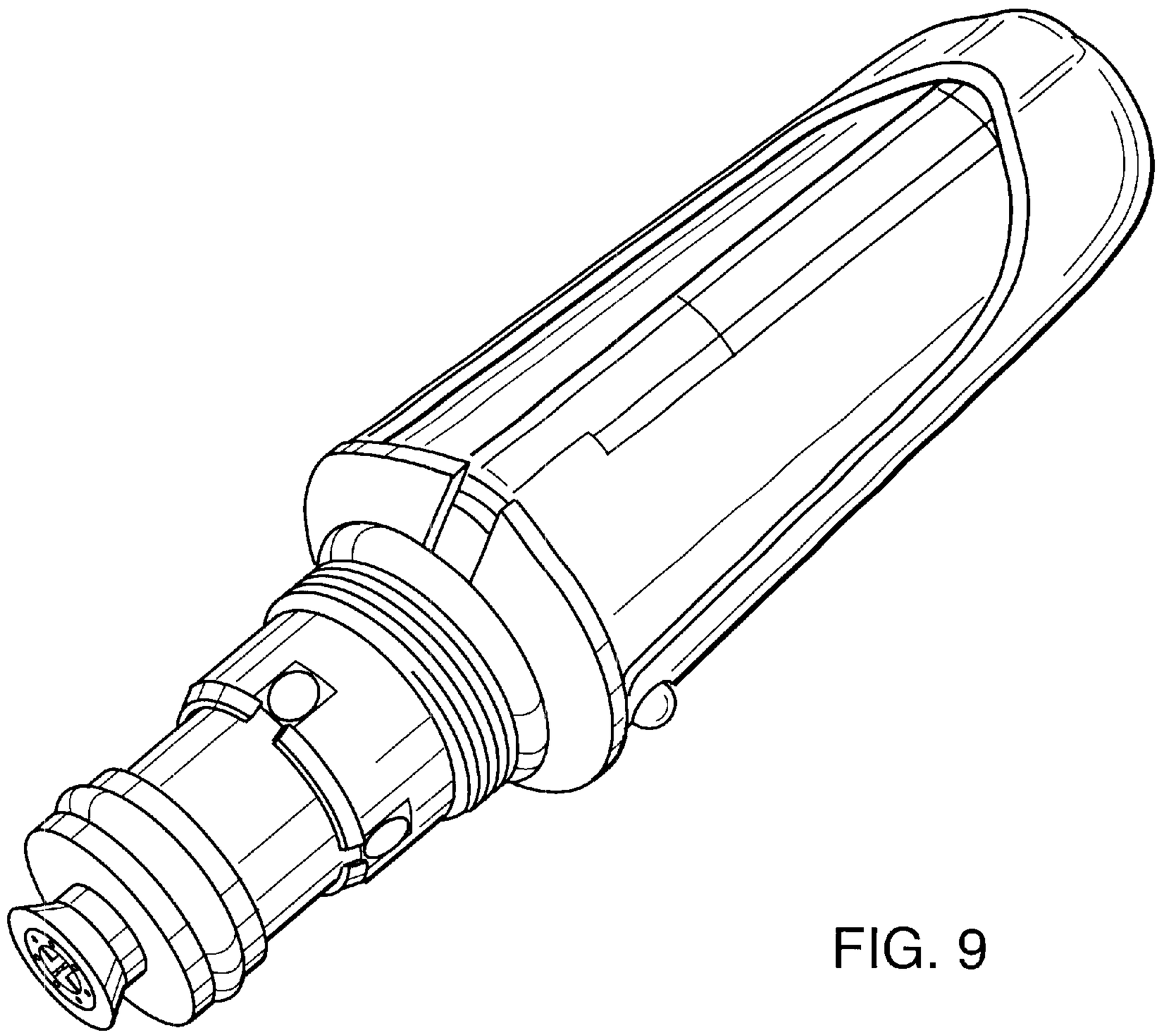

FIG. 9

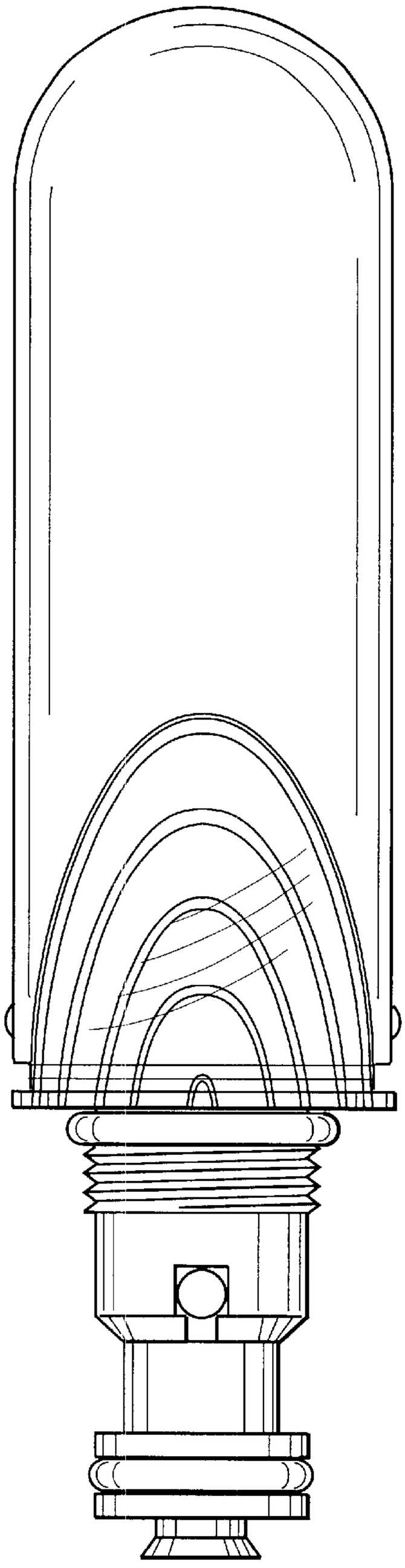

FIG. 10

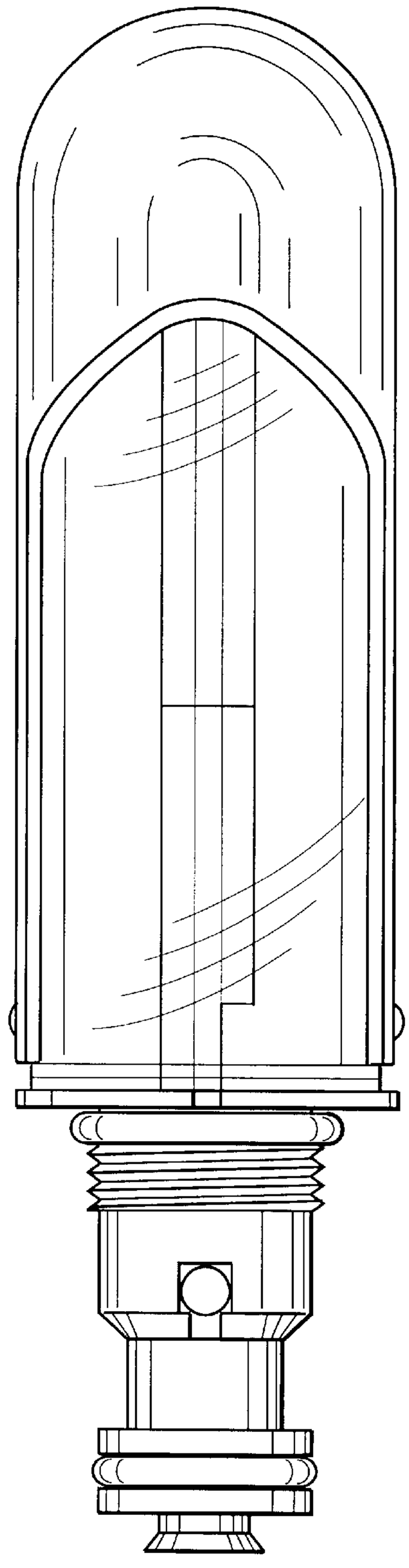

FIG. 11

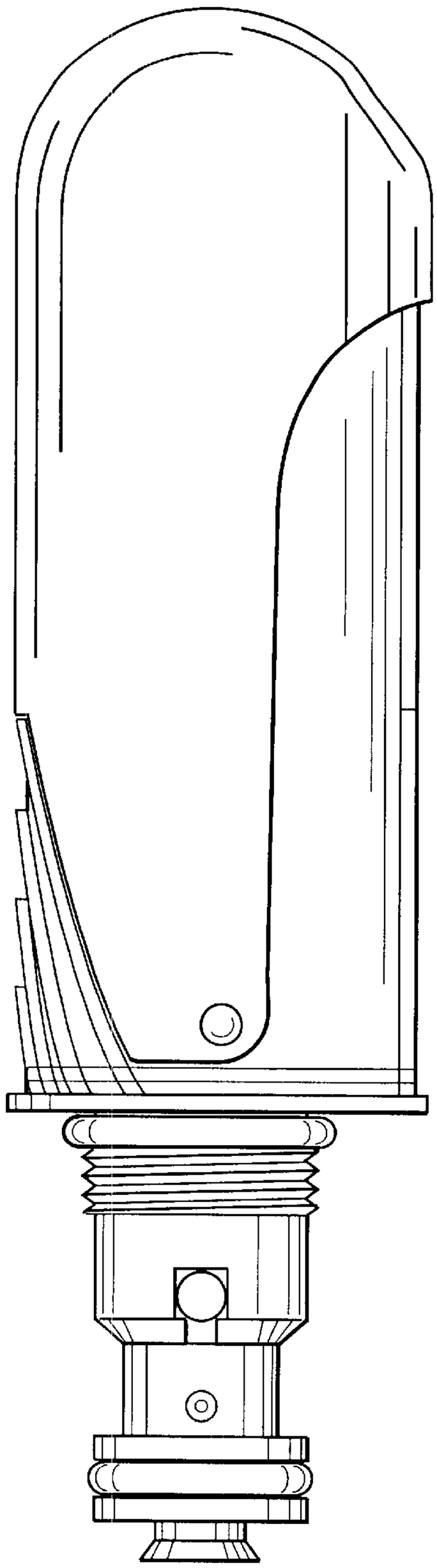

FIG. 12

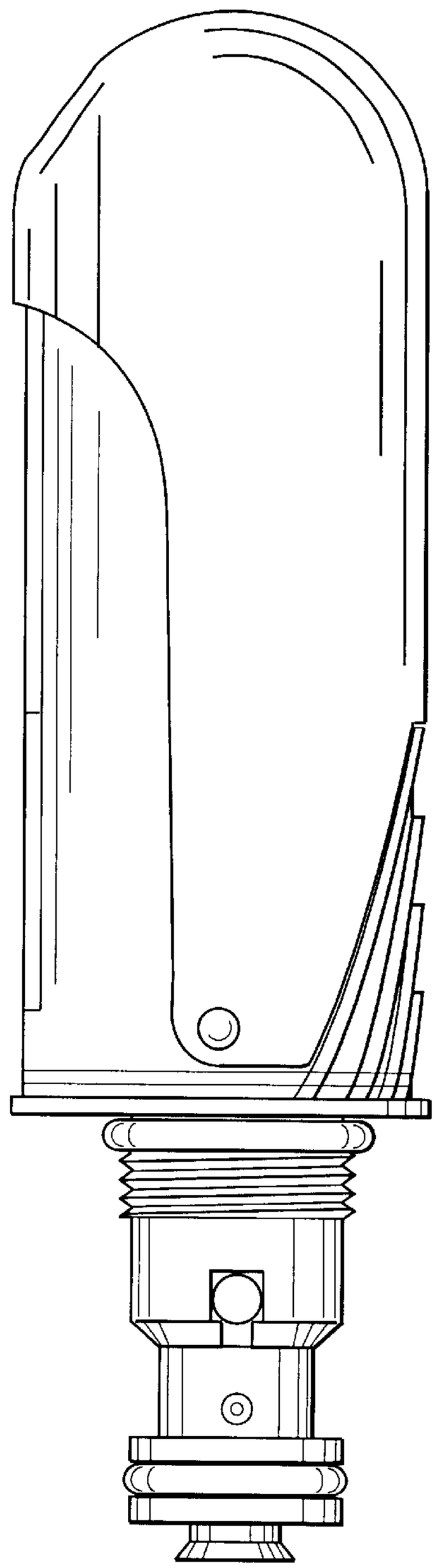

FIG. 13

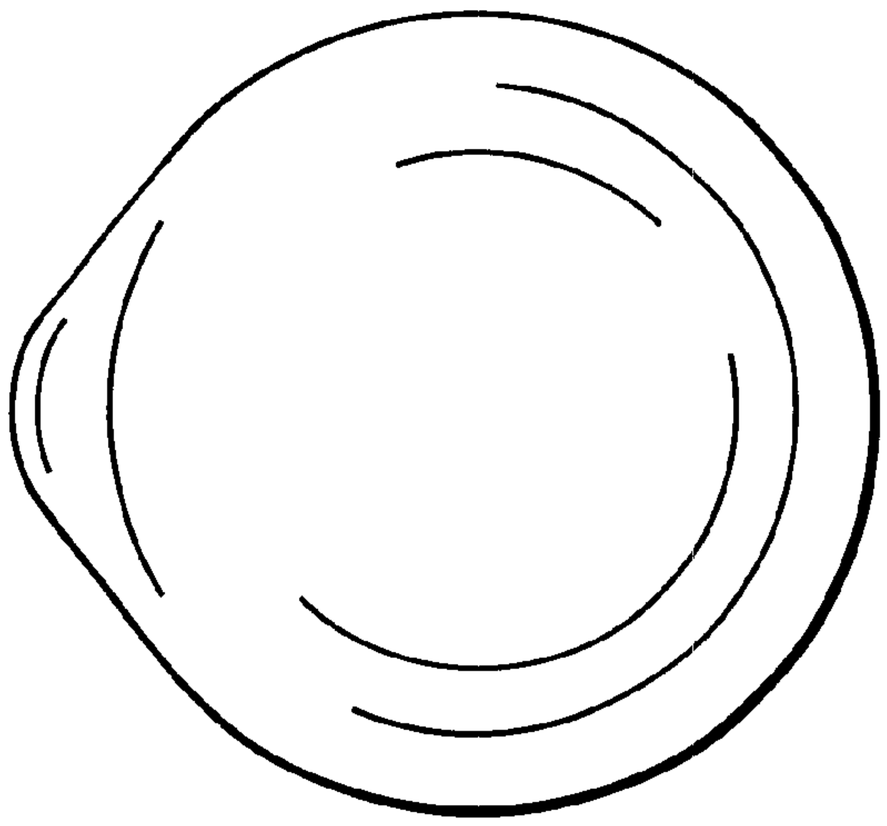

FIG. 14

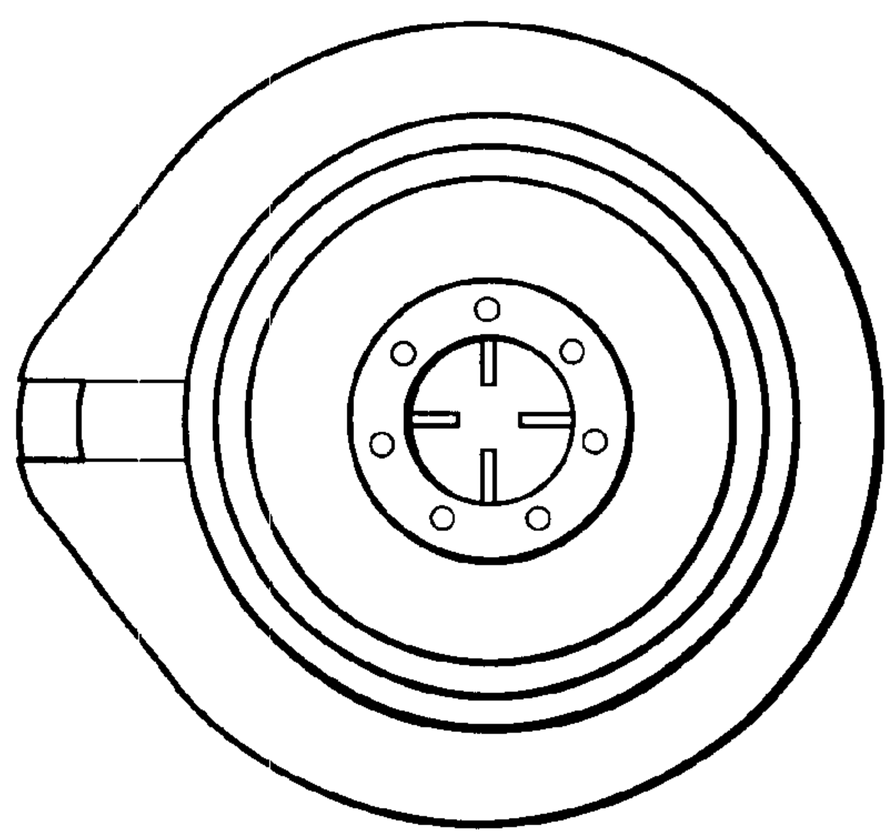

FIG. 15