US00D455723S

(12) United States Design Patent

Vackar

(10) Patent No.: US D455,723 S
(45) Date of Patent: ** Apr. 16, 2002

(54) **CONFIGURATION OF MULTIPLE ELECTRONIC ENCLOSURES**

(75) Inventor: **Mark A Vackar**, Houston, TX (US)

(73) Assignee: **Toshiba International Corporation**, Houston, TX (US)

(**) Term: **14 Years**

(21) Appl. No.: **29/136,651**

(22) Filed: **Feb. 6, 2001**

(51) **LOC (7) Cl.** **13-03**
(52) **U.S. Cl.** **D13/184**
(58) **Field of Search** D13/164, 177, D13/184; D14/348, 349, 352, 353, 354, 355, 356; 312/223.1, 223.2; 361/600, 622, 679, 724

(56) **References Cited**

U.S. PATENT DOCUMENTS

D277,283 S	*	1/1985	Empson et al.	D14/100
D301,137 S	*	5/1989	Treptow et al.	D14/107
D301,470 S	*	6/1989	Preussner	D14/100
D314,947 S	*	2/1991	Imamura	D14/100
D340,031 S	*	10/1993	Hill	D13/162.1
D341,570 S	*	11/1993	Brandt et al.	D14/100
D346,370 S	*	4/1994	Hetfield et al.	D14/107
D357,905 S	*	5/1995	Kimbrough	D14/100
D396,690 S	*	8/1998	Fryers	D13/147
D408,796 S	*	4/1999	Georgopulos	D14/100

* cited by examiner

Primary Examiner—Ted Shooman
Assistant Examiner—Selina Sikder
(74) *Attorney, Agent, or Firm*—Banner & Witcoff, Ltd.

(57) **CLAIM**

The ornamental design for a configuration of multiple electronic enclosures, as shown and described.

DESCRIPTION

FIG. **1** is a perspective view of a configuration of multiple electronic enclosures showing my new design;
FIG. **2** is a front elevational view thereof, the rear elevational view being a mirror image thereof; and,
FIG. **3** is a side elevational view thereof, the left and right sides being mirror images of one another.
No claim is made to the bottom plan view. The broken line showing of various features is for illustrative purposes only and forms no part of the claimed design.

1 Claim, 3 Drawing Sheets

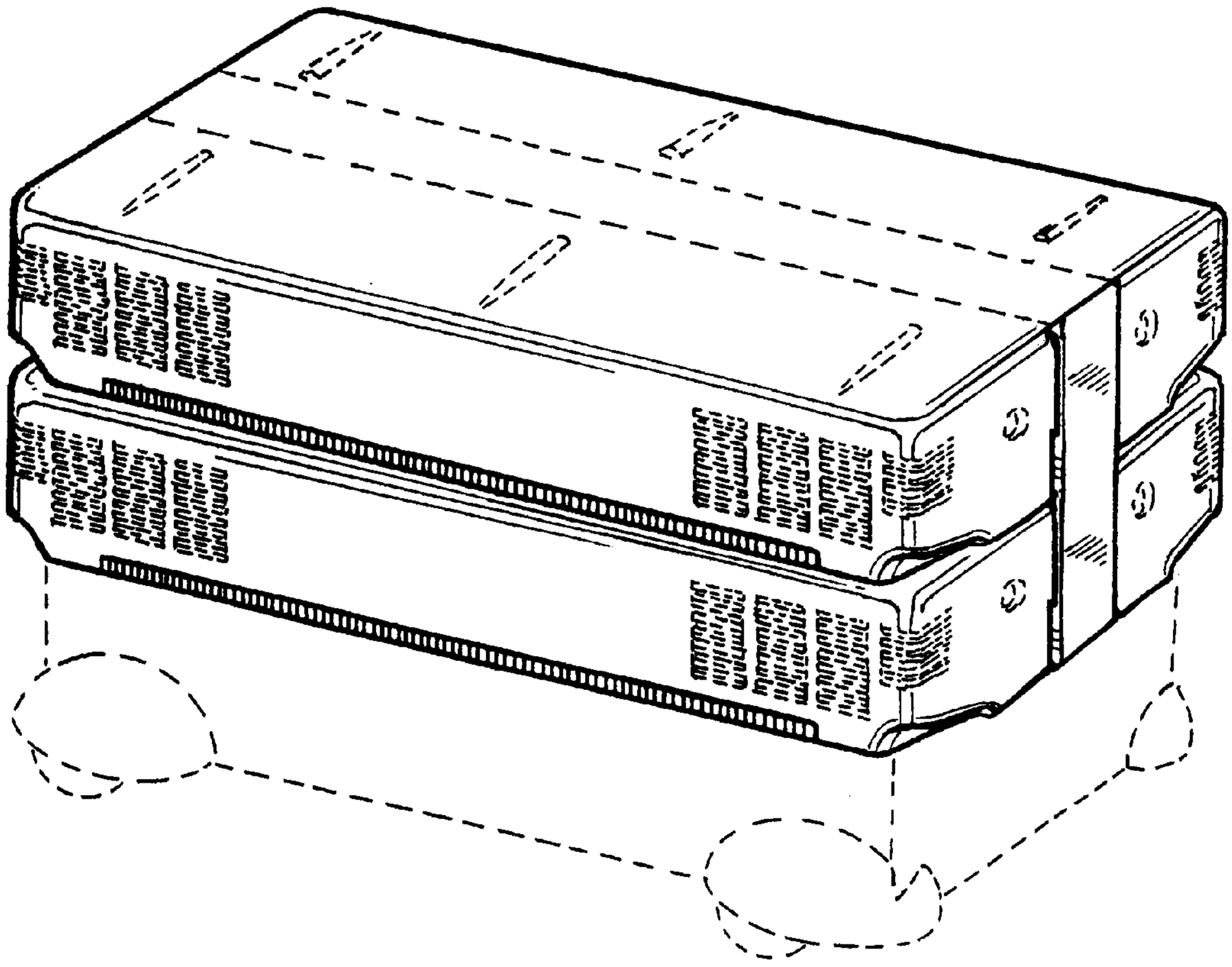

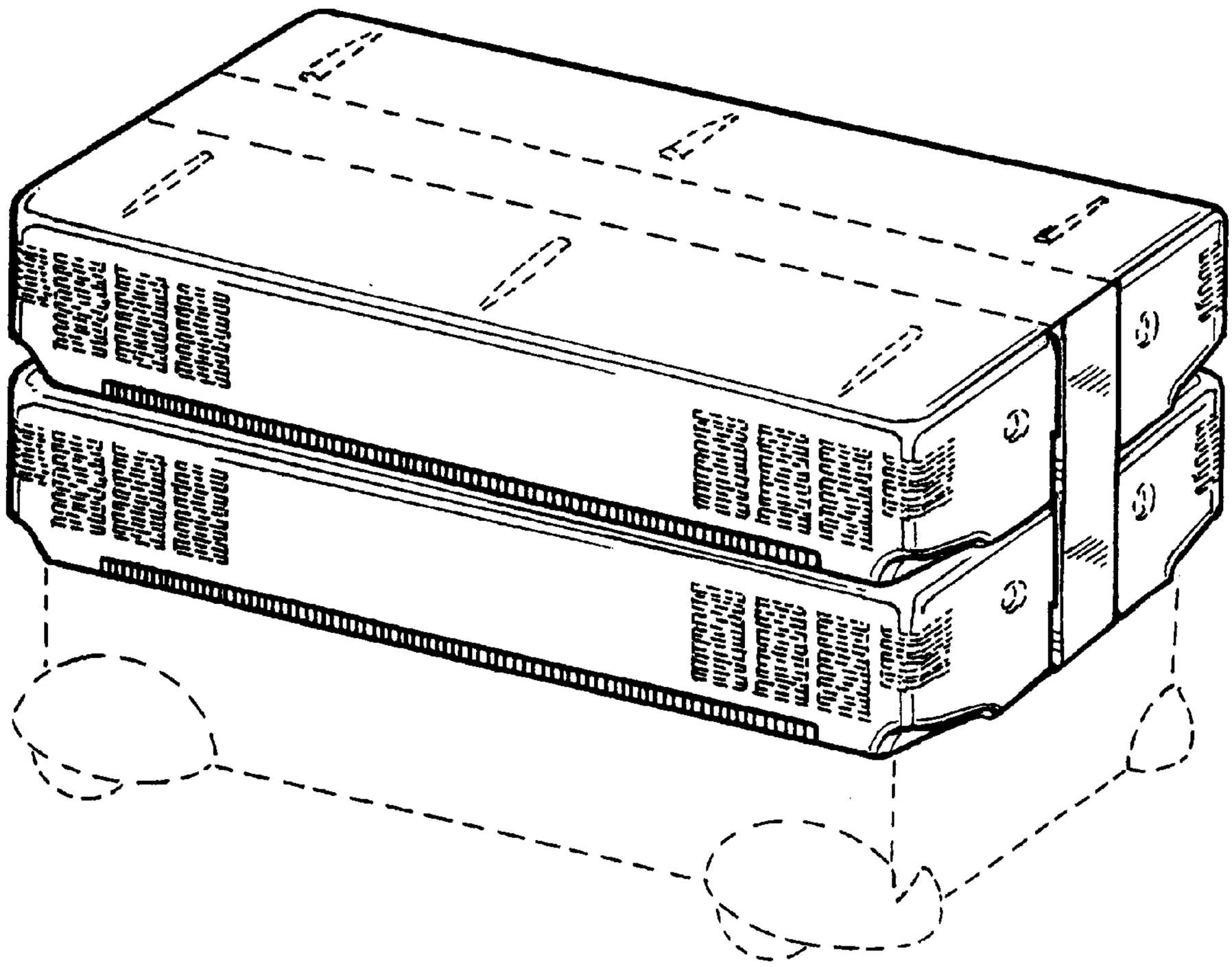

FIG.1

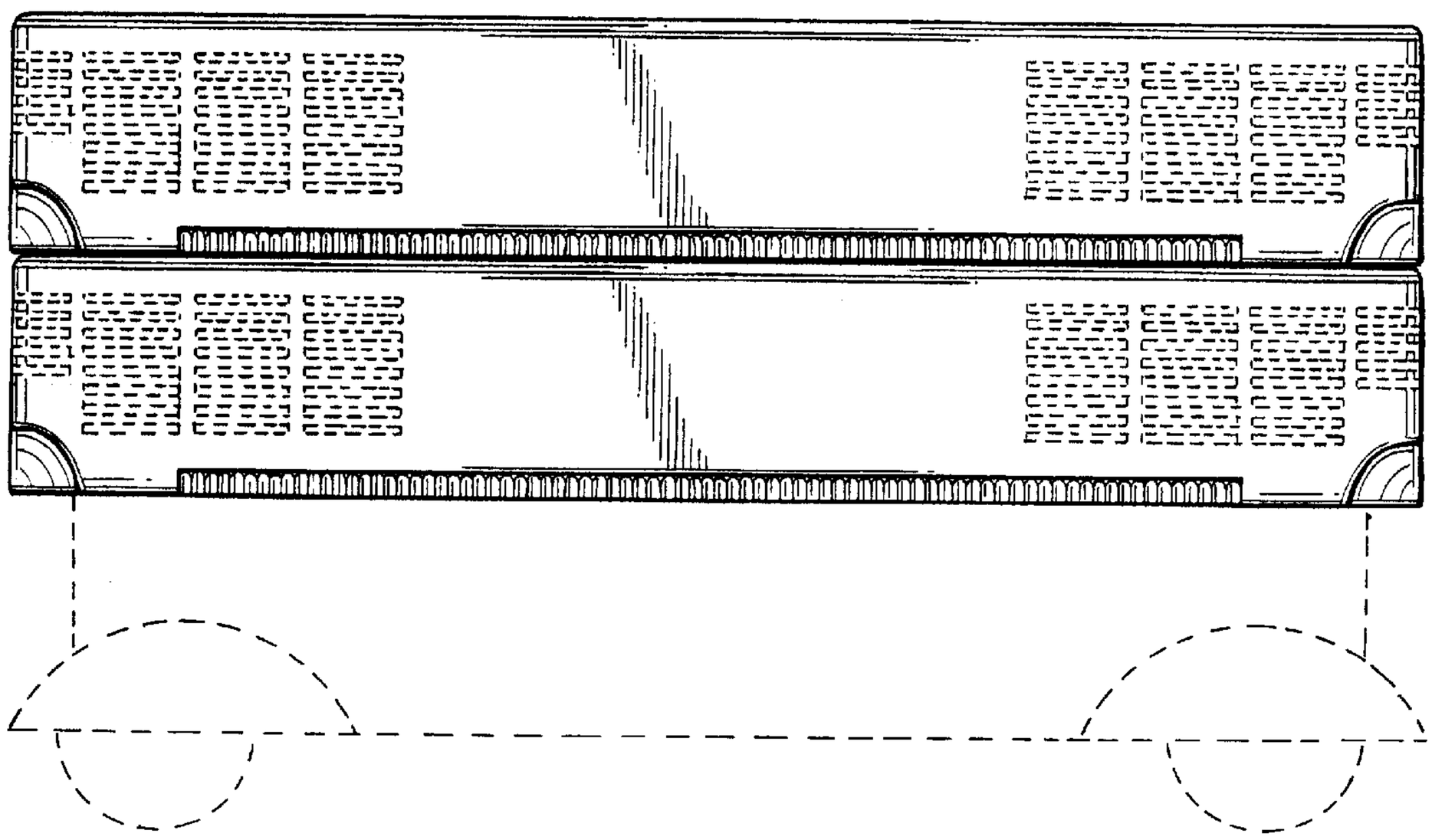

FIG.2

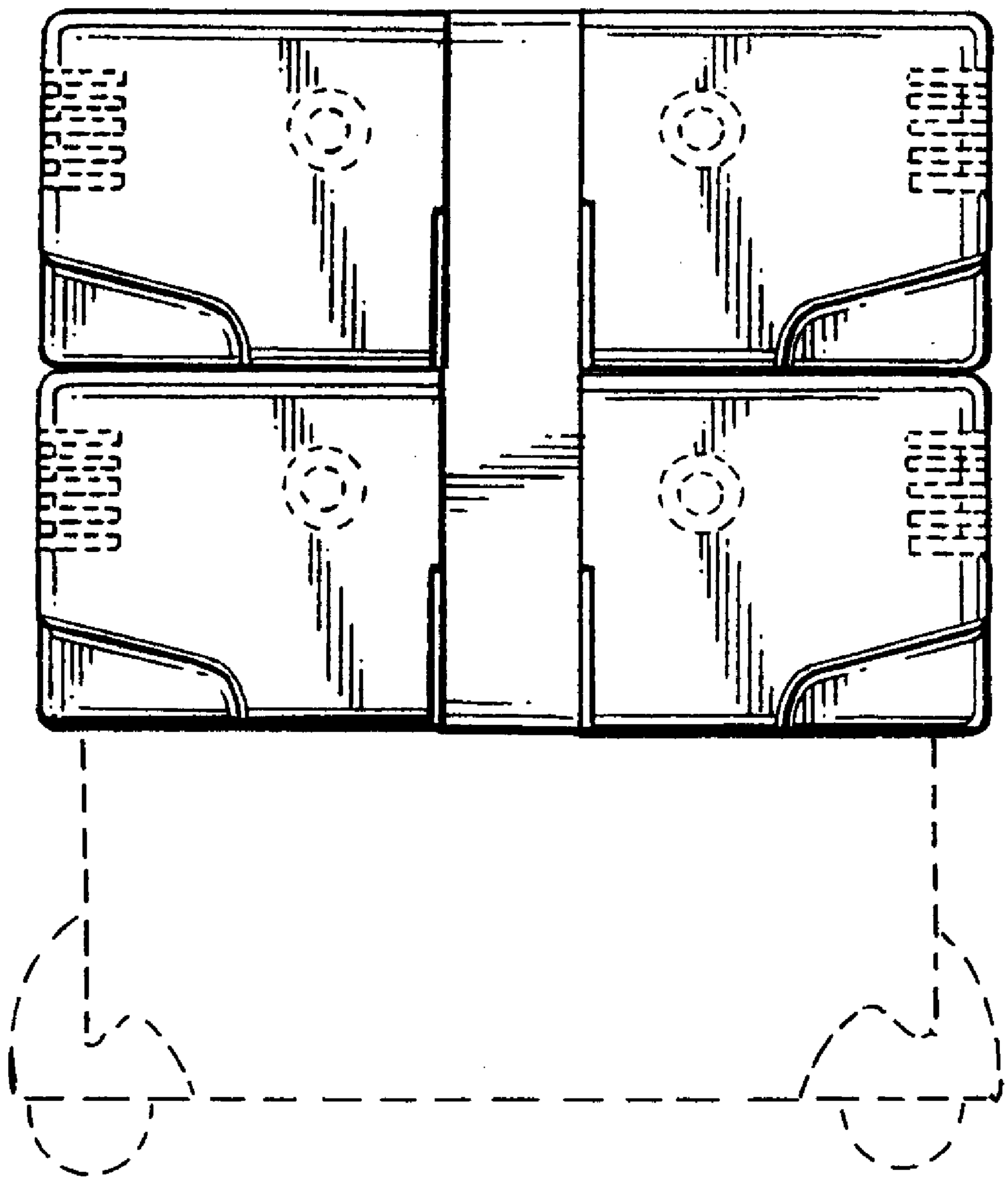

FIG. 3