US00D453717S

(12) United States Design Patent

Hawker et al.

(10) Patent No.: US D453,717 S
(45) Date of Patent: ** Feb. 19, 2002

(54) **JOGGING STROLLER FRAME**

(75) Inventors: **Ryan Moss Hawker**, Birdsboro, PA (US); **Jeng Jun Xu**, Dongguan (CN); **Wen Bo Len**, Dongguan (CN); **Gou Zheng Wen**, Dongguan (CN); **Zeng Wu Rong**, Dongguan (CN); **Hang Xue Qun**, Dongguan (CN); **Zhang Feng Yun**, Dongguan (CN)

(73) Assignees: **Graco Children's Products Inc.**, Elverson, PA (US); **Dongguan Wonderland Nurserygoods Co. Ltd.**, Dongguan (CN)

(**) Term: **14 Years**

(21) Appl. No.: **29/141,142**

(22) Filed: **May 2, 2001**

(51) **LOC (7) Cl.** **12-12**
(52) **U.S. Cl.** **D12/129**
(58) **Field of Search** D12/128–133; D34/18; 280/36, 38, 42, 47.38, 641, 643, 642, 650, 658

(56) **References Cited**

U.S. PATENT DOCUMENTS

D297,525	S		9/1988	Baechler
D350,923	S		9/1994	Schmidlin et al.
D356,760	S		3/1995	Baechler
D357,890	S		5/1995	Eyman et al.
D362,419	S		9/1995	Chih
D363,903	S		11/1995	Chiu
D369,579	S		5/1996	Baechler
D369,992	S		5/1996	Baechler
D370,194	S		5/1996	Baechler et al.
D371,094	S		6/1996	Hinkston
D379,333	S		5/1997	Jacobs
D382,234	S		8/1997	Hinkston
5,669,624	A	*	9/1997	Eichhorn 280/642
D385,514	S		10/1997	Eyman et al.
D397,316	S		8/1998	Baechler
D399,458	S		10/1998	Ziegler et al.
D402,597	S		12/1998	Everett
D409,530	S		5/1999	Chen et al.
D409,531	S		5/1999	Baechler
D415,073	S		10/1999	Meehan et al.
D418,780	S		1/2000	Everett et al.
D419,113	S		1/2000	Everett
D422,948	S	*	4/2000	Huang D12/129
D426,176	S		6/2000	Sutherland et al.
D431,798	S		10/2000	Strycker et al.
D442,895	S	*	5/2001	Chiu D12/129

OTHER PUBLICATIONS

Advertisement, "New Runner LX" by Chicco, p. 196 prior to May 2, 2001.

* cited by examiner

Primary Examiner—Marcus A. Jackson
(74) *Attorney, Agent, or Firm*—Foley & Lardner

(57) **CLAIM**

The ornamental design for a jogging stroller frame, as shown and described.

DESCRIPTION

FIG. **1** is a perspective view of a jogging stroller frame showing our new design;
FIG. **2** is a left-side view thereof;
FIG. **3** is a rear elevation view thereof;
FIG. **4** is a front elevation view thereof;
FIG. **5** is a bottom plan view thereof;
FIG. **6** is a top plan view thereof;
FIG. **7** is a perspective view of a jogging stroller frame showing another embodiment of our new design;
FIG. **8** is a left-side view thereof;
FIG. **9** is a rear elevation view thereof;
FIG. **10** is a front elevation view thereof;
FIG. **11** is a bottom plan view thereof; and,
FIG. **12** is a top plan view thereof.
The right-side view of the embodiment of FIGS. **1–6** is a mirror image of the left-side view shown in FIG. **2**. The right-side view of the embodiment of FIGS. **7–12** is a mirror image of the left-side view shown in FIG. **8**.

1 Claim, 12 Drawing Sheets

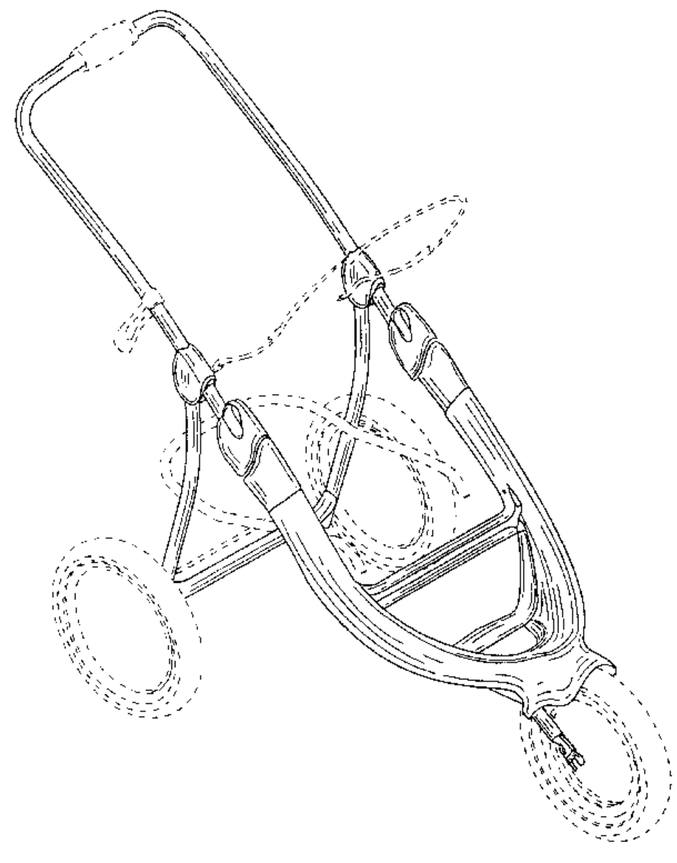

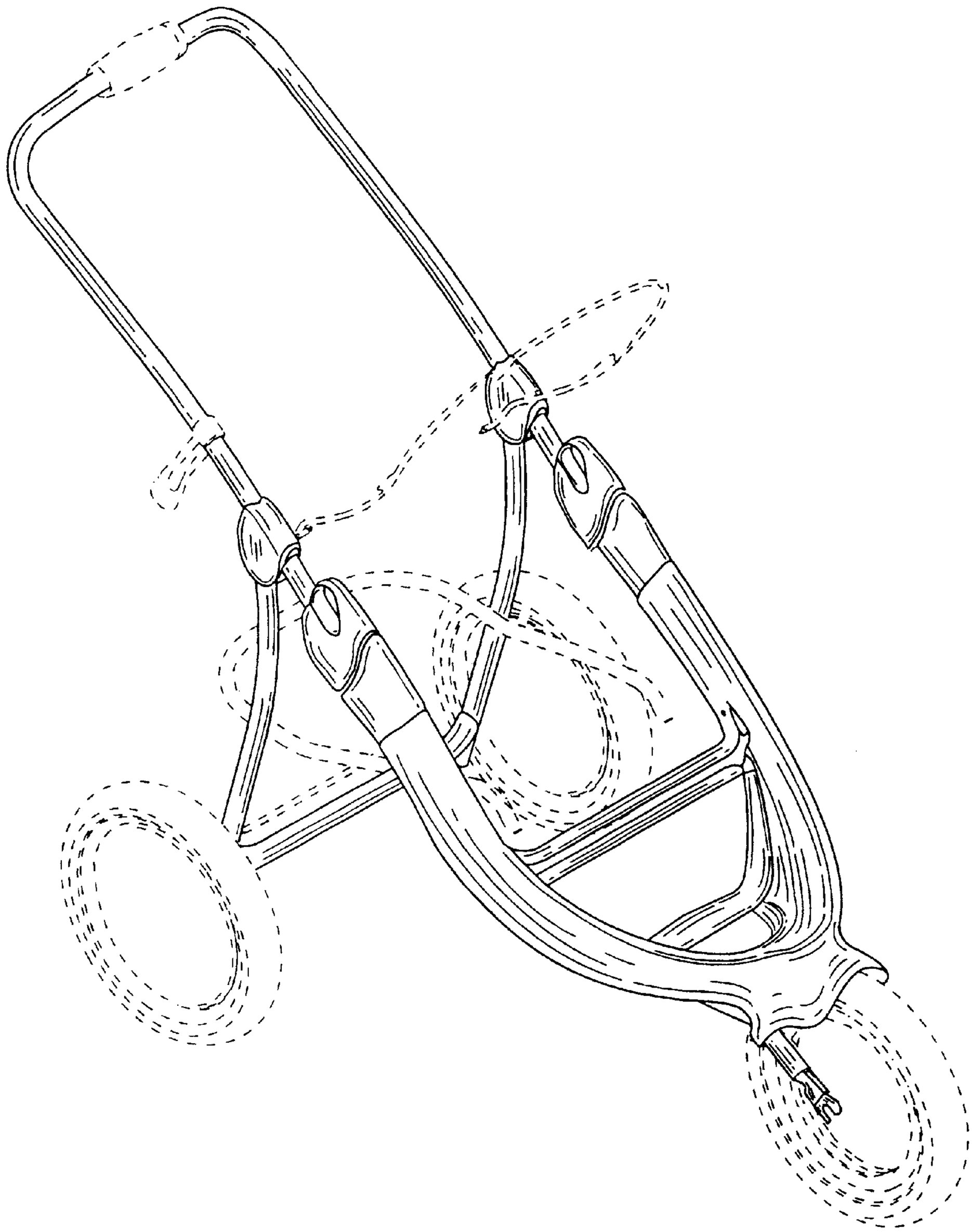

FIG. 1

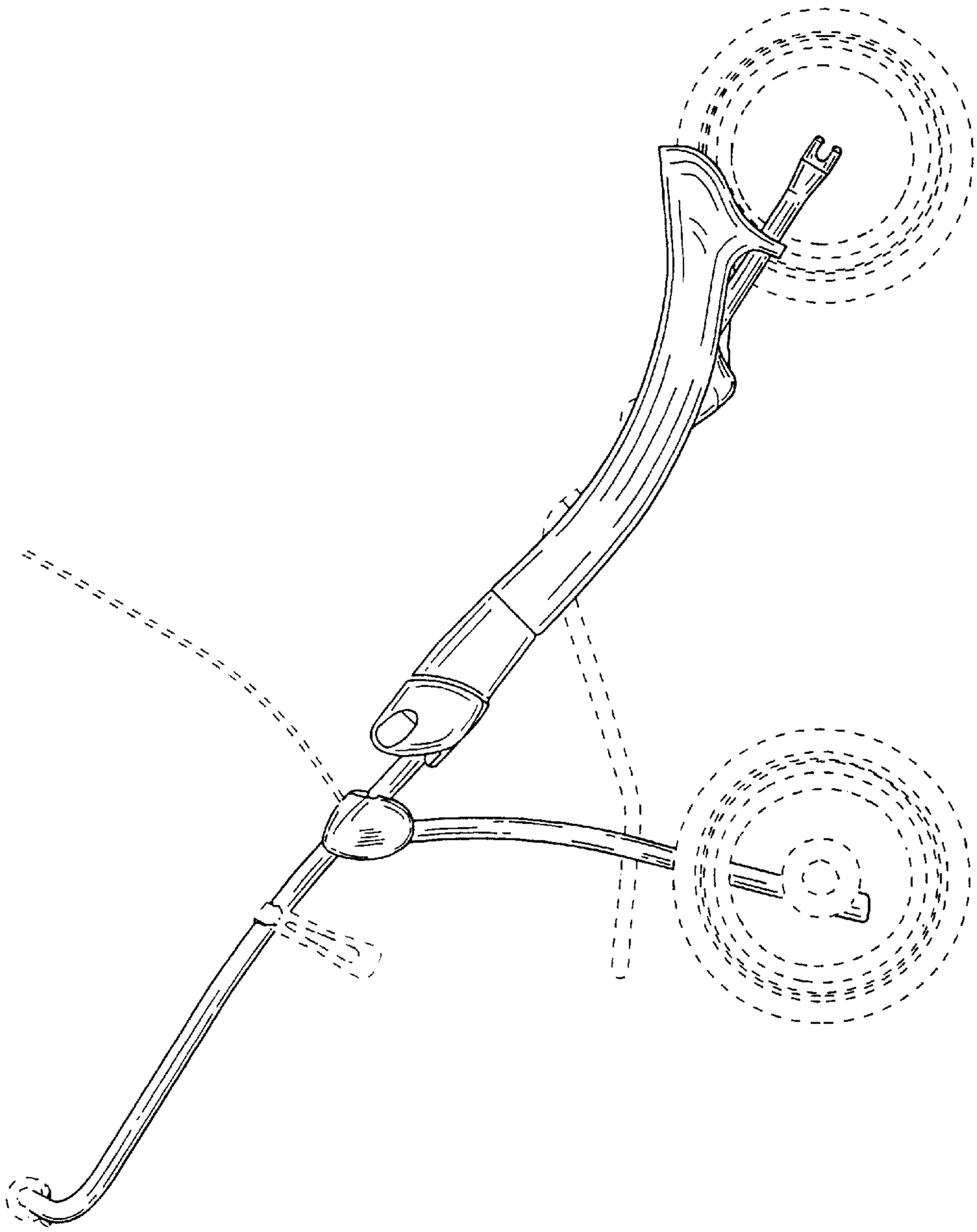

FIG. 2

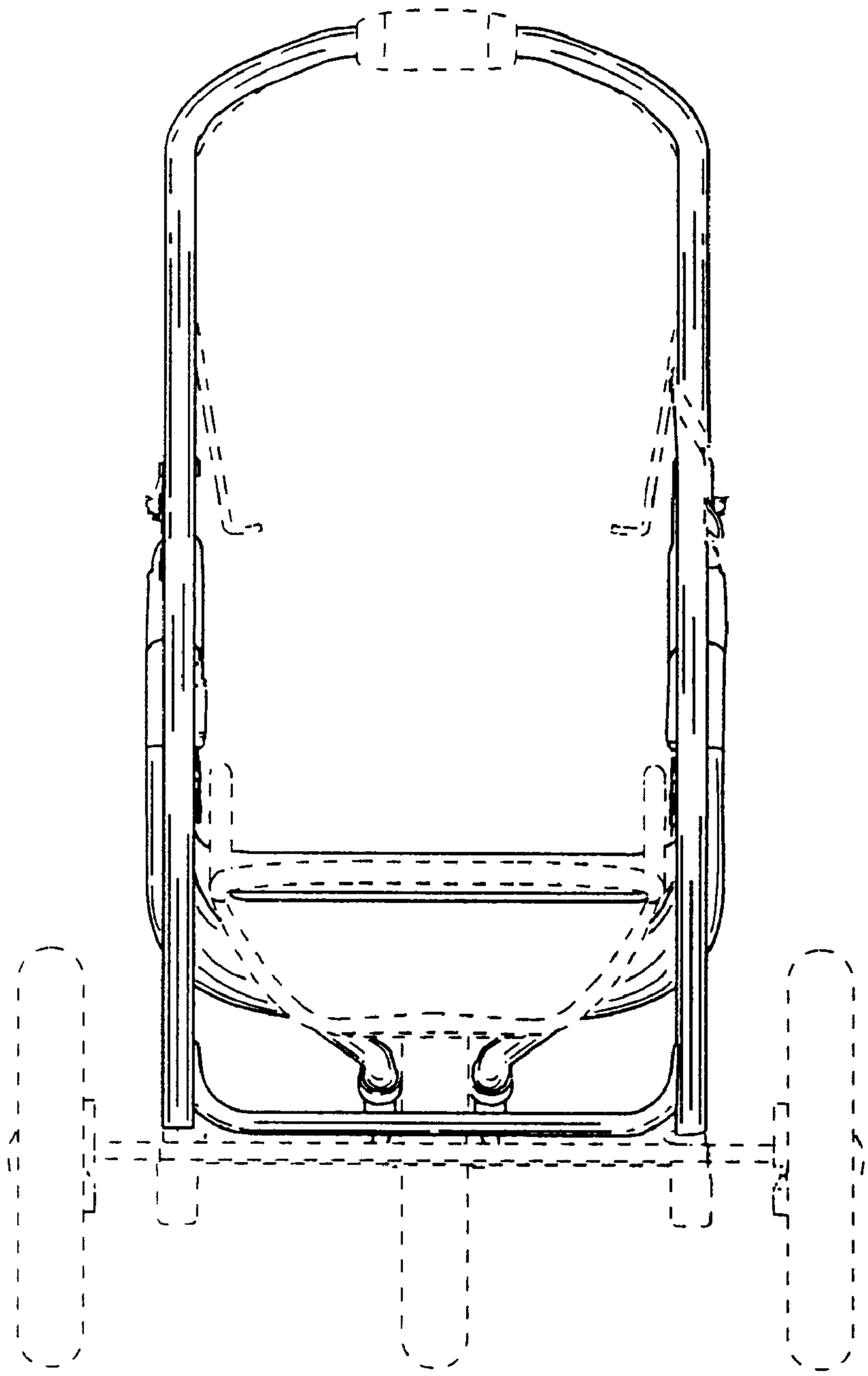

FIG. 3

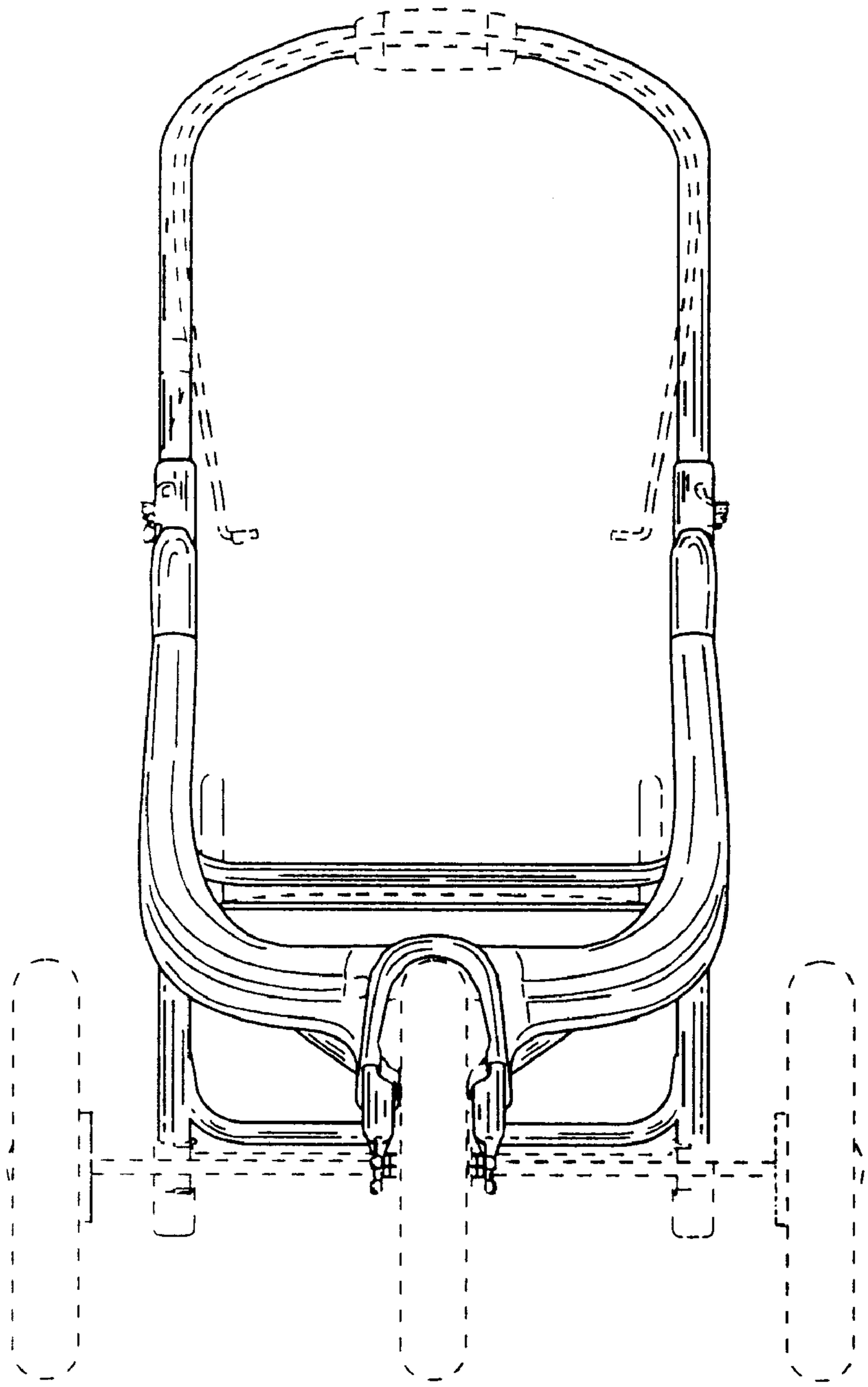

FIG. 4

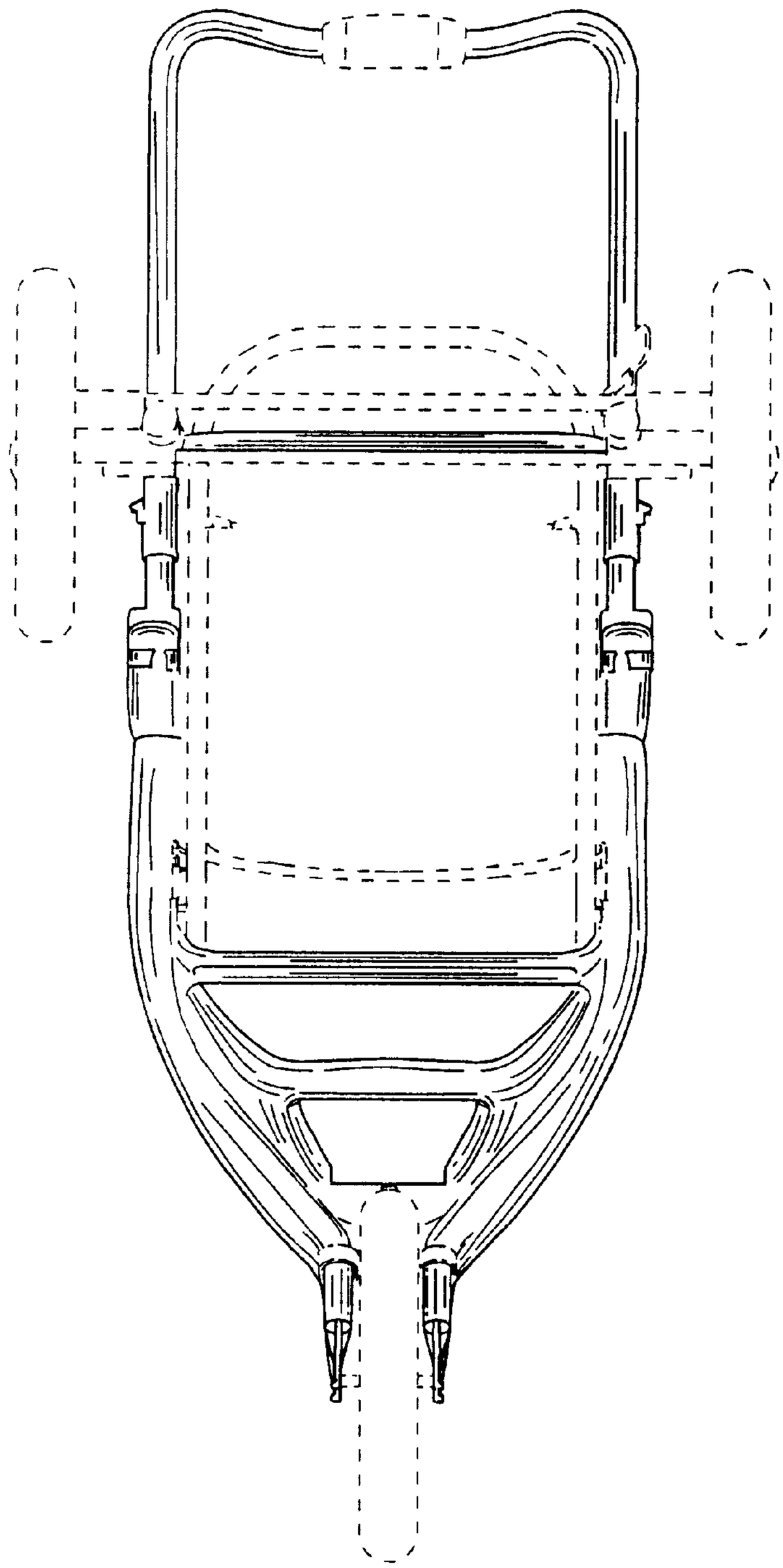

FIG. 5

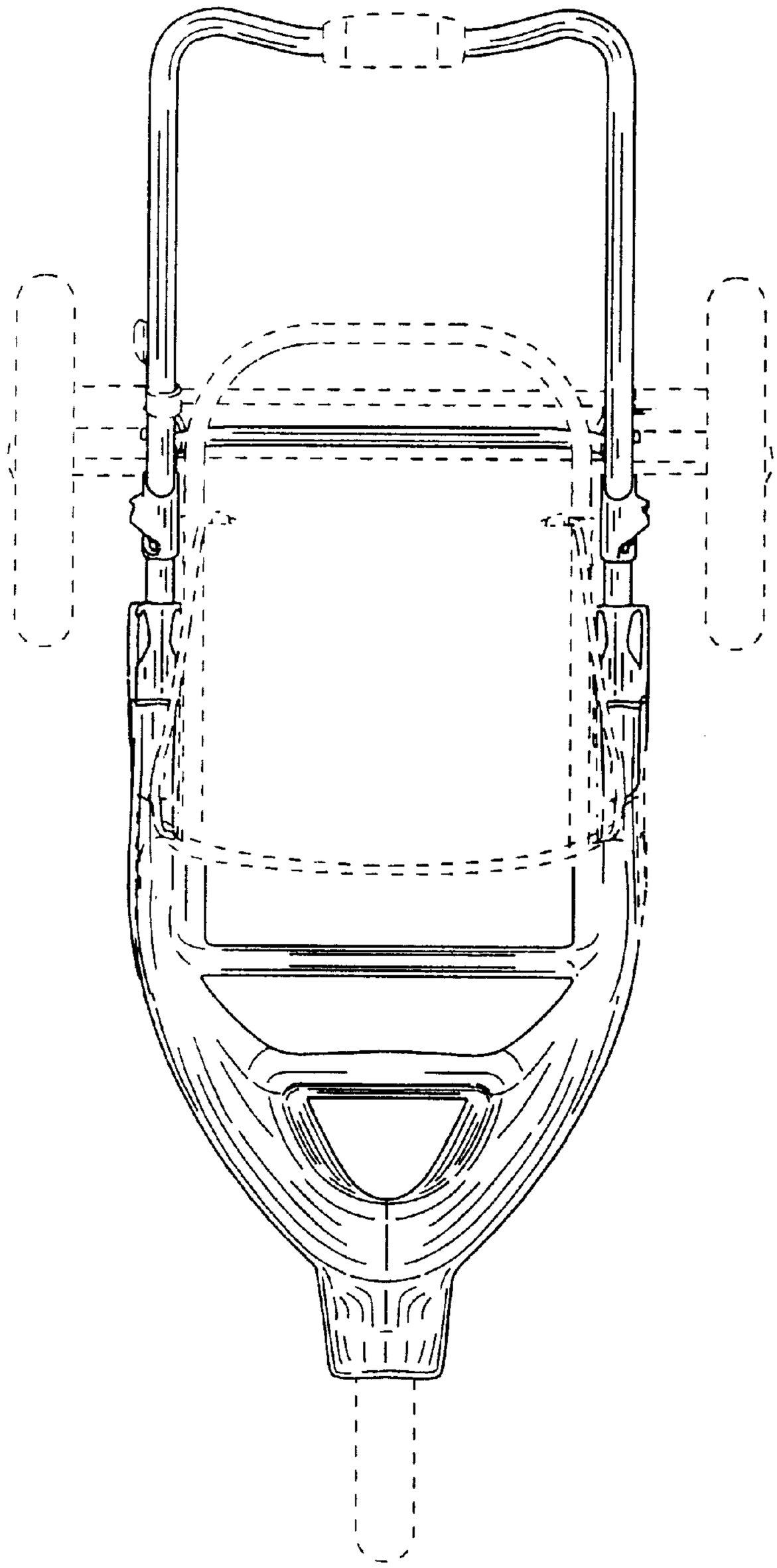

FIG. 6

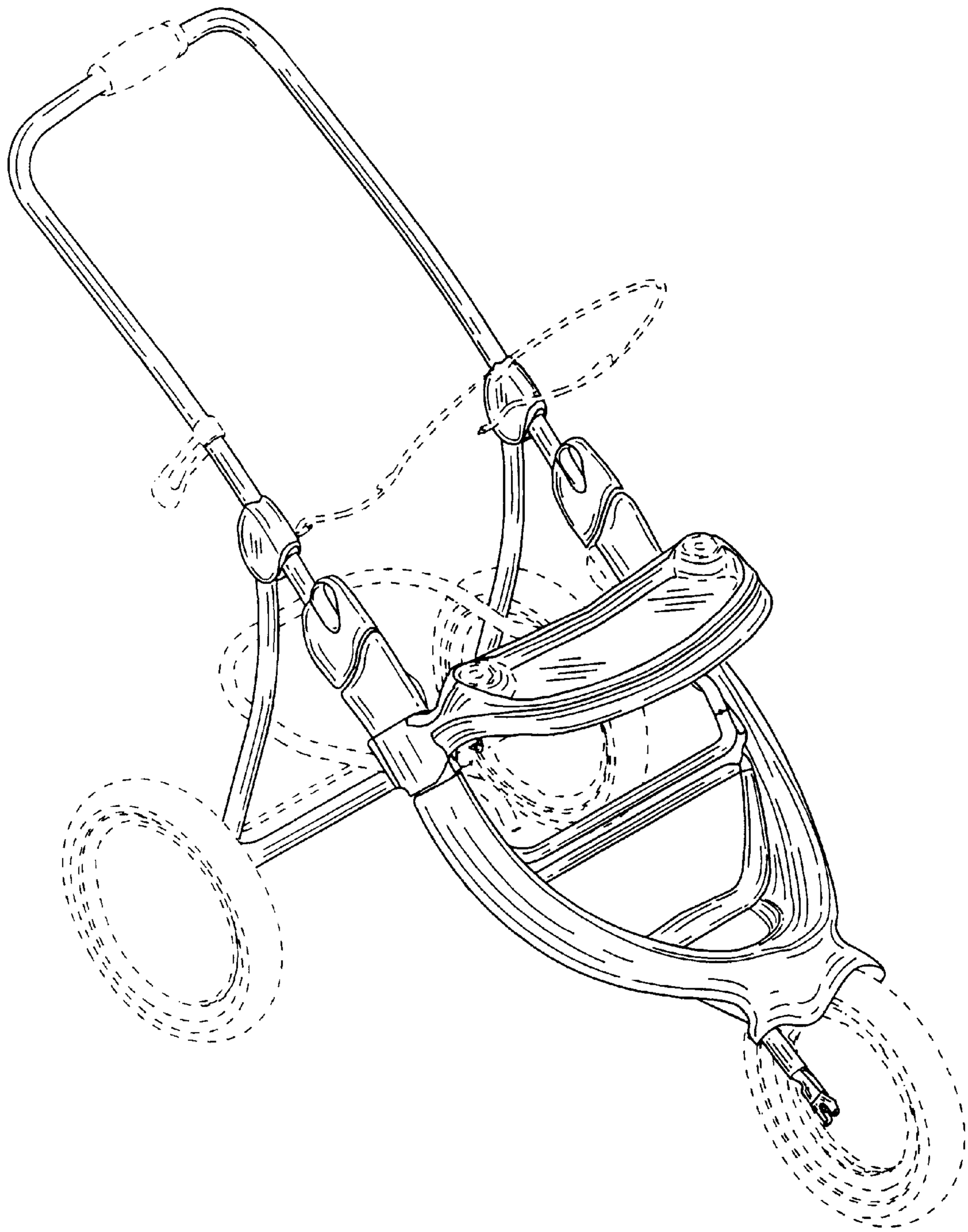

FIG. 7

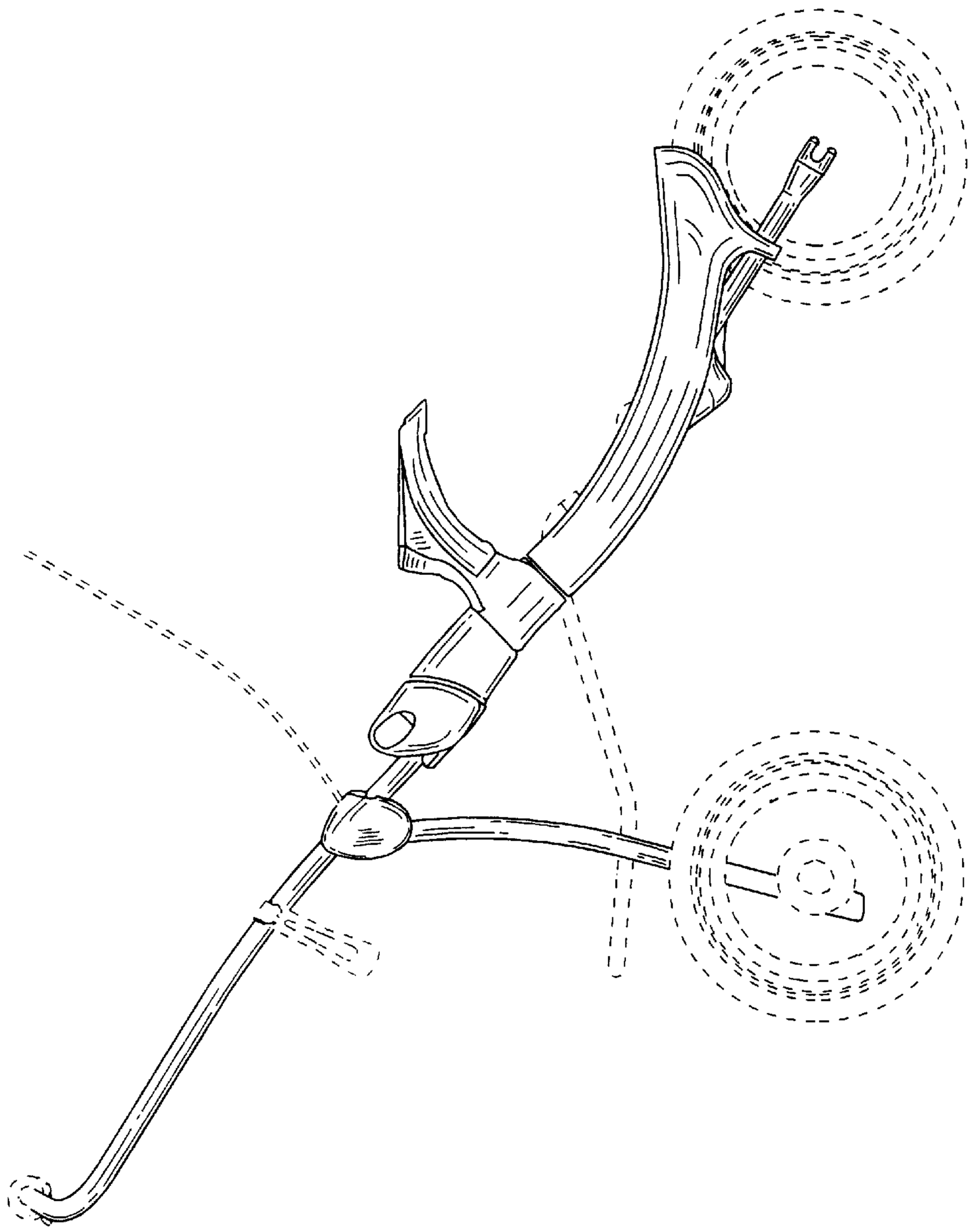

FIG. 8

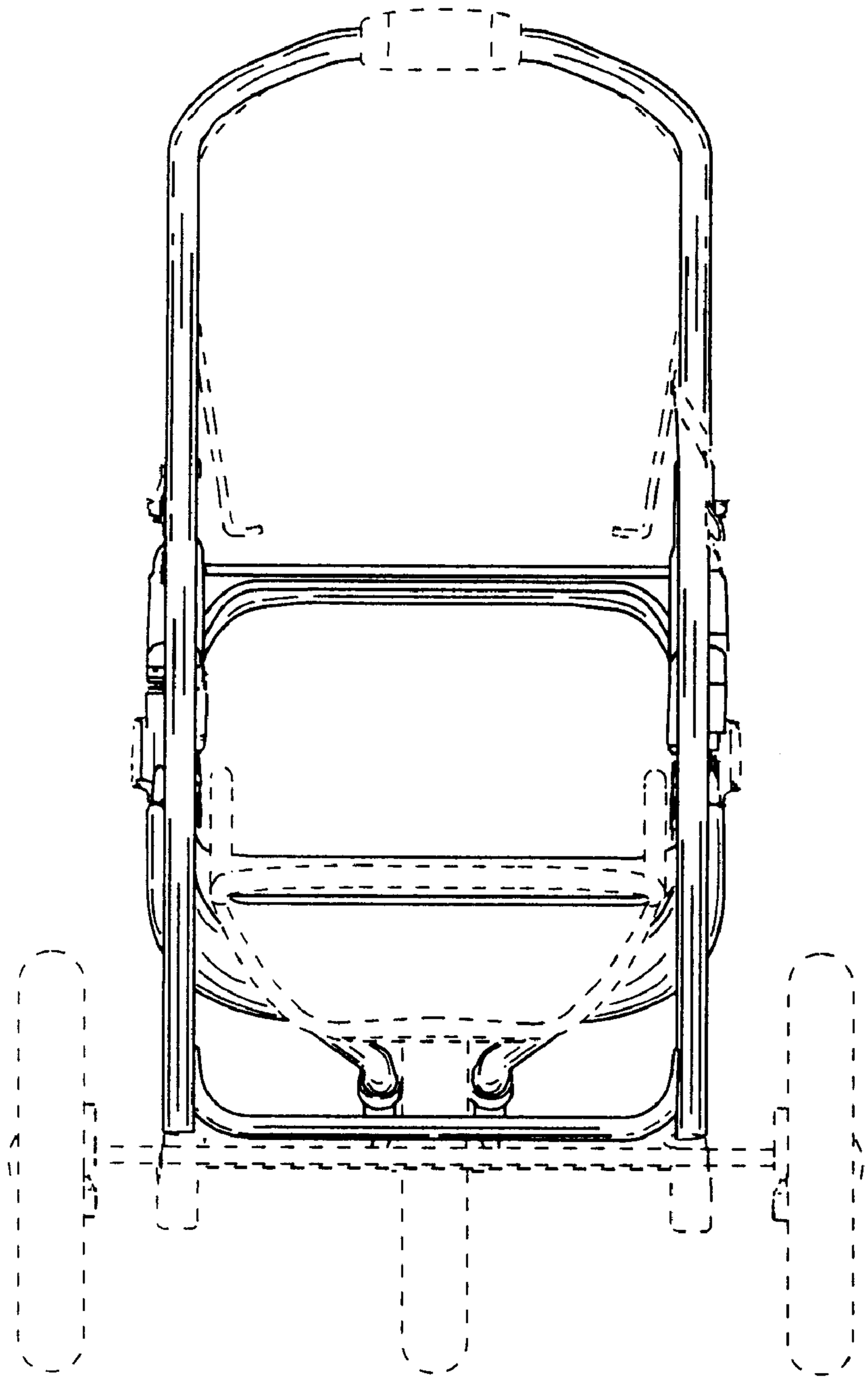

FIG. 9

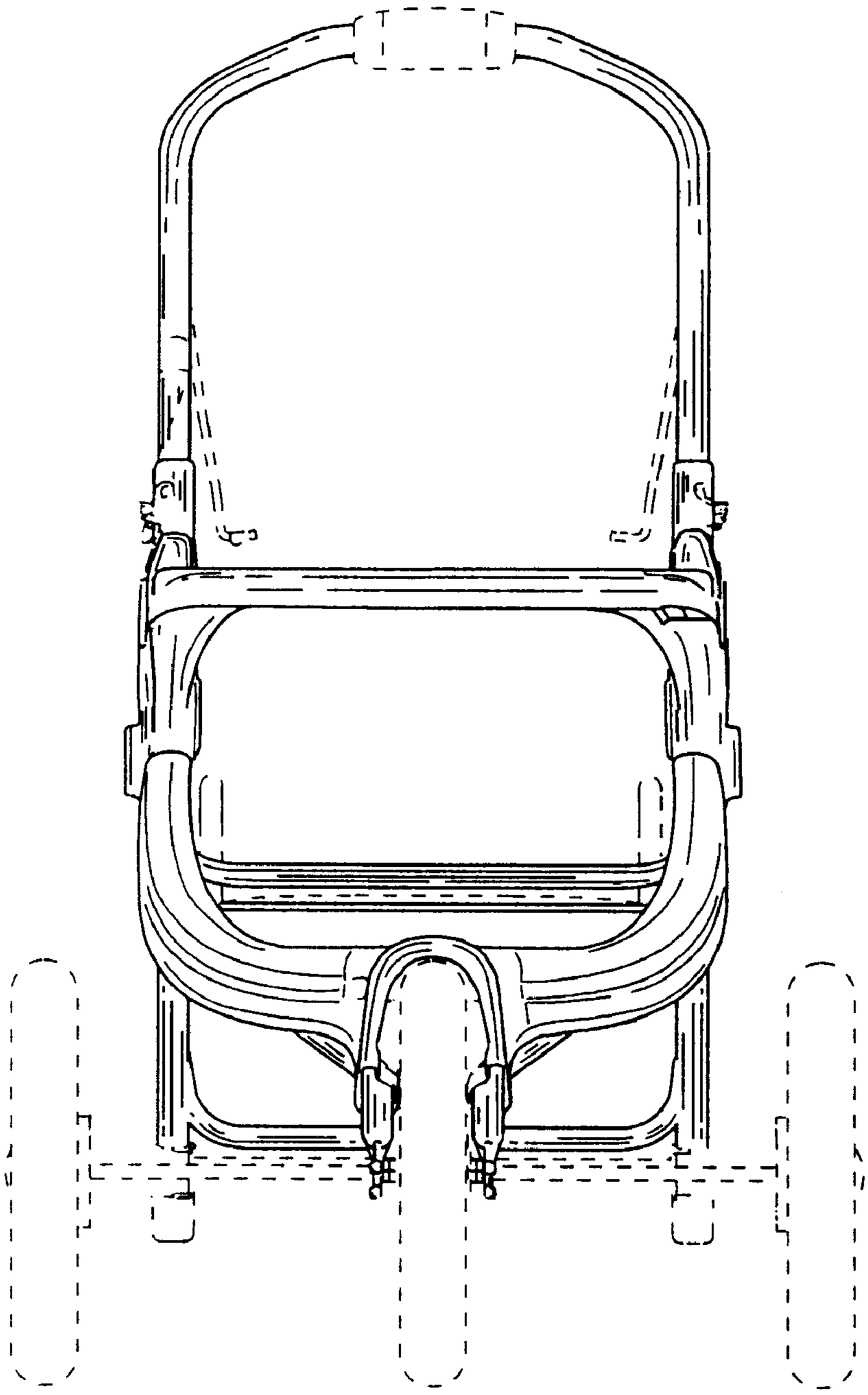

FIG. 10

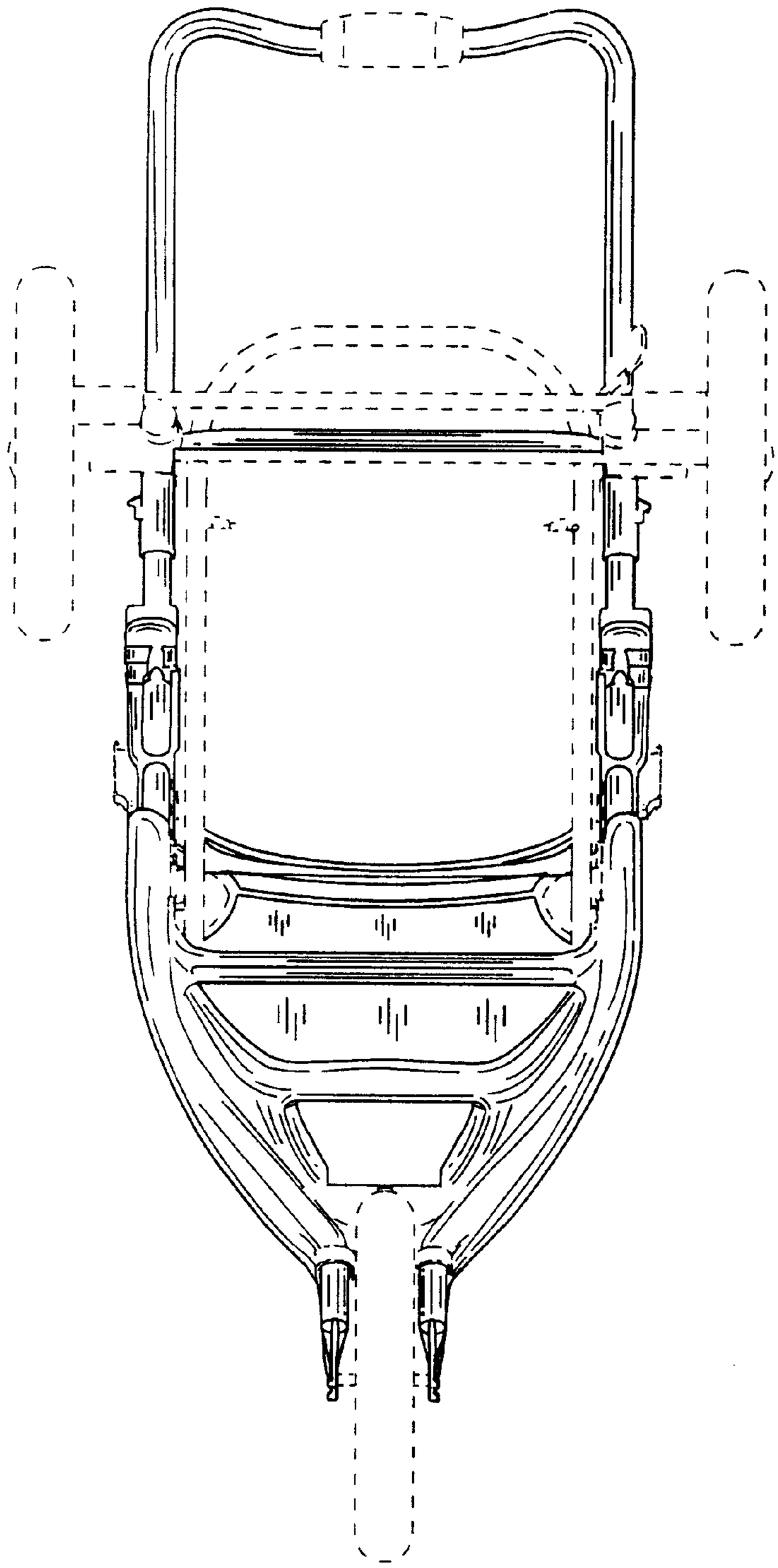

FIG. 11

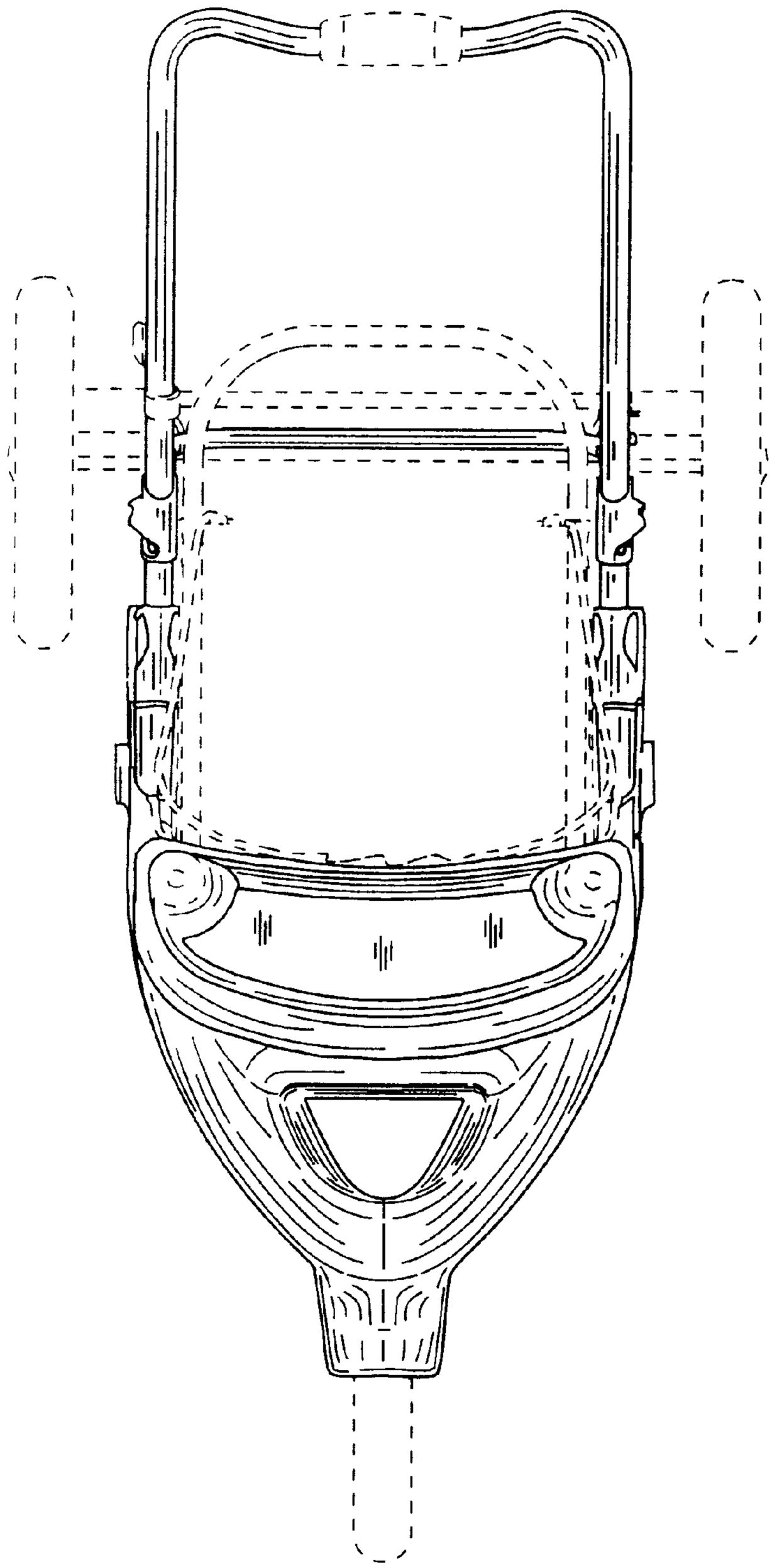

FIG. 12