US00D446741B1

(12) United States Design Patent

Johnson et al.

(10) Patent No.: US D446,741 S
(45) Date of Patent: ** Aug. 21, 2001

(54) **DETECTOR**

(75) Inventors: **Dale H. Johnson**, Elgin; **Thomas Young**, South Elgin; **Michael D. Berg**, Carol Stream, all of IL (US)

(73) Assignee: **Pittway Corporation**, Chicago, IL (US)

(**) Term: **14 Years**

(21) Appl. No.: **29/128,611**

(22) Filed: **Aug. 28, 2000**

(51) **LOC (7) Cl.** **10-05**
(52) **U.S. Cl.** **D10/106**
(58) **Field of Search** D10/104, 106, D10/116, 121; 340/571, 572, 573, 577, 578, 628, 629, 630

(56) **References Cited**

U.S. PATENT DOCUMENTS

D. 249,481	9/1978	Conforti et al. .	
D. 249,482	9/1978	Conforti et al. .	
D. 249,483	9/1978	Conforti et al. .	
D. 258,353	2/1981	Mango et al. .	
D. 261,997	11/1981	Westphal .	
D. 262,868	2/1982	Westphal .	
D. 262,952	2/1982	Hanig .	
D. 271,287	11/1983	Fenne .	
D. 276,417	11/1984	Fenne .	
D. 283,407	4/1986	Fenne .	
D. 284,748	7/1986	Fenne .	
D. 308,835	6/1990	Fenne .	
D. 308,836	6/1990	Fenne .	
D. 346,981	5/1994	Ratzlaff .	
D. 355,862	2/1995	Tice et al. .	
D. 356,050	3/1995	Tice et al. .	
D. 371,086	6/1996	Collins .	
D. 377,460	1/1997	Nelson et al. .	
D. 382,217	8/1997	Akiyama et al. .	
D. 382,825	8/1997	Amleshi .	
D. 388,352	* 12/1997	Repp et al.	D10/106
D. 391,185	2/1998	Tomizawa .	
D. 396,820	8/1998	Wallace .	
D. 399,157	10/1998	Hsu et al. .	
D. 412,676	8/1999	Layes .	
D. 433,953	11/2000	Woznicki et al. .	
D. 435,800	* 1/2001	Higashi et al.	D10/106
5,448,462	9/1995	Moran, III .	

FOREIGN PATENT DOCUMENTS

70719	6/1992	(CA) .
26724/203	10/1964	(GB) .

OTHER PUBLICATIONS

System Sensor, Model 18002–Wire Systems Detectors, 2 pg. brochure, May 1988.
System Sensor, 400 Serial Next Generation Detectors, 2 pg. brochure, 1991.
System Sensor, 4451E/5451E2 Plug–In Thermal Detectors; 2 pg. brochure, Jun., 1992.

(List continued on next page.)

Primary Examiner—Marcus A. Jackson
(74) *Attorney, Agent, or Firm*—Rockey, Milnamow & Katz, Ltd.

(57) **CLAIM**

The ornamental Design for a detector, as shown and described.

DESCRIPTION

FIG. **1** is a perspective view of a design for a detector in accordance with the present invention;
FIG. **2** is a side elevational view of the detector of FIG. **1**, with the opposite sides being a mirror image thereof;
FIG. **3** is a top plan view of the detector of FIG. **1**;
FIG. **4** is a perspective view of an alternate embodiment of the design of the detector in accordance with the present invention;
FIG. **5** is a side elevational view of the detector of FIG. **4**, with the opposite sides being a mirror image thereof; and,
FIG. **6** is a top plan view of the detector of FIG. **4**.
The bottom of the respective detectors has not been illustrated. It is unadorned and is not part of the present invention.

1 Claim, 2 Drawing Sheets

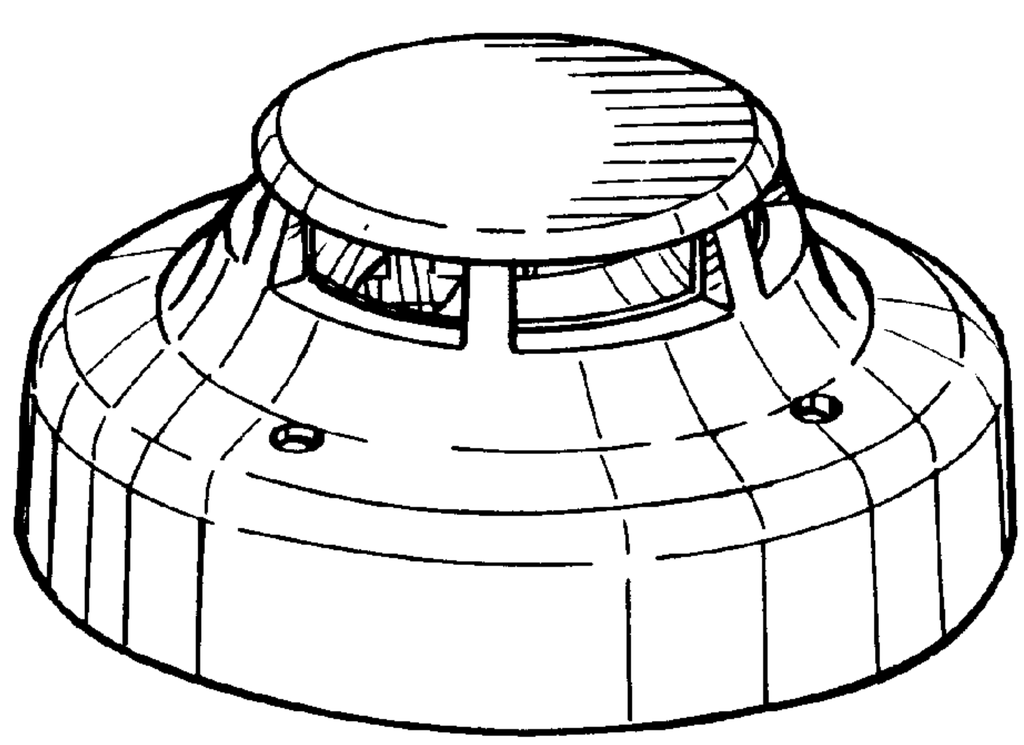

OTHER PUBLICATIONS

System Sensor, 400 Series Ionization Smoke Detectors; 2 pg. brochure, Oct. 1991.
System Sensor, 2851 Series 2/4/6–Wire systems Detectors, 2 pg. brochure, Oct. 1988.
System Sensor, 5551B Intelligent Fixed Temperature Thermal Sensor With Integral Communications, 2 pg. brochure, 1991.
System Sensor, 400 Series Plug–In Smoke Detectors, 4 pg. brochure, Jul. 1992.
Nittan Model 2KH advertisement, believed to have been published in Jun. 1992.
Tann 5400 Series Smoke Detector, two information sheets, believed to have been published on or about Jun., 1992.

* cited by examiner

FIG. 1

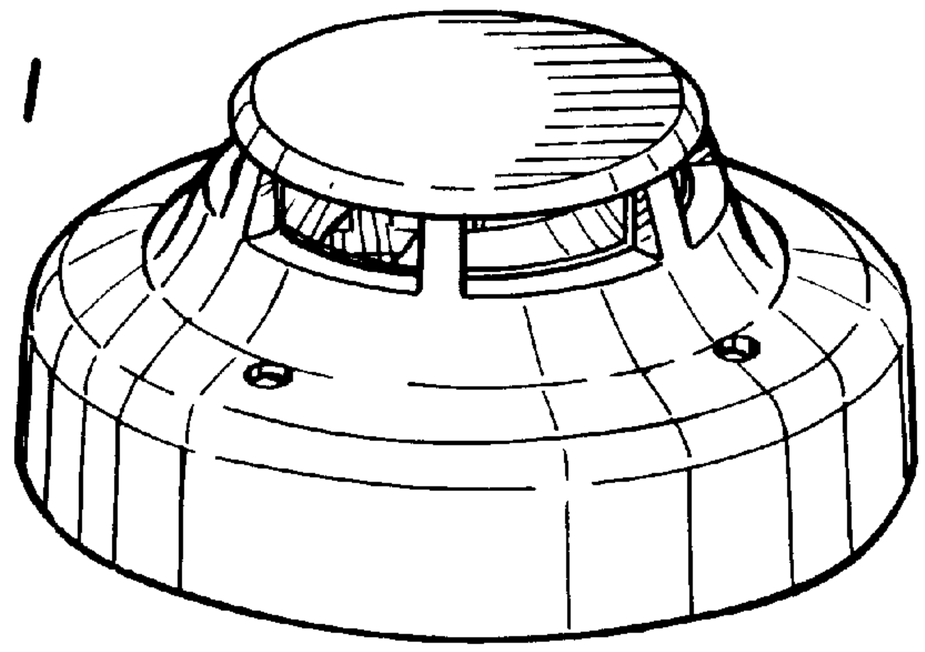

FIG. 3

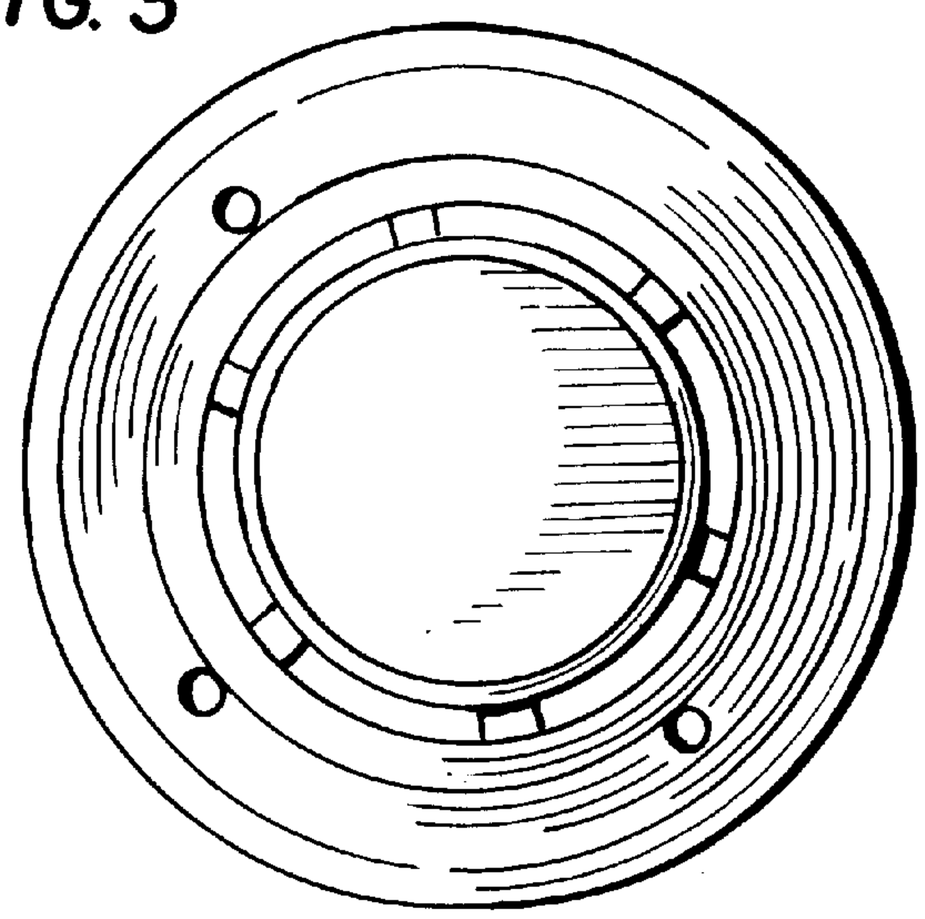

FIG. 2

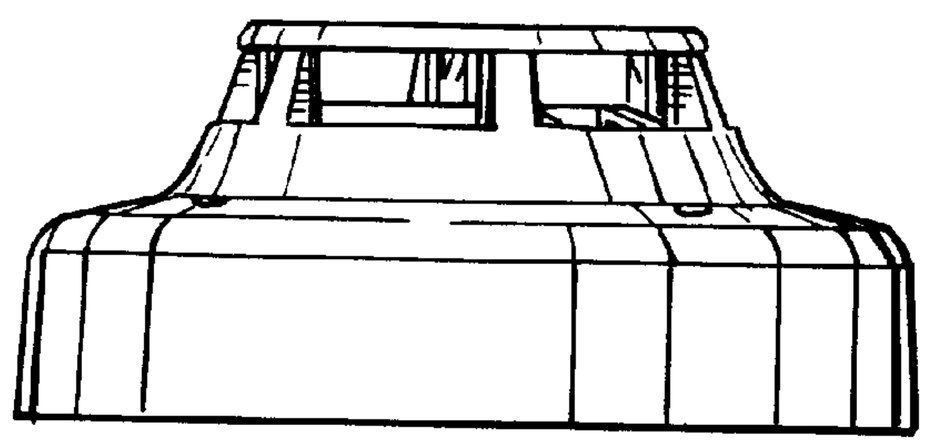

FIG.4

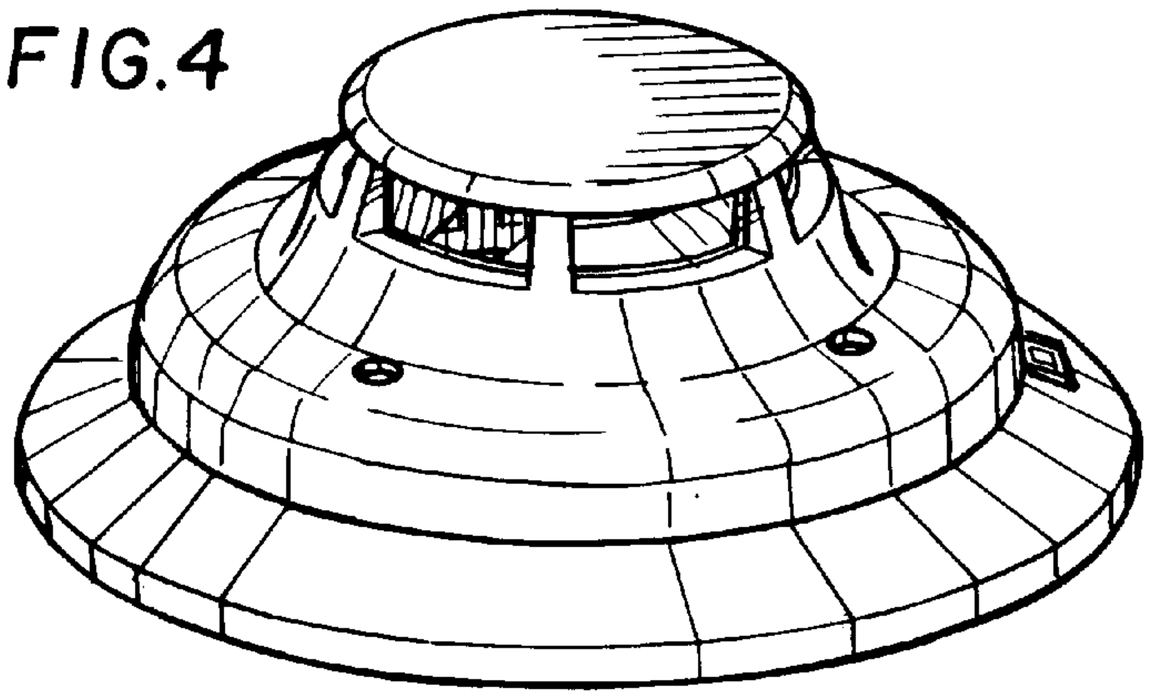

FIG.6

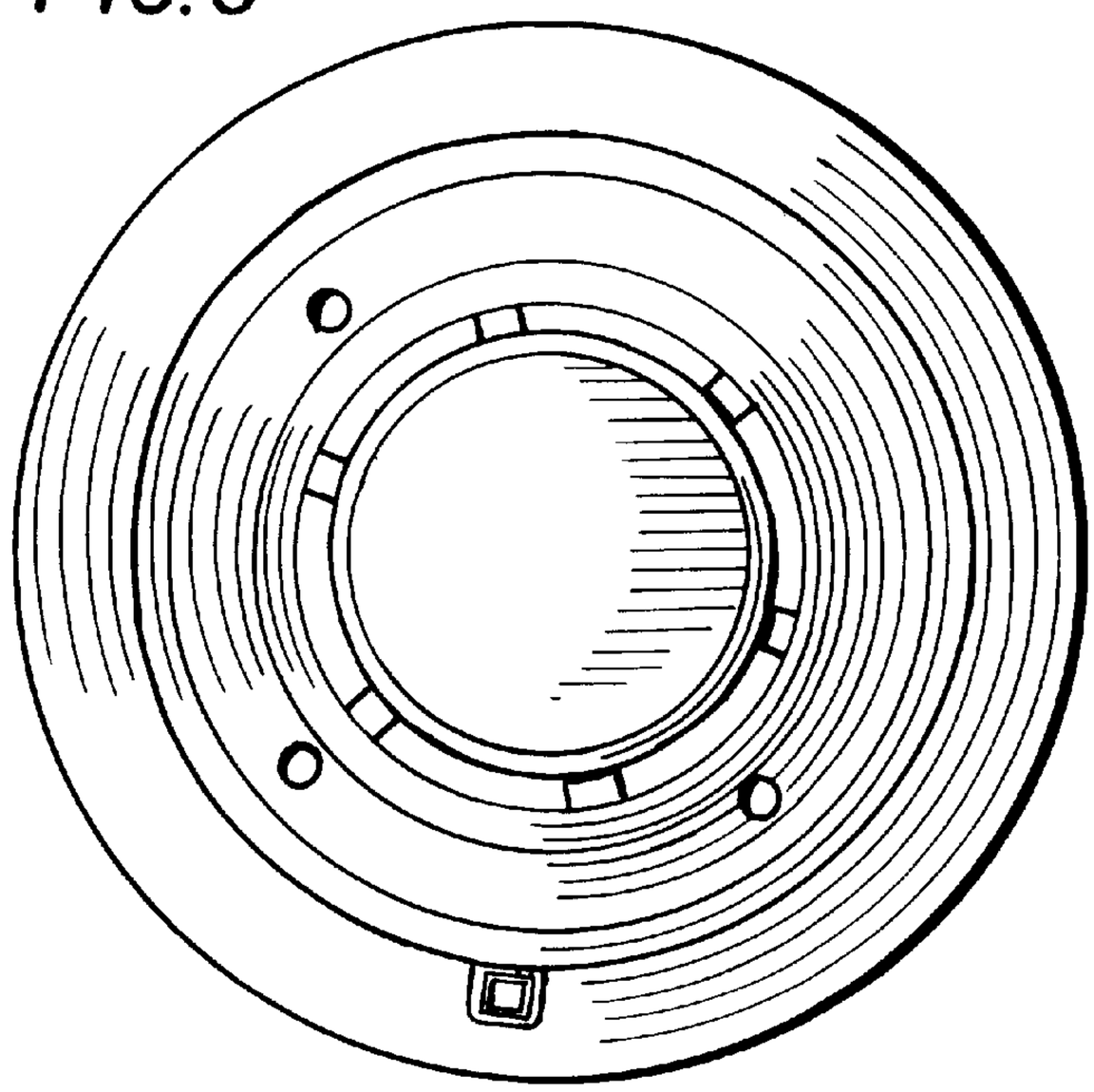
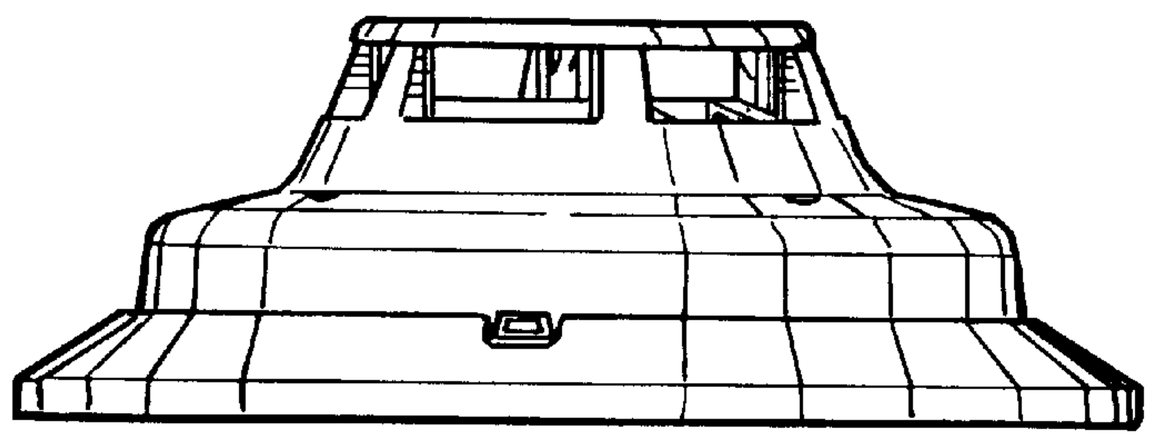
FIG.5