US00D444237S

(12) United States Design Patent

Stone

(10) Patent No.: US D444,237 S
(45) Date of Patent: ** Jun. 26, 2001

(54) **EAR COUPLER**

(75) Inventor: **Robert T. Stone**, Sunnyvale, CA (US)

(73) Assignee: **Kinderlife Instruments, Inc.**, Mountain View, CA (US)

(**) Term: **14 Years**

(21) Appl. No.: **29/133,571**

(22) Filed: **Nov. 28, 2000**

(51) **LOC (7) Cl.** **24-04**
(52) **U.S. Cl.** **D24/173**
(58) **Field of Search** D24/174, 173; 181/130, 135

(56) **References Cited**

U.S. PATENT DOCUMENTS

D. 270,566 * 9/1983 Bennett D24/174
D. 350,395 * 9/1994 Hangkansson D24/173
3,118,023 * 1/1964 Victoreen 381/322
4,055,233 * 10/1977 Huntress 181/135

* cited by examiner

Primary Examiner—Stella Reid
(74) *Attorney, Agent, or Firm*—Francis Law Group

(57) **CLAIM**

I claim the ornamental design for a ear coupler, as shown and described.

DESCRIPTION

FIG. **1** is a perspective view of my new design;
FIG. **2** is a front elevational view thereof; the rear elevational view thereof being identical to said front elevational view;
FIG. **3** is a right side elevational view thereof; the left side elevational view thereof being identical to said right side elevational view;
FIG. **4** is a top plan view thereof; and,
FIG. **5** is a bottom plan view thereof.

1 Claim, 1 Drawing Sheet

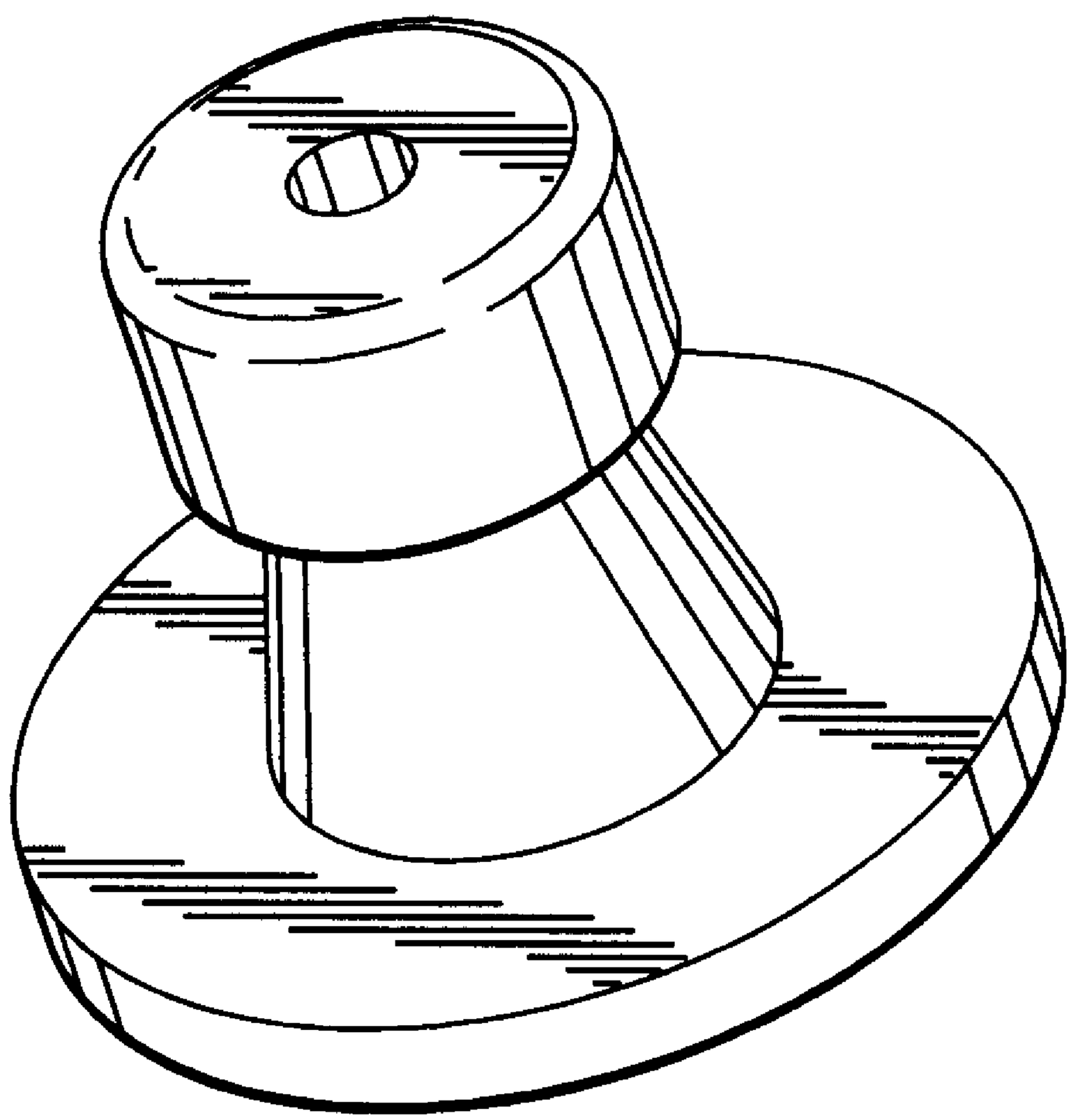

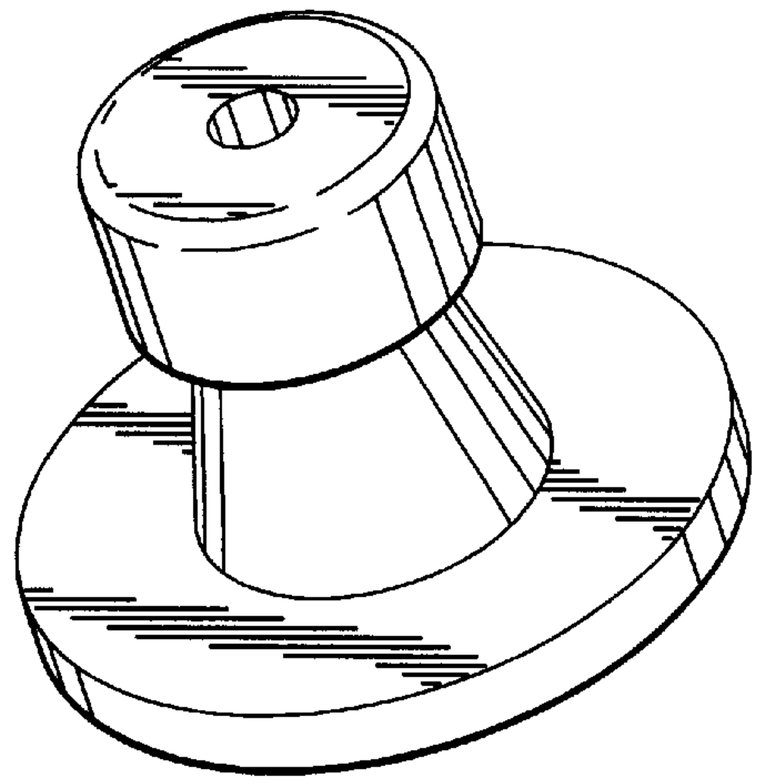

FIG.–1

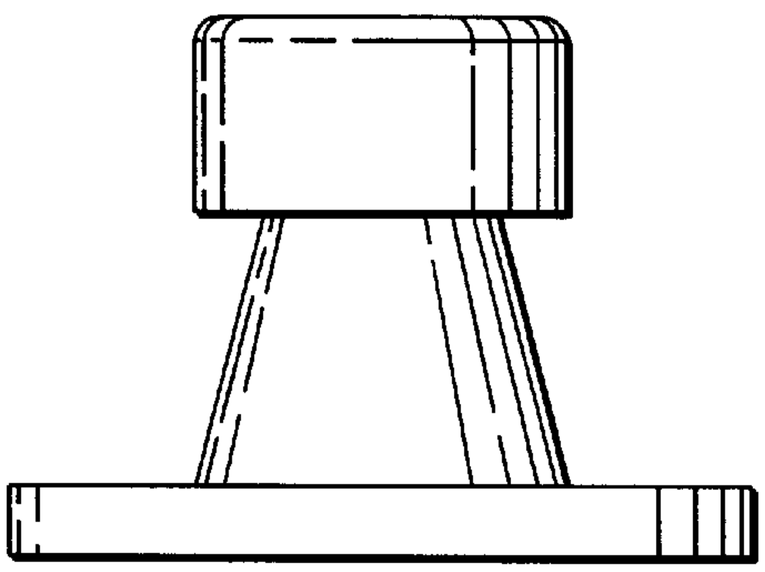

FIG.–2

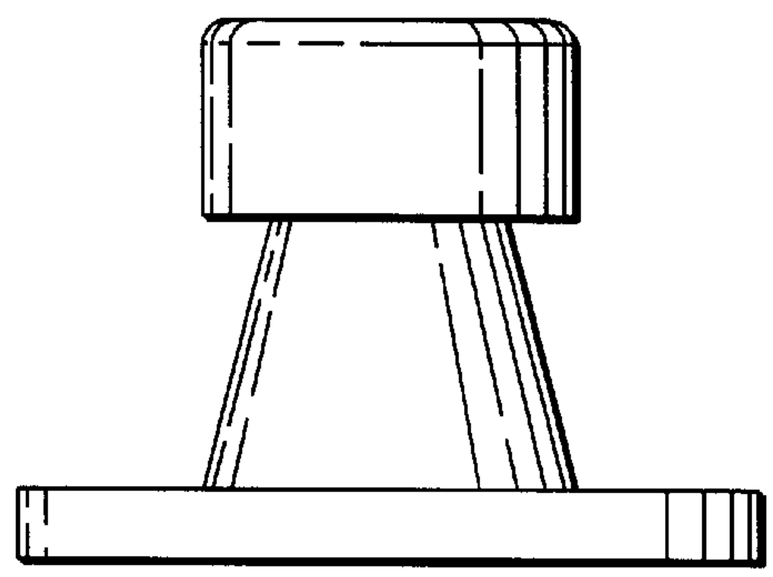

FIG.–3

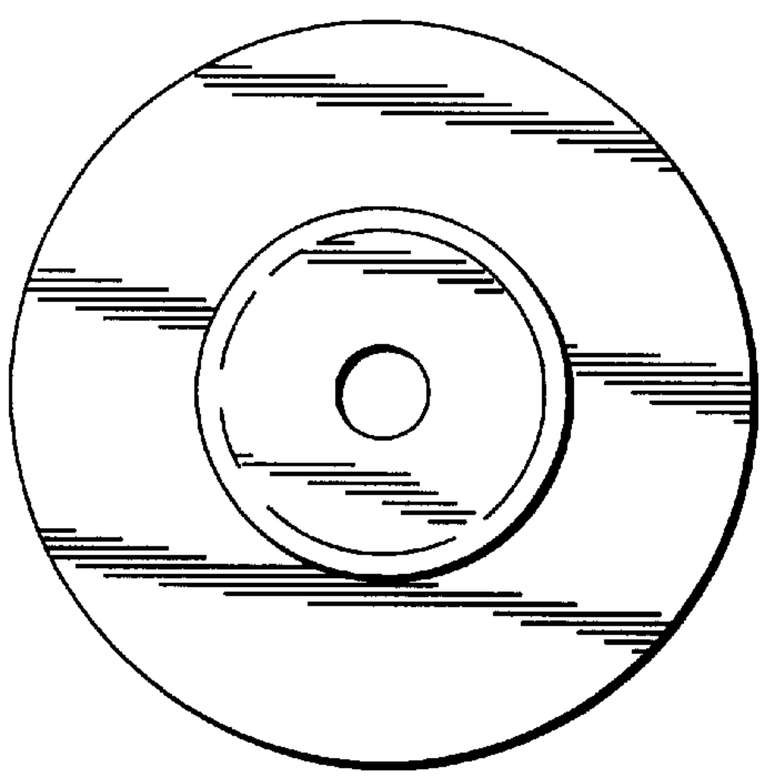

FIG.–4

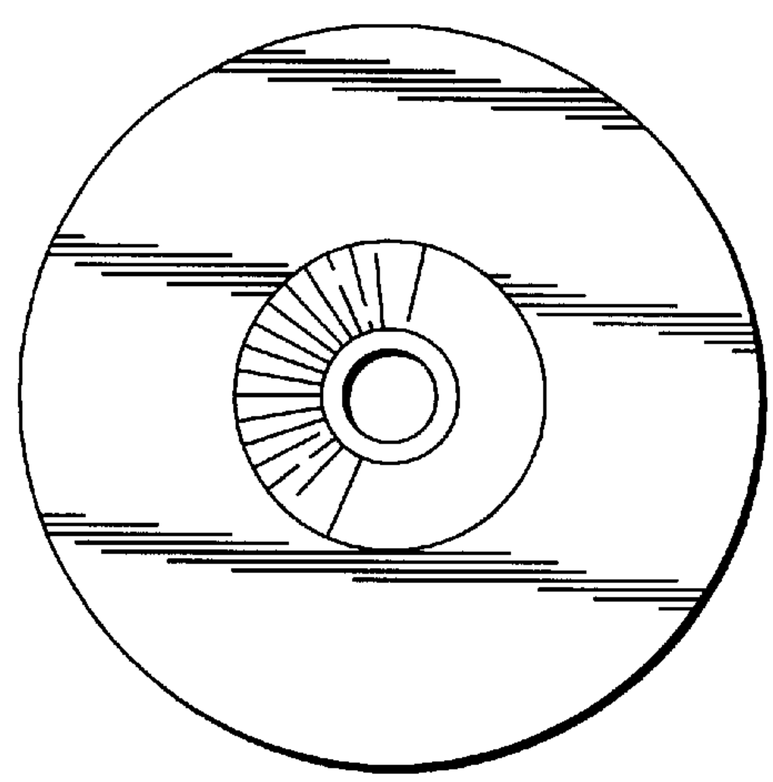

FIG.–5