US00D444184S

(12) United States Design Patent
Kettler

(10) Patent No.: US D444,184 S
(45) Date of Patent: ** Jun. 26, 2001

(54) **SCOOTER**

(75) Inventor: **Heinz Kettler**, Ense-Parsit (DE)

(73) Assignee: **Heinz Kettler GmbH & Co.**, Ense-Parsit (DE)

(**) Term: **14 Years**

(21) Appl. No.: **29/127,097**

(22) Filed: **Aug. 1, 2000**

(30) **Foreign Application Priority Data**

Feb. 1, 2000 (DE) 4 00 01 227

(51) **LOC (7) Cl.** **21-01**
(52) **U.S. Cl.** **D21/423**
(58) **Field of Search** D21/419, 421, D21/423, 424, 426, 435, 583, 760, 765, 771; D12/107, 110–112; 280/87.01, 87.021, 87.041, 87.042, 87.05; 180/181, 216

(56) **References Cited**

U.S. PATENT DOCUMENTS

D. 180,741 * 8/1957 Magoon D21/423
D. 295,428 * 4/1988 Cummings D21/423
D. 392,001 * 3/1998 Chen D12/117
D. 414,220 * 9/1999 Catto D21/423
D. 433,654 * 11/2000 Gorvine D12/107
4,799,701 * 1/1989 Lindau 280/87.041
4,842,091 * 6/1989 Badsey 180/181
5,039,121 * 8/1991 Holter 280/87.041

* cited by examiner

Primary Examiner—Raphael Barkai
(74) *Attorney, Agent, or Firm*—Greenblum & Bernstein, P.L.C.

(57) **CLAIM**

I claim the ornamental design for a scooter, as shown and described.

DESCRIPTION

FIG. **1** is a front perspective of the left side, showing my new design;
FIG. **2** is a front end view thereof;
FIG. **3** is a rear end view thereof;
FIG. **4** is a right side view thereof;
FIG. **5** is a left side view thereof;
FIG. **6** is a top plan view thereof;
FIG. **7** is a bottom plan view thereof; and,
FIG. **8** is a right side view of the scooter in a partially disassembled state.

1 Claim, 8 Drawing Sheets

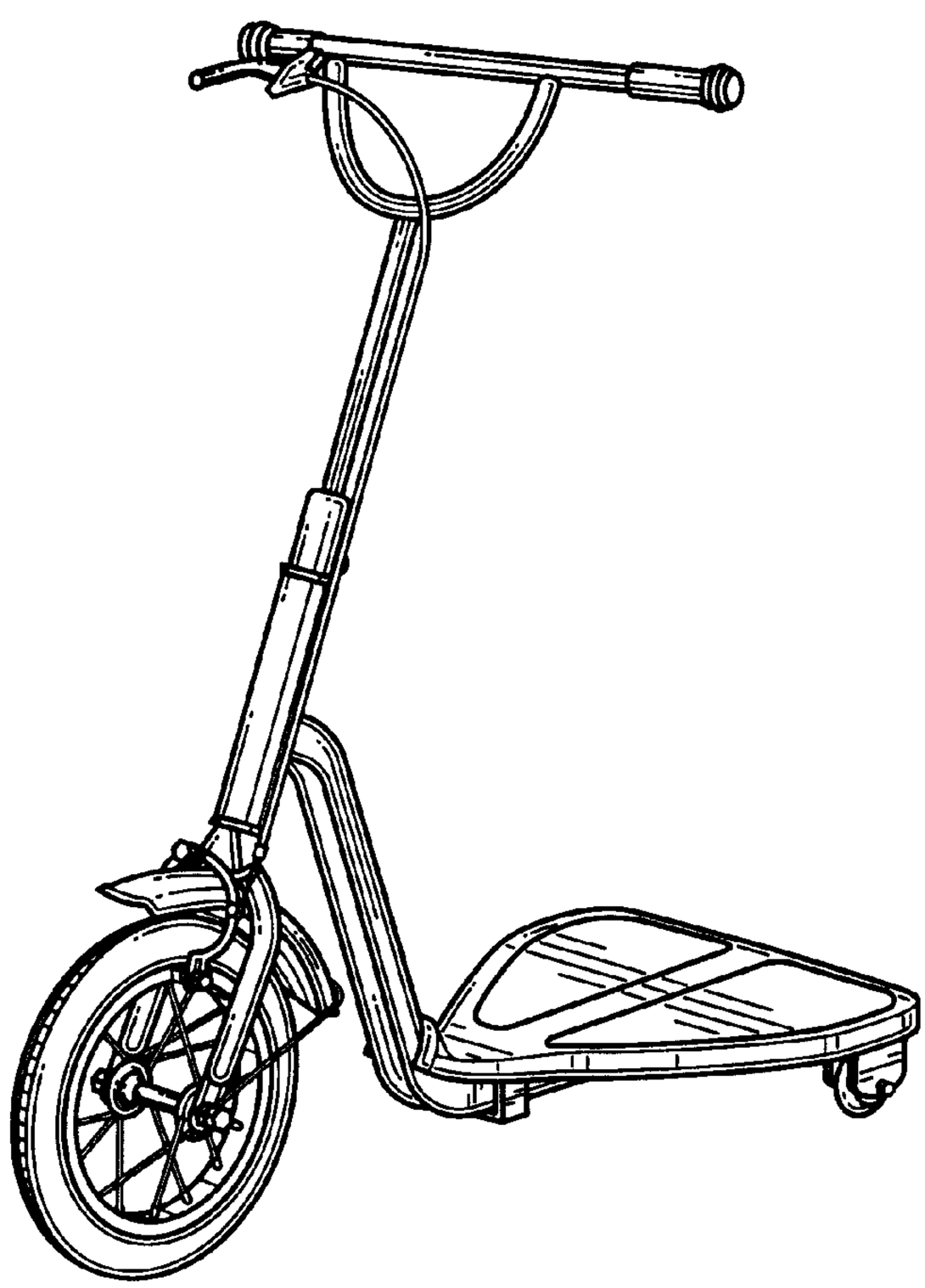

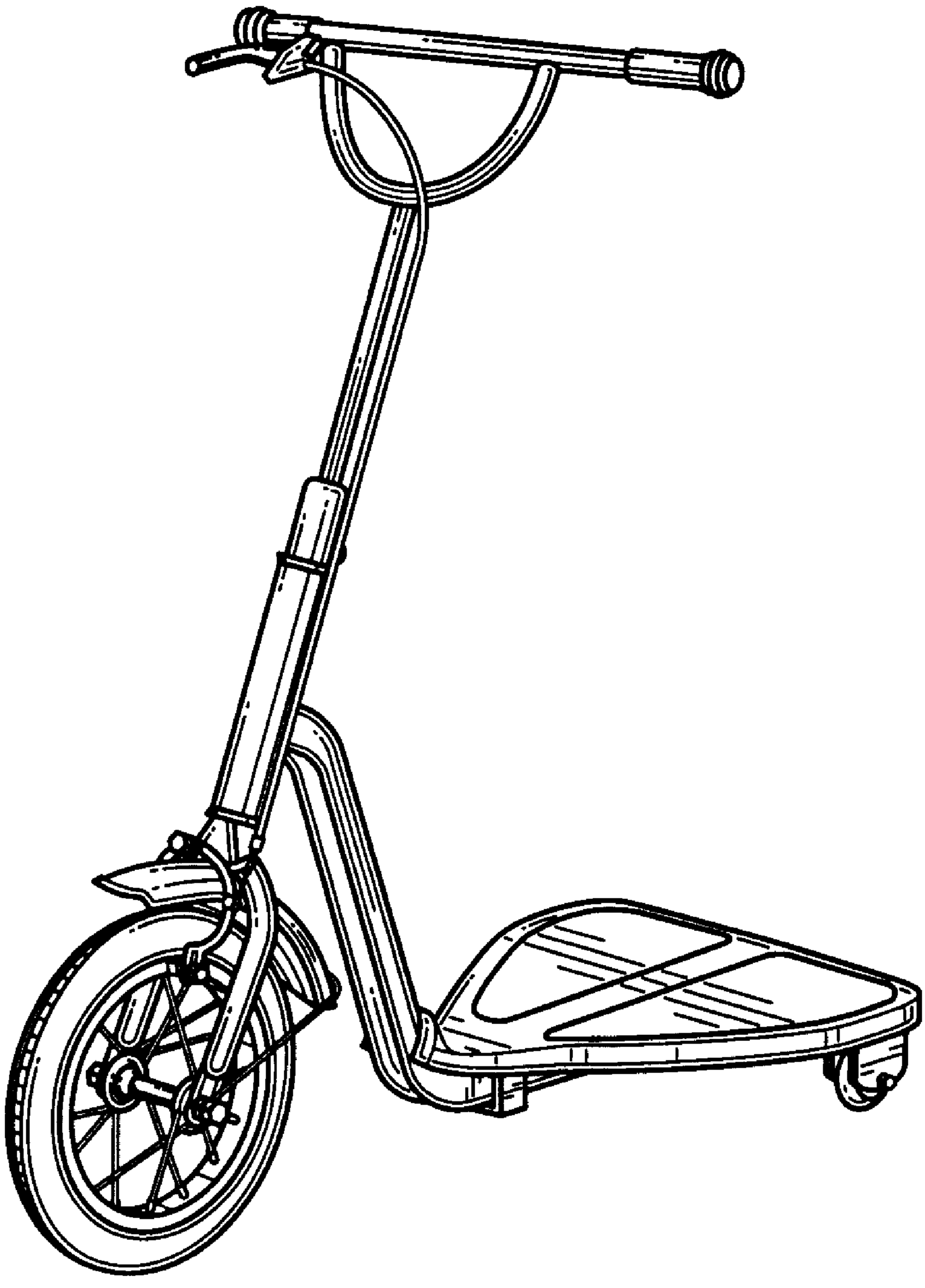

FIG. 1

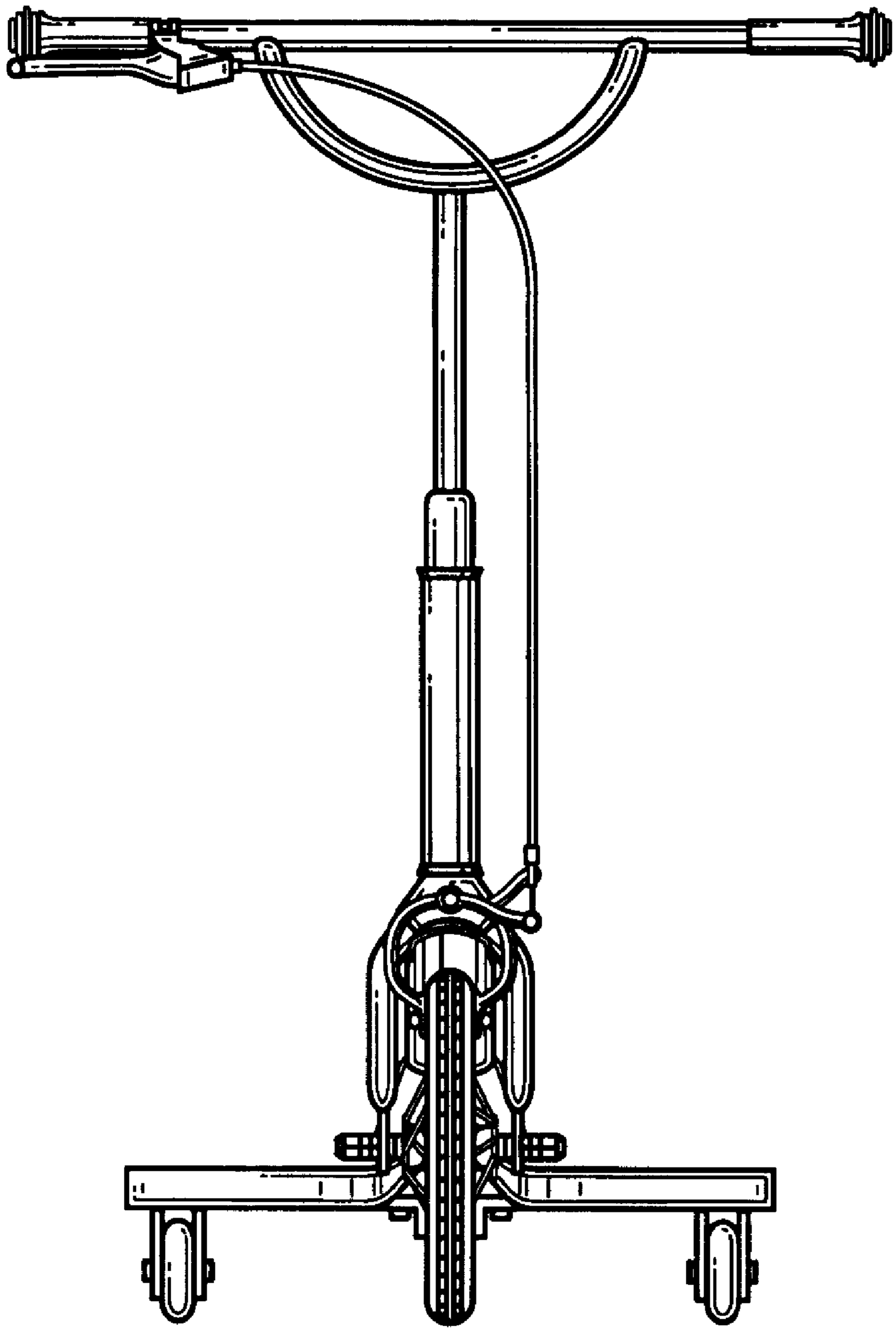

FIG. 2

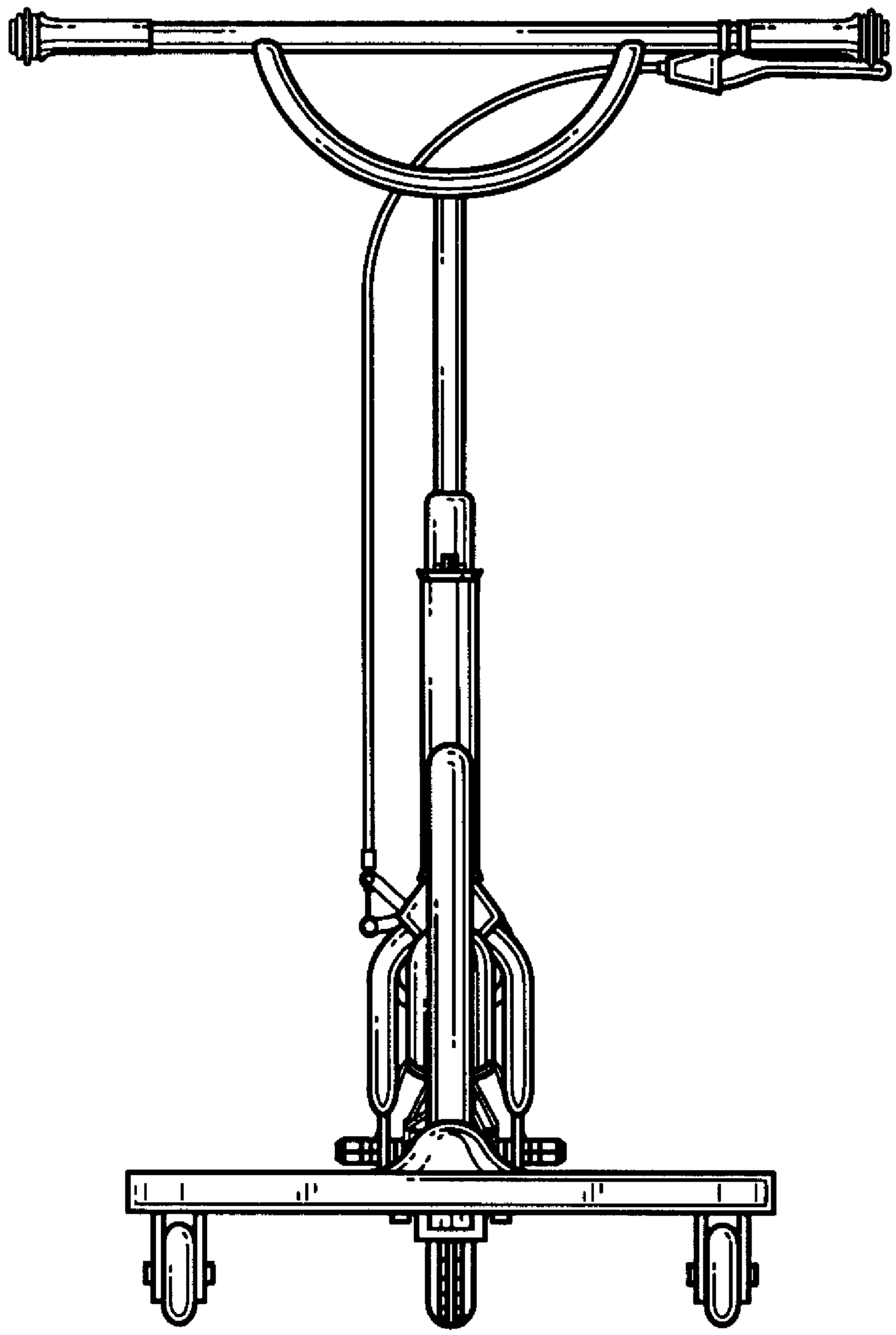

FIG. 3

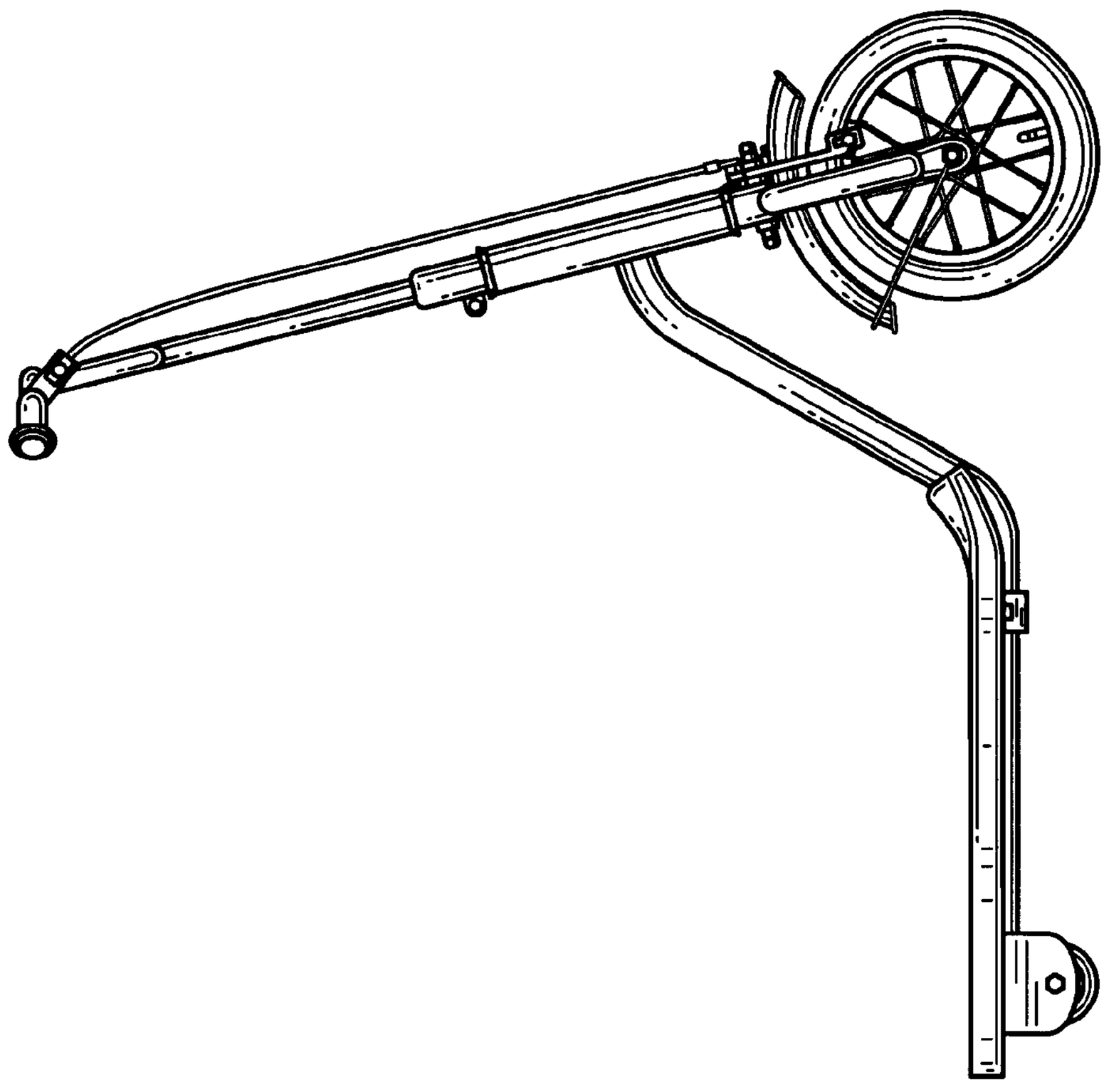

FIG. 4

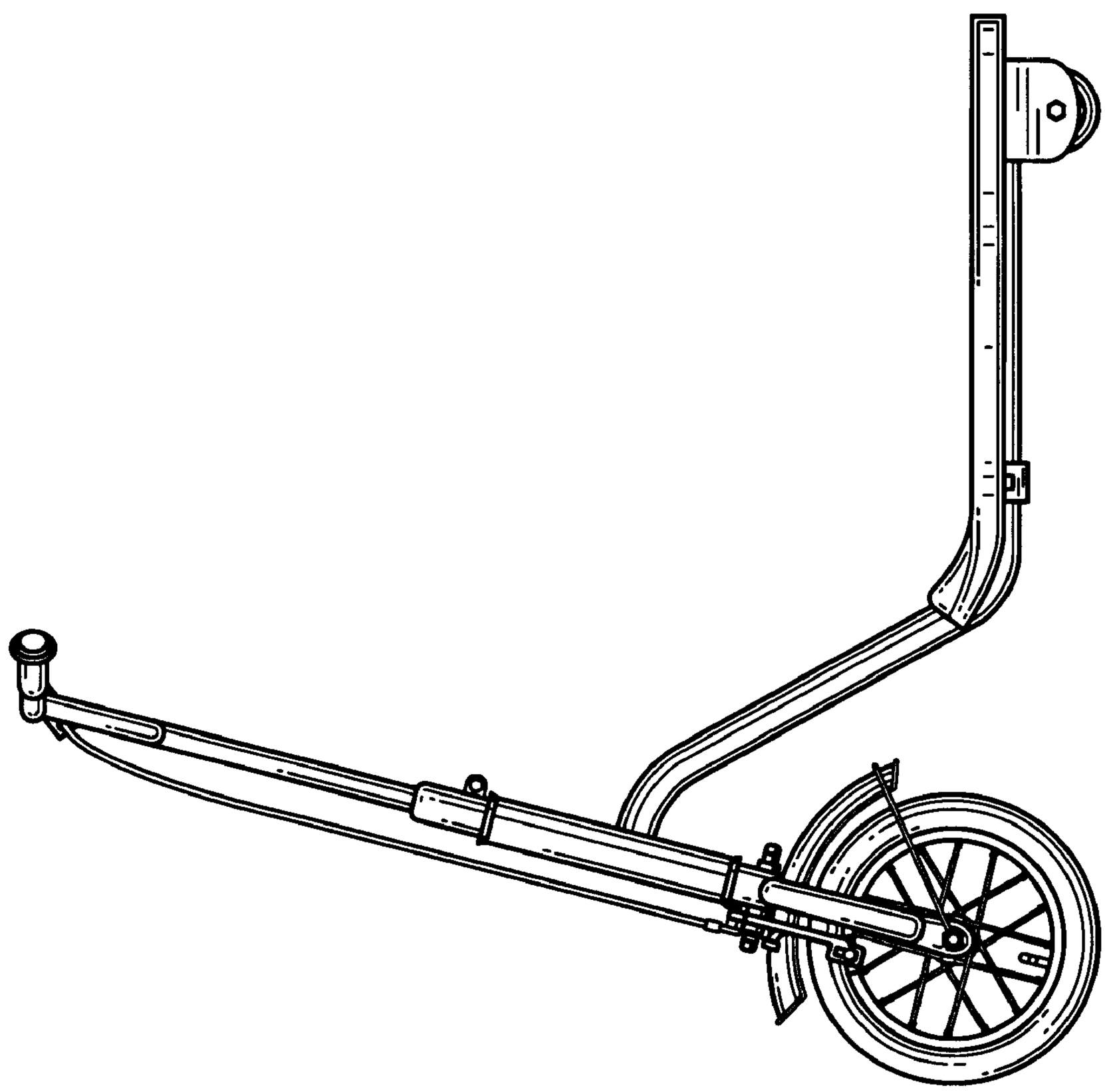

FIG. 5

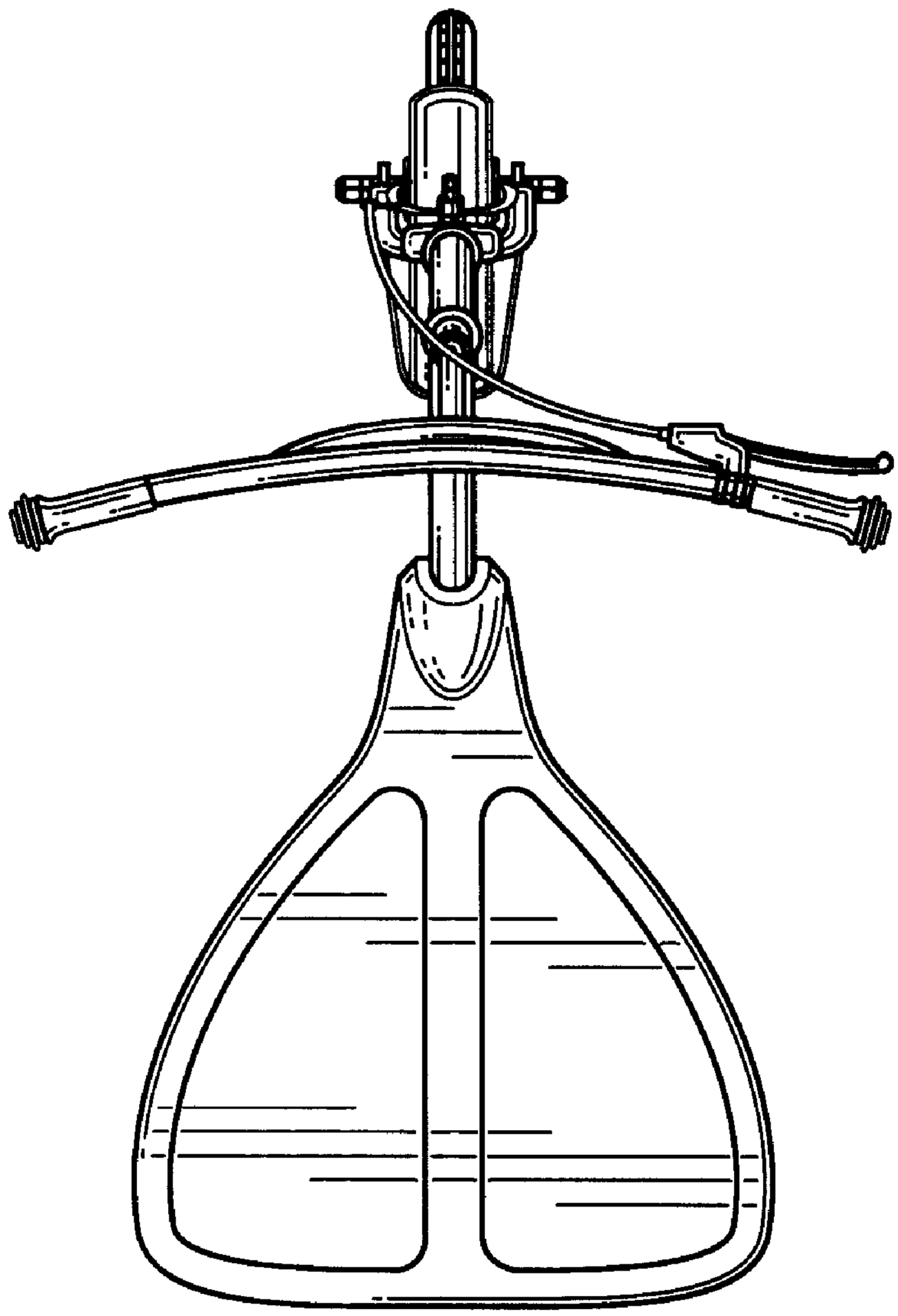

FIG. 6

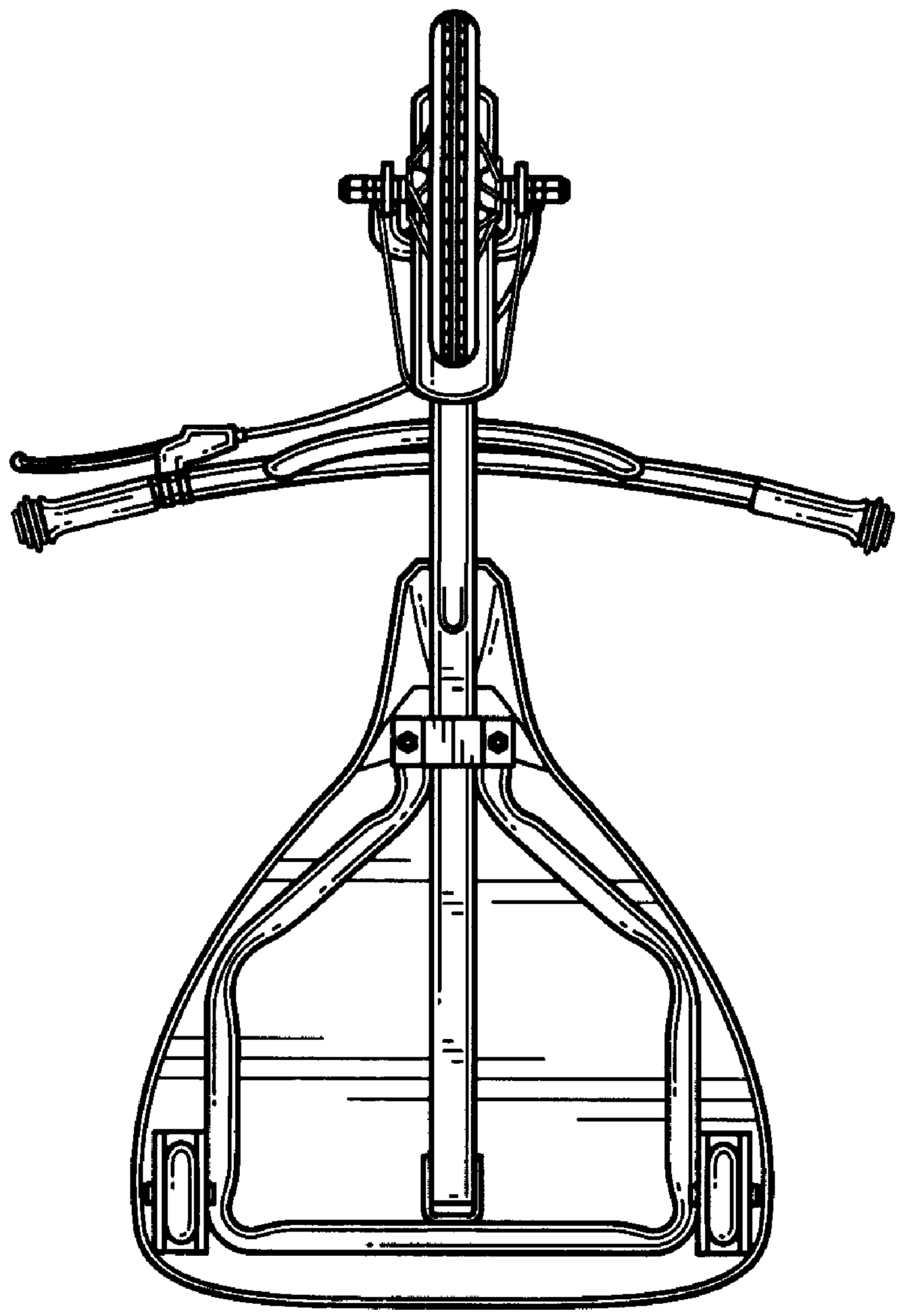

FIG. 7

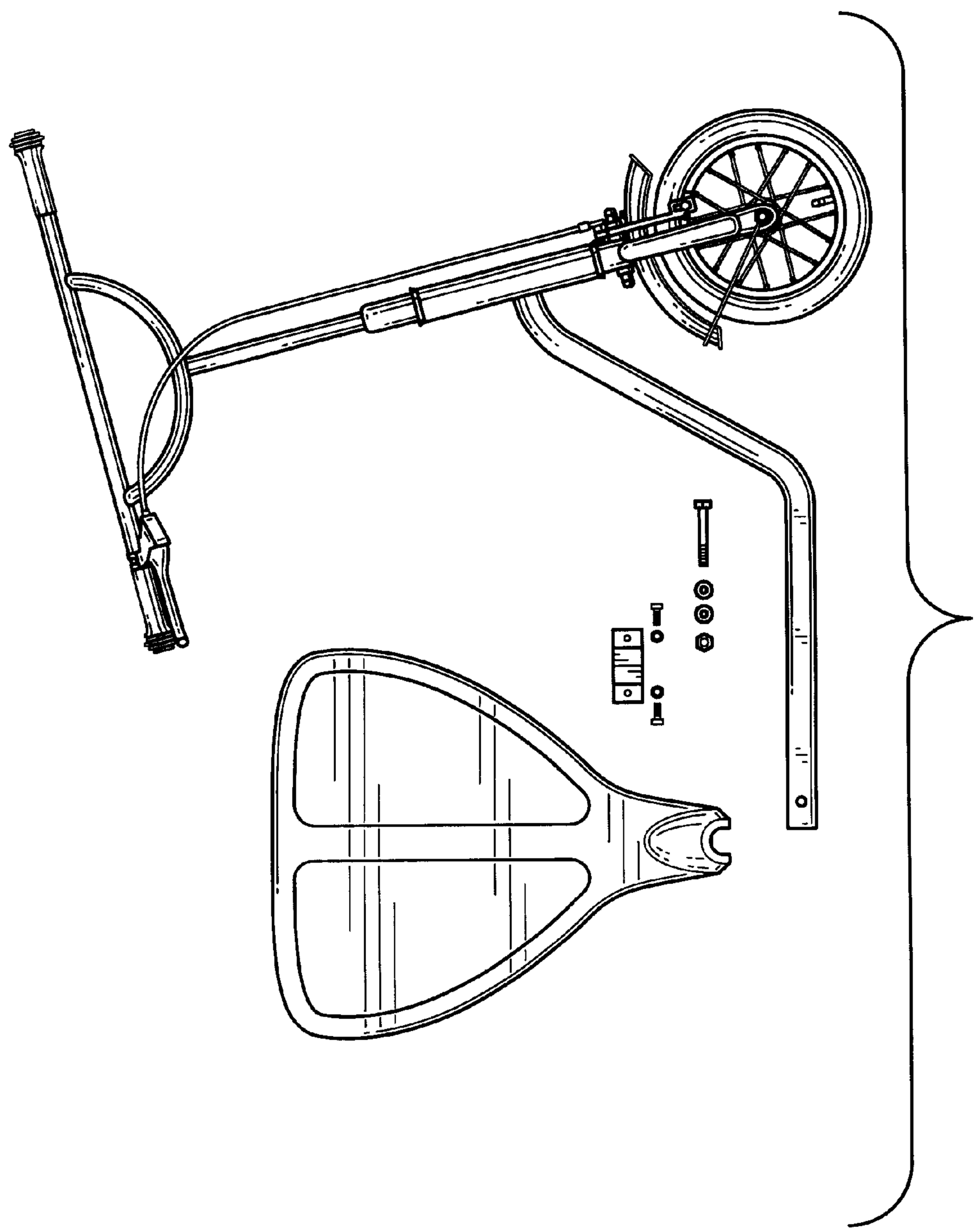

FIG. 8