US00D439666S

(12) United States Design Patent

Ventura

(10) Patent No.: US D439,666 S
(45) Date of Patent: ** Mar. 27, 2001

(54) **STERNUM SAW BLADE**

(75) Inventor: **Joseph Ventura**, Ruckersville, VA (US)

(73) Assignee: **MicroAire Surgical Instruments, Inc.**, Charlottesville, VA (US)

(**) Term: **14 Years**

(21) Appl. No.: **29/116,652**

(22) Filed: **Jan. 10, 2000**

(51) **LOC (7) Cl.** **24-02**
(52) **U.S. Cl.** **D24/146**; D8/20
(58) **Field of Search** D24/146; D8/20, D8/70, 69, 68, 64, 98; 606/176, 177, 178, 171; 30/340, 349, 348, 342, 166.3, 355, 339, 346, 346.5

(56) **References Cited**

U.S. PATENT DOCUMENTS

D. 217,428	*	5/1970	Quedens	D8/70
D. 385,163	*	10/1997	Hutchins et al.	D8/20
D. 415,401	*	10/1999	Imboden et al.	D8/70
4,020,555	*	5/1977	Hedrick	606/177
5,433,457	*	7/1995	Wright	606/177
5,609,603	*	3/1997	Linden	606/177
6,007,541	*	12/1999	Scott	606/177

OTHER PUBLICATIONS

Zimmer Catalog Powered Surgical instruments "Sternum Saw Blade" item 5059–32 p. F21 @1987.*

* cited by examiner

Primary Examiner—Ian Simmons
(74) *Attorney, Agent, or Firm*—McGuireWoods LLP

(57) **CLAIM**

I claim the ornamental design for a sternum saw blade, as shown and described.

DESCRIPTION

FIG. **1** is a side plan view of a sternum saw blade with notches;
FIG. **2** is a bottom plan view of the sternum saw blade with notches;
FIG. **3** is a top plan view of the sternum saw blade with notches;
FIG. **4** is a front plan view of the sternum saw blade with notches;
FIG. **5** is a rear plan view of the sternum saw blade with notches; and,
FIG. **6** is a top elevational view of the sternum saw blade with notches.
The broken line showing is for illustrative purposes only and forms no part of the claimed invention.

1 Claim, 2 Drawing Sheets

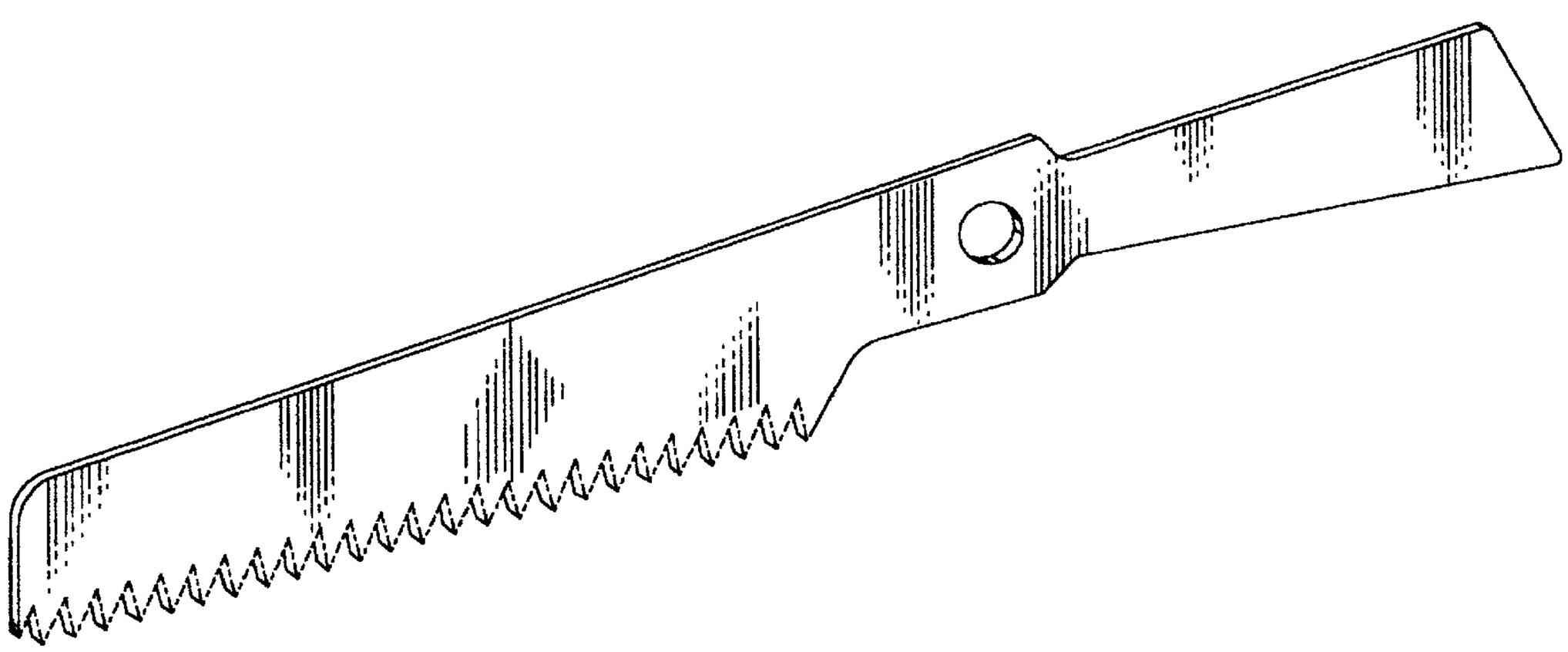

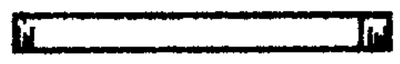

FIG.4

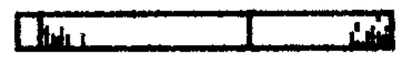

FIG.5

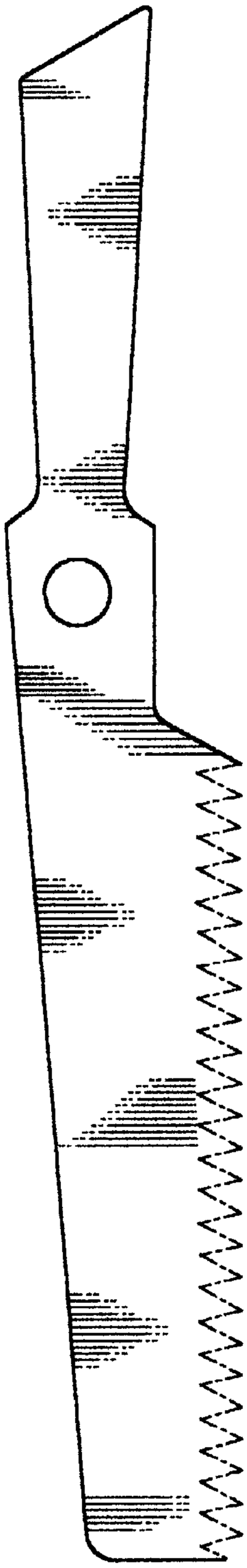

FIG.1

FIG.2

FIG.3

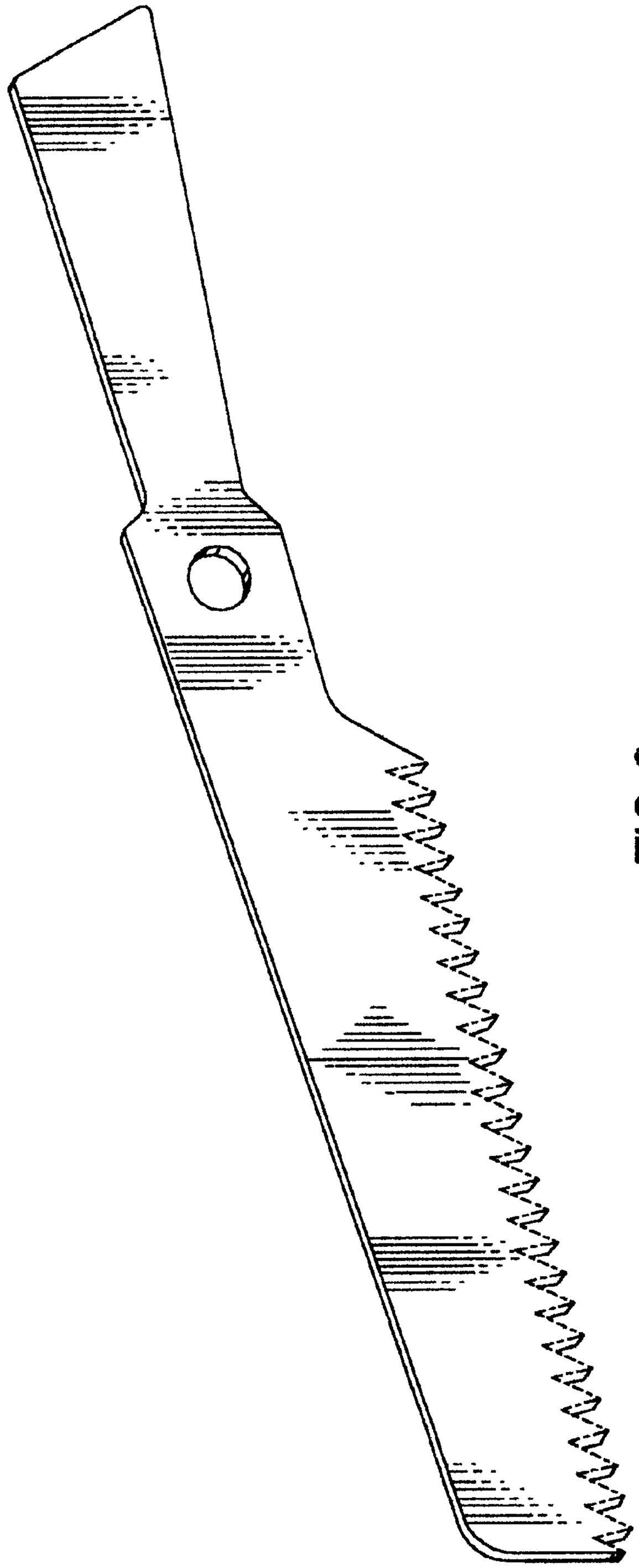

FIG.6