US00D439177S

(12) United States Design Patent

Fandrey et al.

(10) Patent No.: US D439,177 S
(45) Date of Patent: ** Mar. 20, 2001

(54) **PRESSURE TRANSMITTER WITH SINGLE INLET BASE AND ECONOMY HOUSING**

(75) Inventors: **Mark Fandrey**, Eden Prairie; **George C. Hausler**, Maple Grove; **Steven M. Dennis**, Eden Prairie; **William J. Ballot**, New Brighton; **David A. Horky**, Mound, all of MN (US)

(73) Assignee: **Rosemount Inc.**, Eden Prairie, MN (US)

(**) Term: **14 Years**

(21) Appl. No.: **29/120,531**

(22) Filed: **Mar. 21, 2000**

(51) **LOC (7) Cl.** **10-04**
(52) **U.S. Cl.** **D10/85**
(58) **Field of Search** D10/85, 96; 73/700–756

(56) **References Cited**

U.S. PATENT DOCUMENTS

D. 287,827		1/1987	Broden	D10/46
D. 296,995		8/1988	Lee	D10/46
D. 297,314		8/1988	Hedtke	D10/46
D. 297,315		8/1988	Pierce et al.	D10/85
D. 317,266		6/1991	Broden et al.	D10/46
D. 317,269		6/1991	Selg	D10/52
D. 318,432		7/1991	Broden et al.	D10/46
D. 329,619		9/1992	Cartwright	D10/52
D. 342,456		12/1993	Miller et al.	D10/60
D. 358,784		5/1995	Templin, Jr. et al.	D10/96
D. 366,000	*	1/1996	Karas et al.	D10/85
D. 366,218		1/1996	Price et al.	D10/52
5,369,386	*	11/1994	Alden et al.	335/206
5,656,782	*	8/1997	Powell, II et al.	73/756
5,823,228	*	10/1998	Chou	137/597
5,920,016	*	7/1999	Broden	73/756
5,988,203	*	11/1999	Hutton	137/597 X
6,038,927	*	3/2000	Karas	73/706
6,059,254	*	5/2000	Sundet et al.	248/678

FOREIGN PATENT DOCUMENTS

0 903 651 A1 3/1999 (EP) .

OTHER PUBLICATIONS

Product Data Sheet No.: 00813–0100–4378, "Model 751 Field Signal Indicator", by Rosemount Inc., Eden Prairie, Minnesota, (1997).

Product Data Sheet No.: 00813–0100–4731, "APEX™ Radar Gauge", by Rosemount Inc., Eden Prairie, Minnesota, (1998).

Product Data Sheet No.: 00813–0100–4640, "Model 3201 Hydrostatic Interface Unit", from the Rosemount Comprehensive Product Catalog, published 1998, by Rosemount Inc., Eden Prairie, Minnesota.

Product Data Sheet No.: 00813–0100–4003, "Model 8800A", by Rosemount Inc., Eden Prairie, Minnesota, (1998).

Product Data Sheet No.: 00813–0100–4773, "Model 8742C—Magnetic Flowmeter Transmitter with Foundation™ Fieldbus", from the Rosemount Comprehensive Product Catalog, published 1998, by Rosemount Inc., Eden Prairie, Minnesota.

Product Data Sheet No.: 00813–0100–4690, "Model 2088 Economical Smart Pressure Transmitter", by Rosemount Inc., Eden Prairie, Minnesota, (1998).

(List continued on next page.)

Primary Examiner—Antoine Duval Davis
(74) *Attorney, Agent, or Firm*—Westman, Champlin & Kelly, P.A.

(57) **CLAIM**

The ornamental design for a pressure transmitter with single inlet base and economy housing, as shown and described.

DESCRIPTION

FIG. **1** is a perspective view;
FIG. **2** is a top plan view;
FIG. **3** is a front elevational view;
FIG. **4** is a right side view;
FIG. **5** is a left side view;
FIG. **6** is a rear elevational view; and,
FIG. **7** is a bottom plan view.

1 Claim, 7 Drawing Sheets

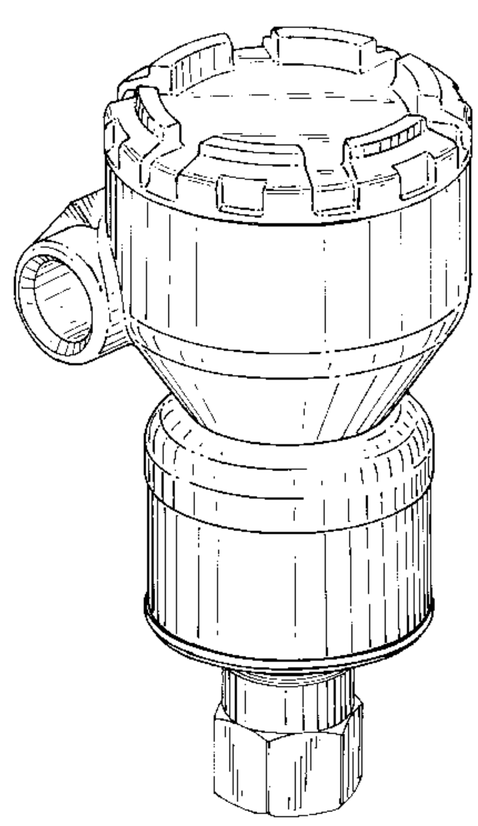

OTHER PUBLICATIONS

Product Data Sheet No.: 00813–0100–4592, "Model 2024 Differential Pressure Transmitter", by Rosemount Inc., Eden Prairie, Minnesota, (1987–1995).
Product Data Sheet No.: 00813–0100–4360, "Model 1151 Alphaline® Pressure Transmitters", by Rosemount Inc., Eden Prairie, Minnesota, (1998).
Product Data Sheet No.: 00813–0100–4458, "Model 1135F Pressure–to–Current Converter", by Rosemount Inc., Eden Prairie, Minnesota, (1983, 1986, 1994).
Rosemount Model 8732C Magnetic Flowmeter Transmitter, by Rosemount Inc., Eden Prairie, Minnesota, (1998).
Product Data Sheet No.: 00813–0100–4263, "Model 444 Alphaline® Temperature Transmitters", by Rosemount Inc., Eden Prairie, Minnesota, (1997).
Product Data Sheet No.: 00813–0100–4769, "Model 3244MV Multivariable Temperature Transmitter with Foundation™ Fieldbus", by Rosemount Inc., Eden Prairie, Minnesota, (1998).
Product Data Sheet No.: 00813–0100–4724, "Models 3144 and 3244MV Smart Temperature Transmitters", by Rosemount Inc., Eden Prairie, Minnesota, (1998).

Product Data Sheet No.: 00813–0100–4738, "Model 3095FB Multivariable™ Transmitter with Modbus™ Protocol", by Rosemount Inc., Eden Prairie, Minnesota, (1996, 1997).

Product Data Sheet No.: 00813–0100–4001, "Model 3051 Digital Pressure Transmitter for Pressure, Flow, and Level Measurement", by Rosemount Inc., Eden Prairie, Minnesota, (1998).

Product Data Sheet No.: 00813–0100–4698, "Model 2090F Sanitary Pressure Transmitter", by Rosemount Inc., Eden Prairie, Minnesota, (1998).

* cited by examiner

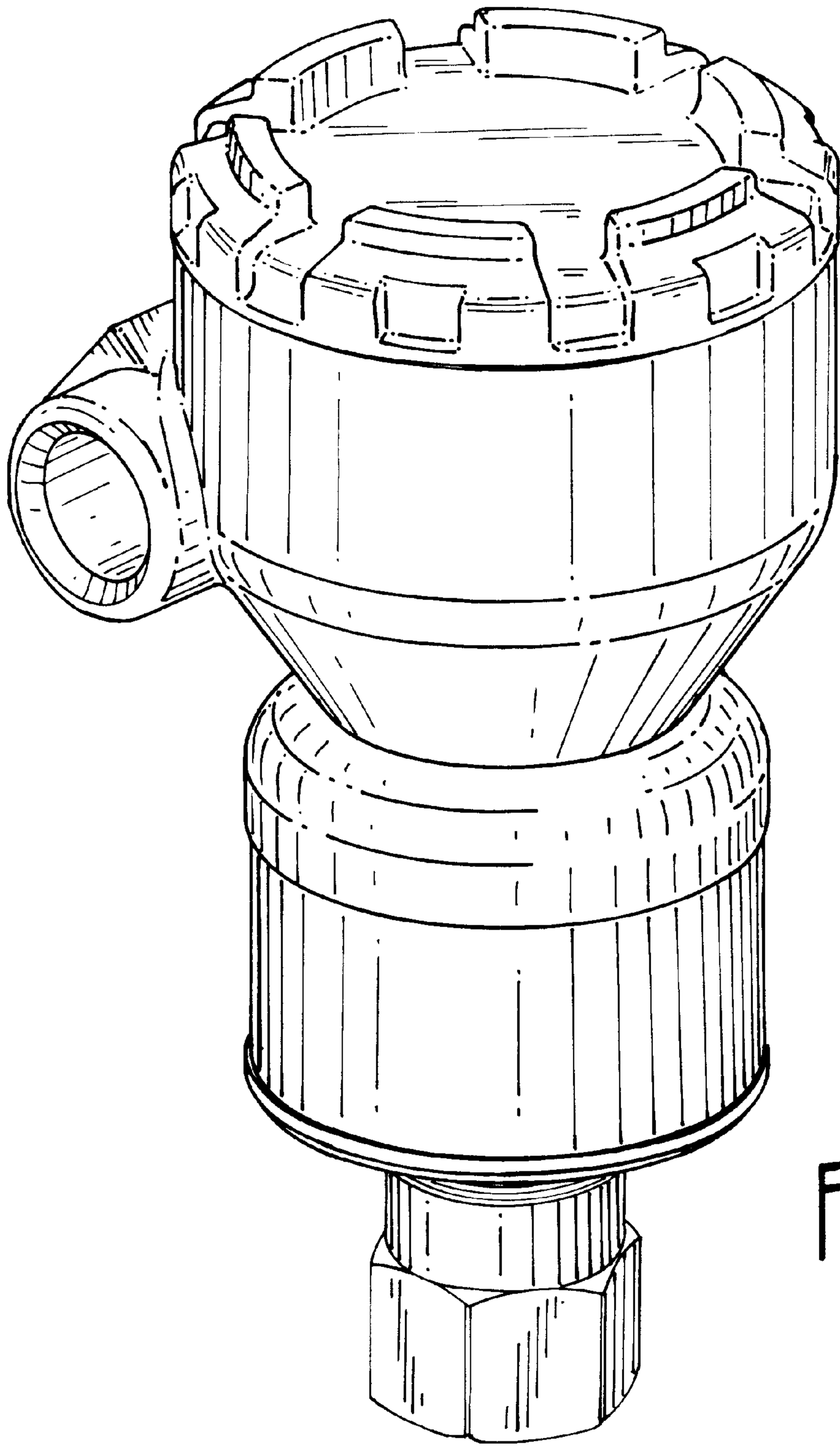

FIG. 1

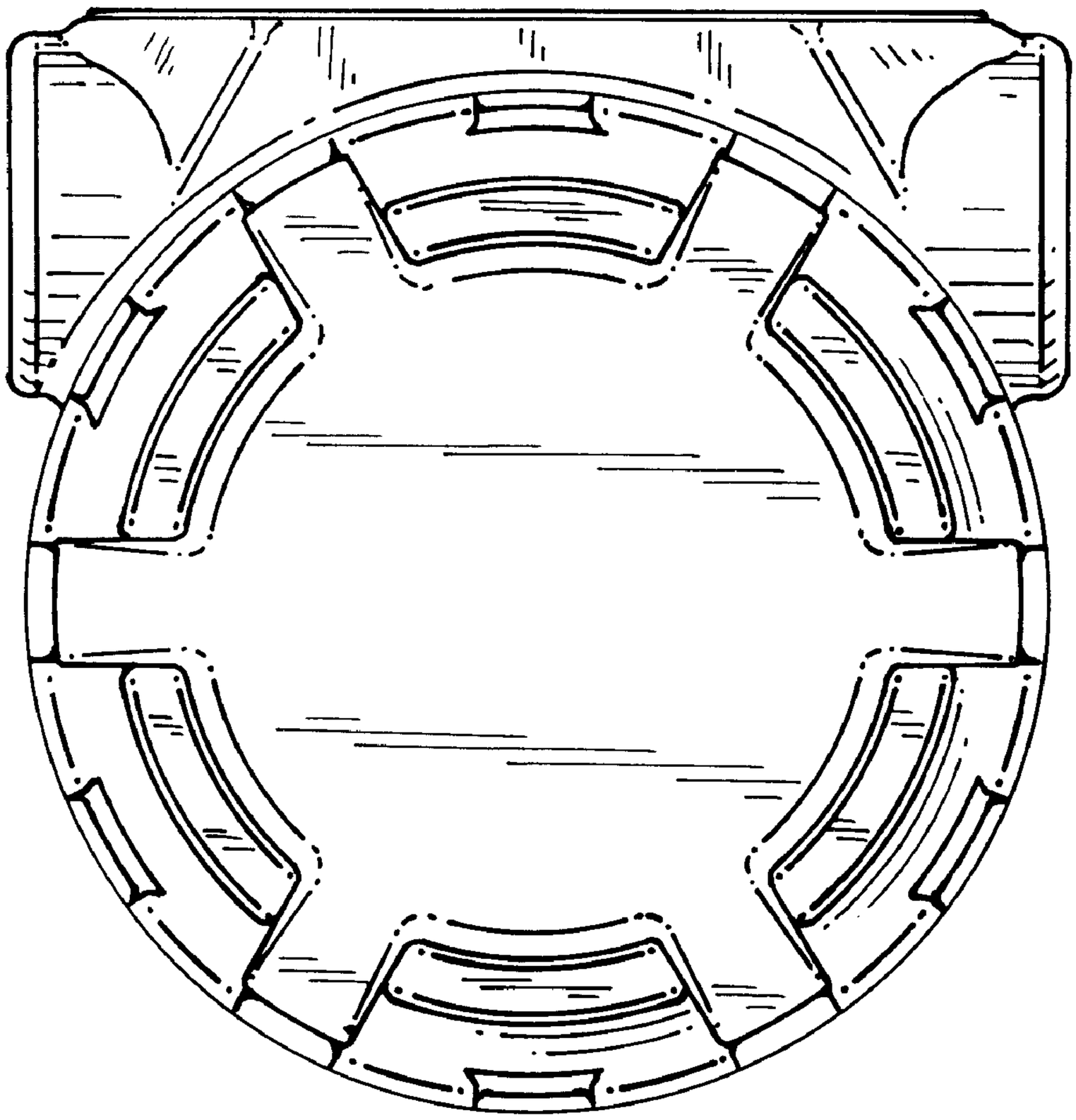

FIG. 2

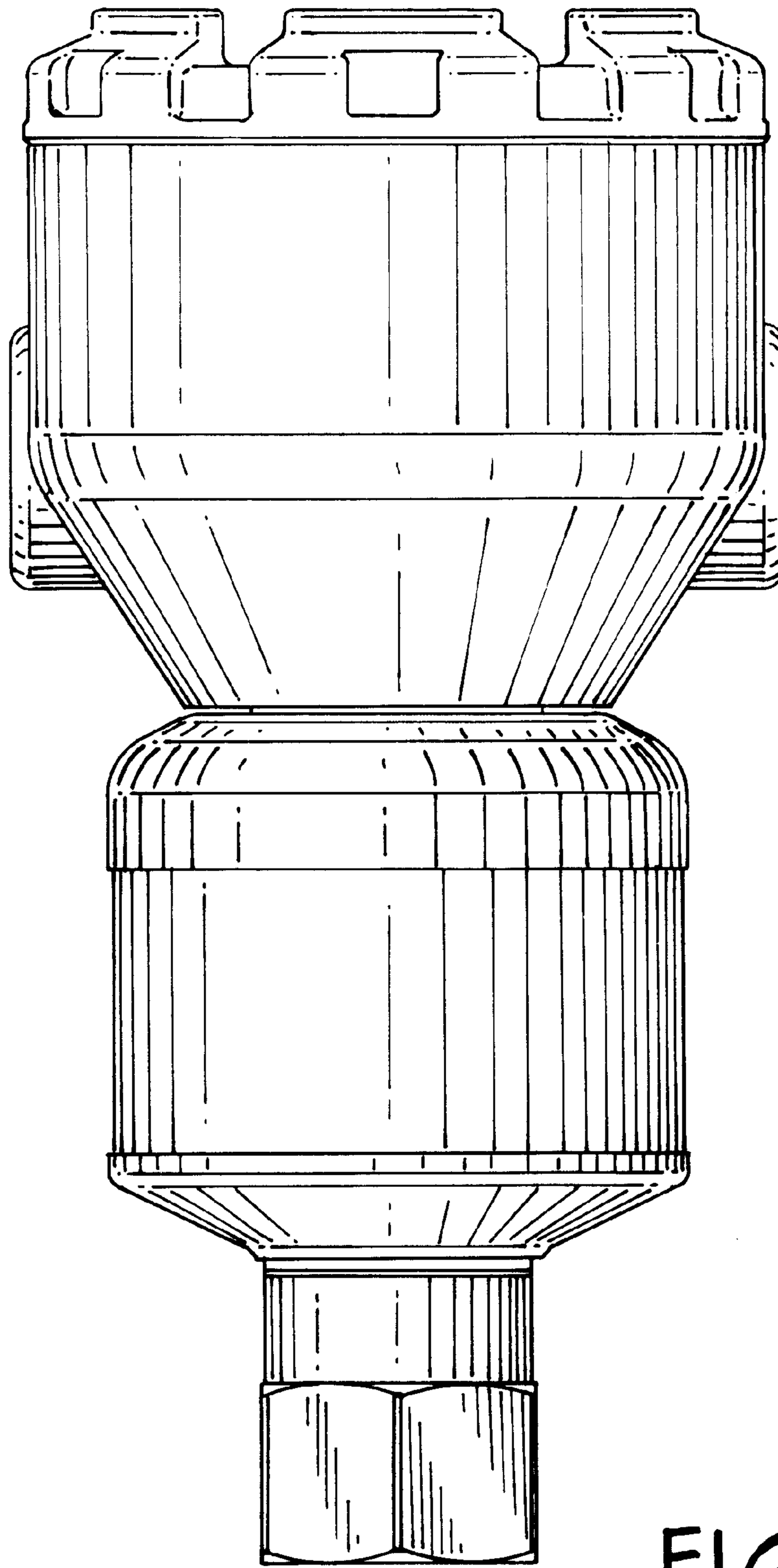

FIG. 3

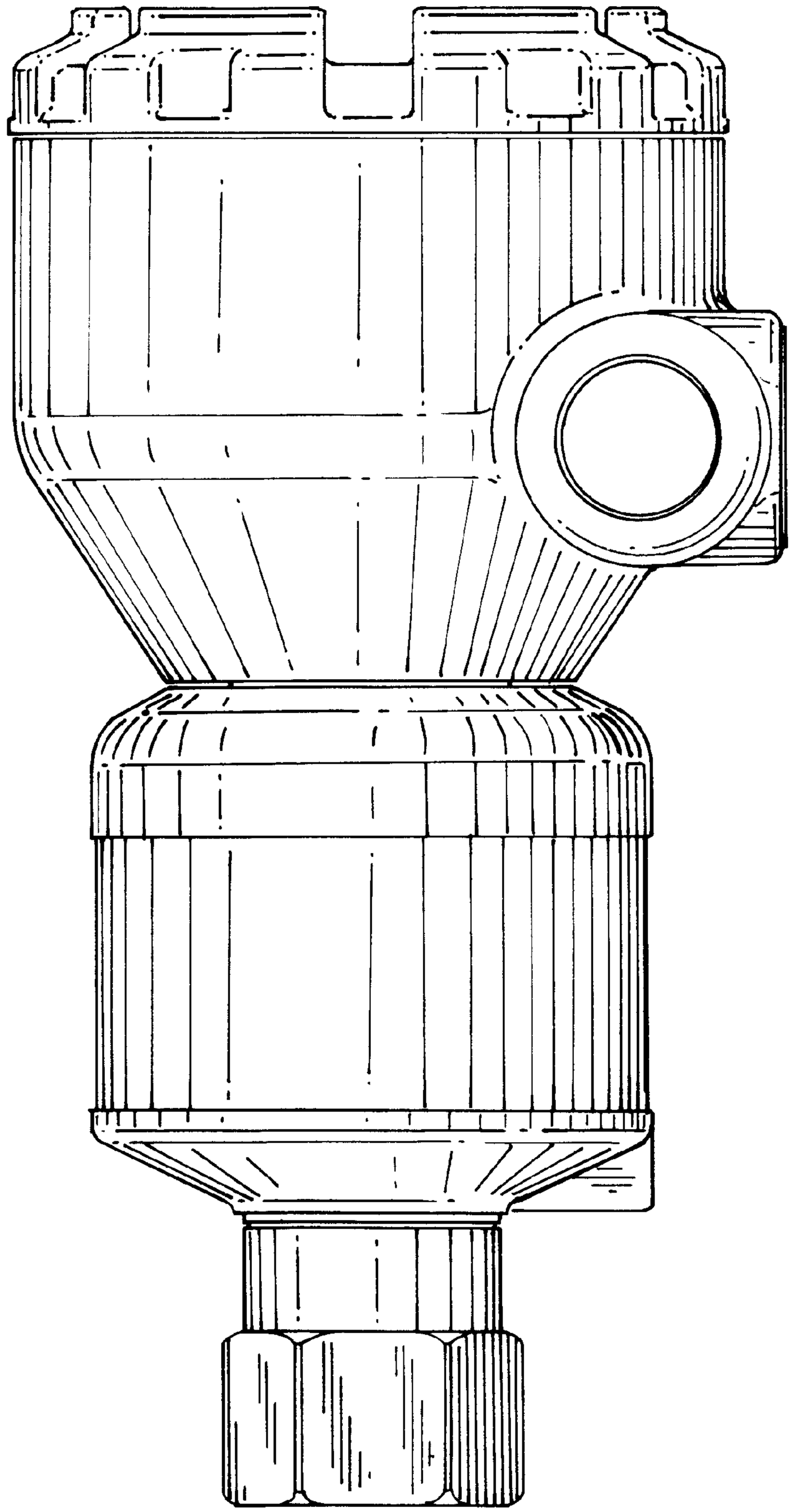

FIG. 4

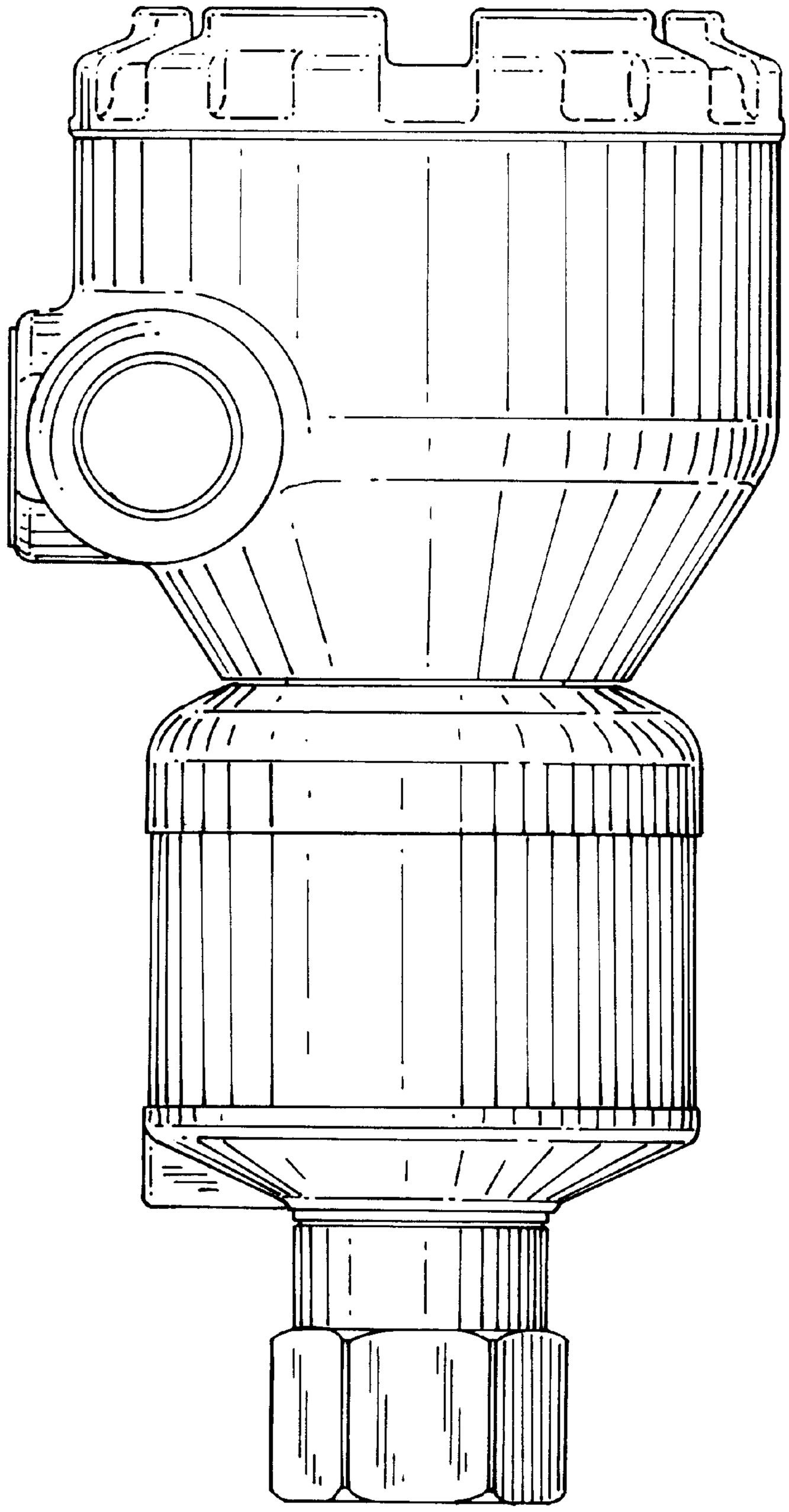

FIG. 5

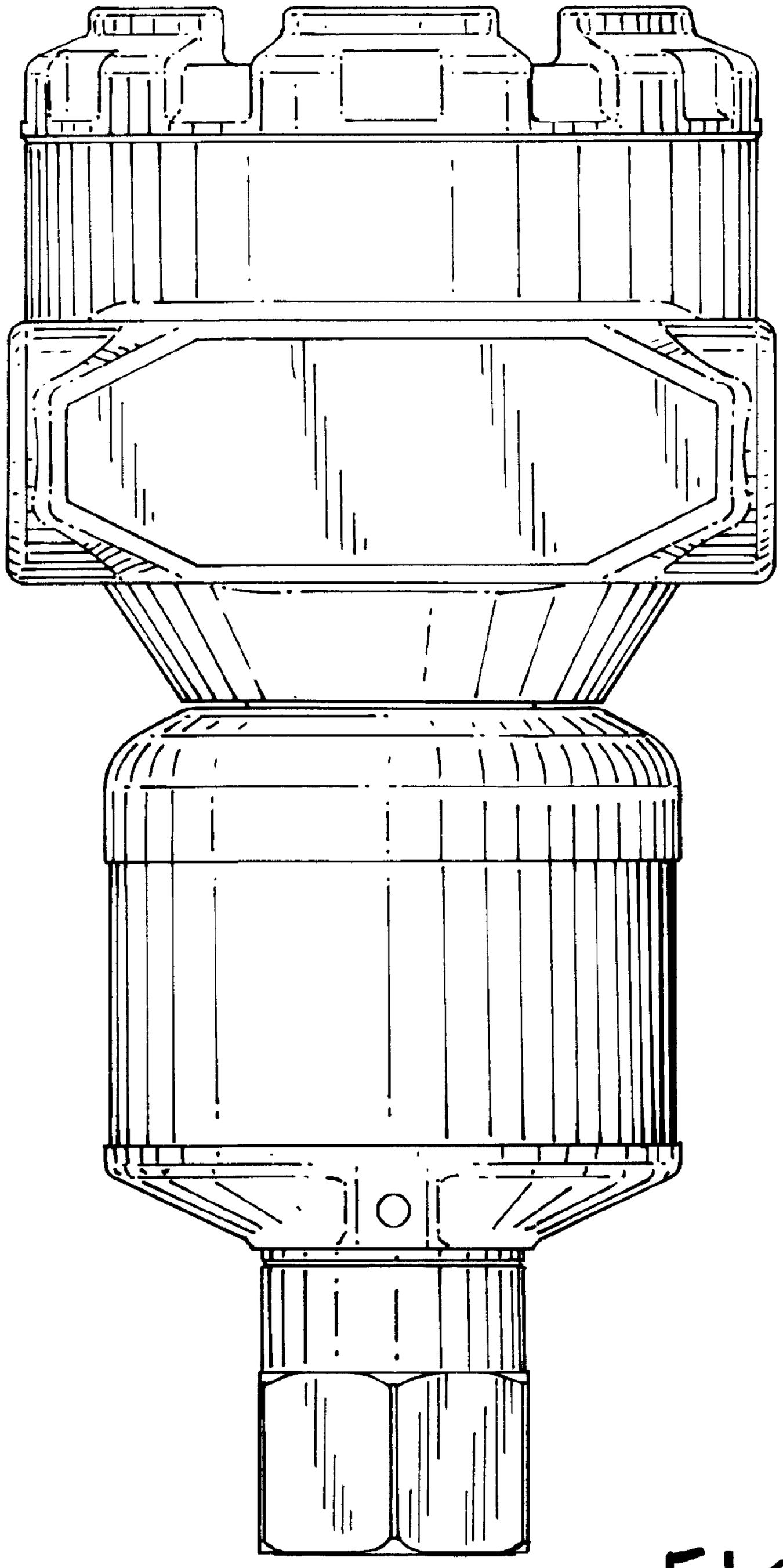

FIG. 6

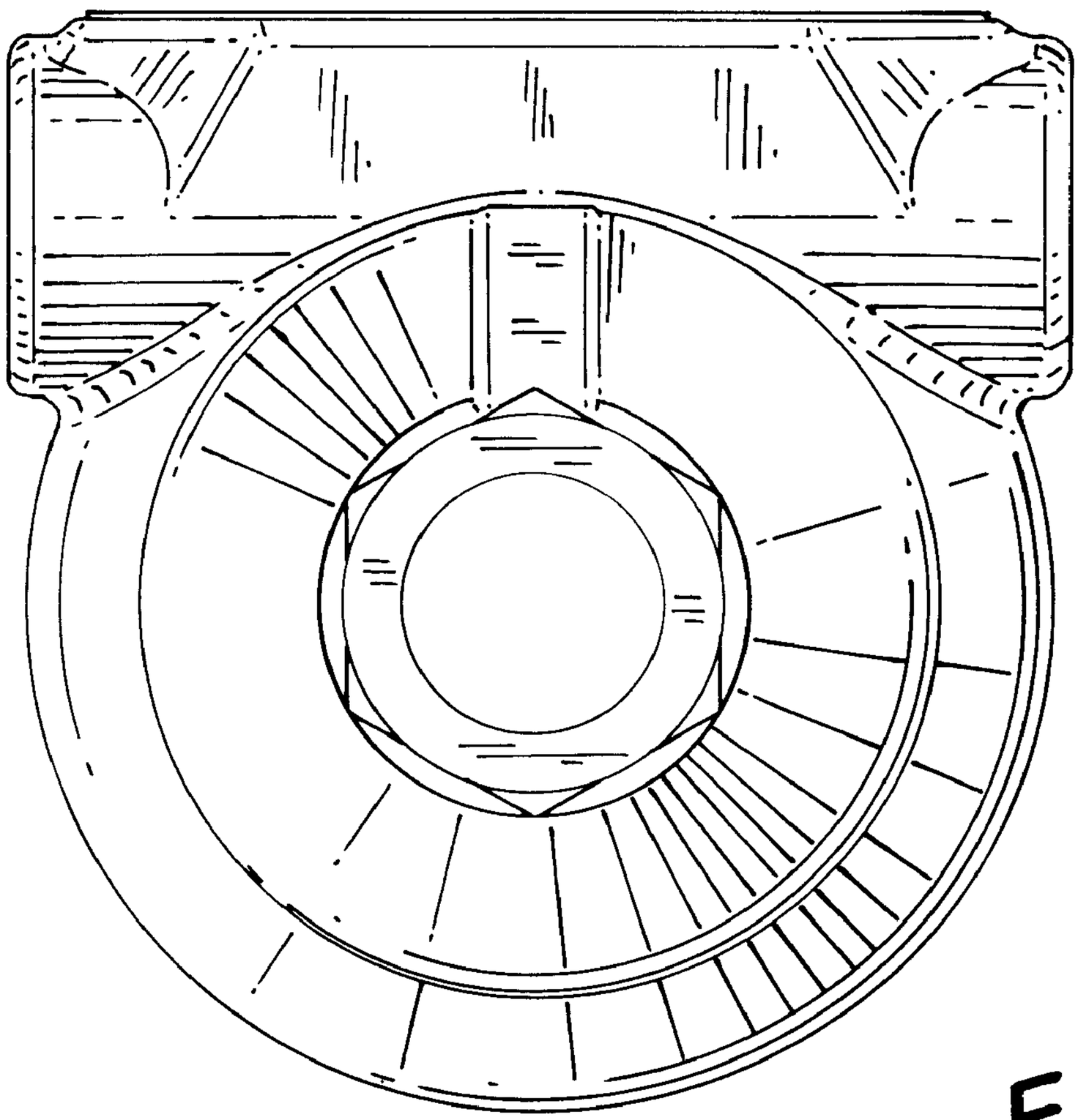

FIG. 7