US00D438862S

(12) United States Design Patent

Brandenberg

(10) Patent No.: US D438,862 S
(45) Date of Patent: ** Mar. 13, 2001

(54) **INTERNET PERSONAL ACCESS DEVICE**

(75) Inventor: **Peter Wyatt Brandenberg**, Thousand Oakes, CA (US)

(73) Assignee: **Netpliance, Inc.**, Austin, TX (US)

(**) Term: **14 Years**

(21) Appl. No.: **29/118,511**

(22) Filed: **Feb. 10, 2000**

(51) **LOC (7) Cl.** **14-02**
(52) **U.S. Cl.** **D14/336**; D14/375
(58) **Field of Search** D14/336, 371, D14/374, 375, 377, 126–129; 341/12; 345/104, 133, 156, 168, 173; 348/180, 184, 325, 739

(56) **References Cited**

U.S. PATENT DOCUMENTS

D. 394,048 * 5/1998 Lee D14/375
D. 413,586 * 9/1999 Kondo D14/375
D. 413,870 * 9/1999 Kuo D14/375

* cited by examiner

Primary Examiner—Freda Nunn
(74) *Attorney, Agent, or Firm*—Baker Botts L.L.P.

(57) **CLAIM**

The ornamental design for an internet personal access device, as shown and described.

DESCRIPTION

FIG. **1** is a front perspective view of an internet personal access device showing our new design;
FIG. **2** is a front view thereof;
FIG. **3** is a first side view thereof;
FIG. **4** is a back view thereof;
FIG. **5** is a second side view thereof;
FIG. **6** is a top view thereof; and,
FIG. **7** is side view thereof with the display shown tilted.
The broken lines are shown in the views for illustrative purposes only and form no part of the claimed design.

1 Claim, 4 Drawing Sheets

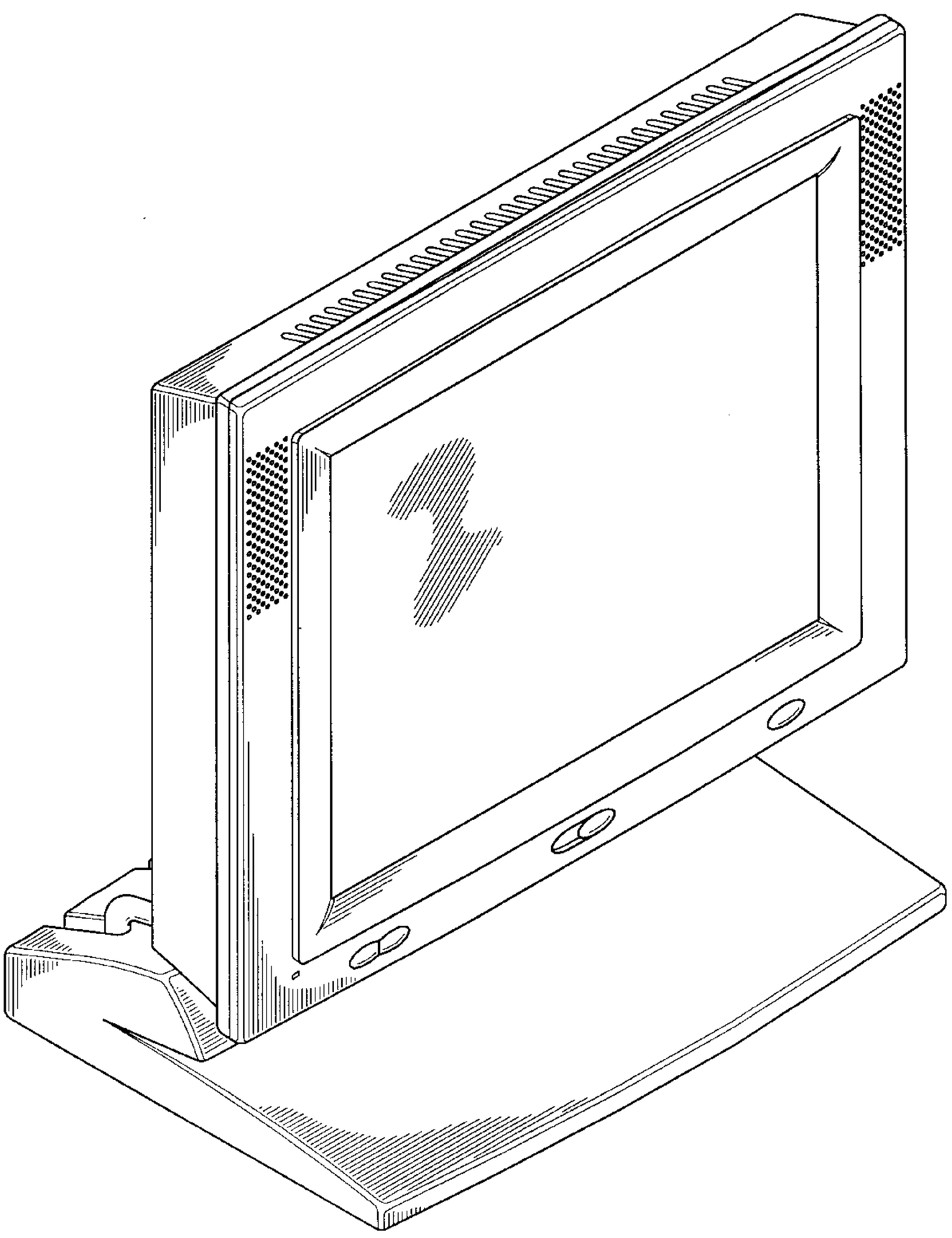

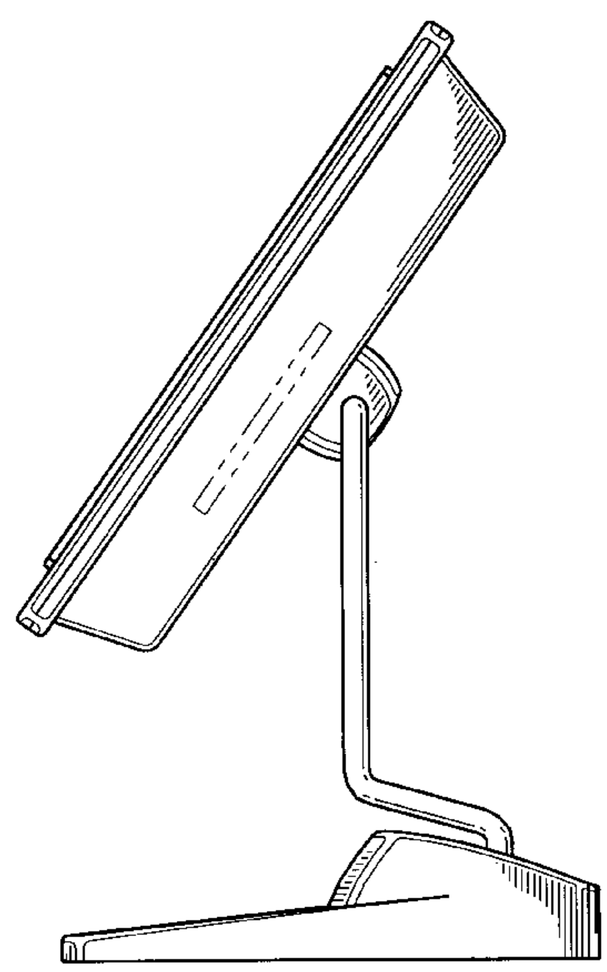

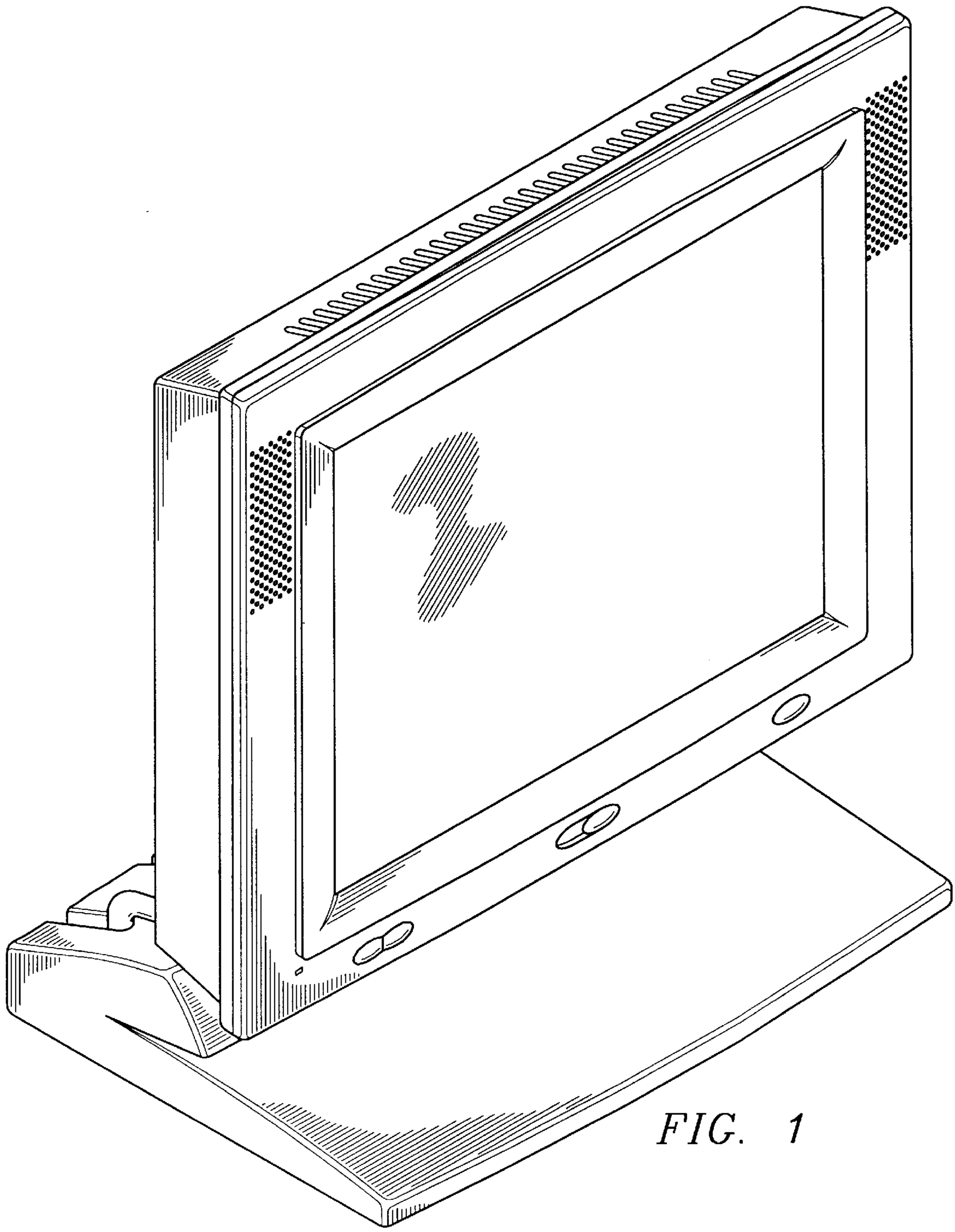

FIG. 1

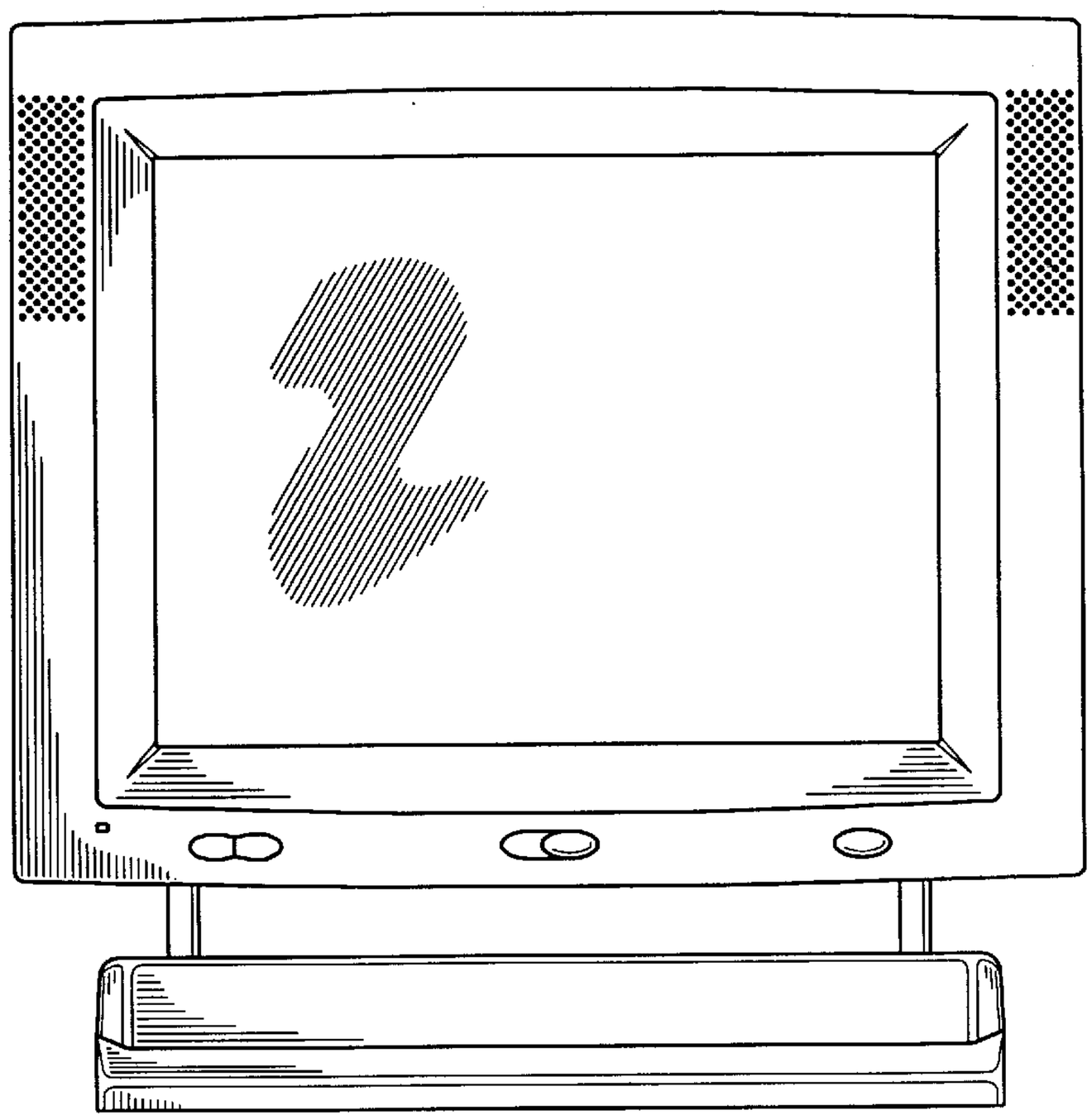

FIG. 2

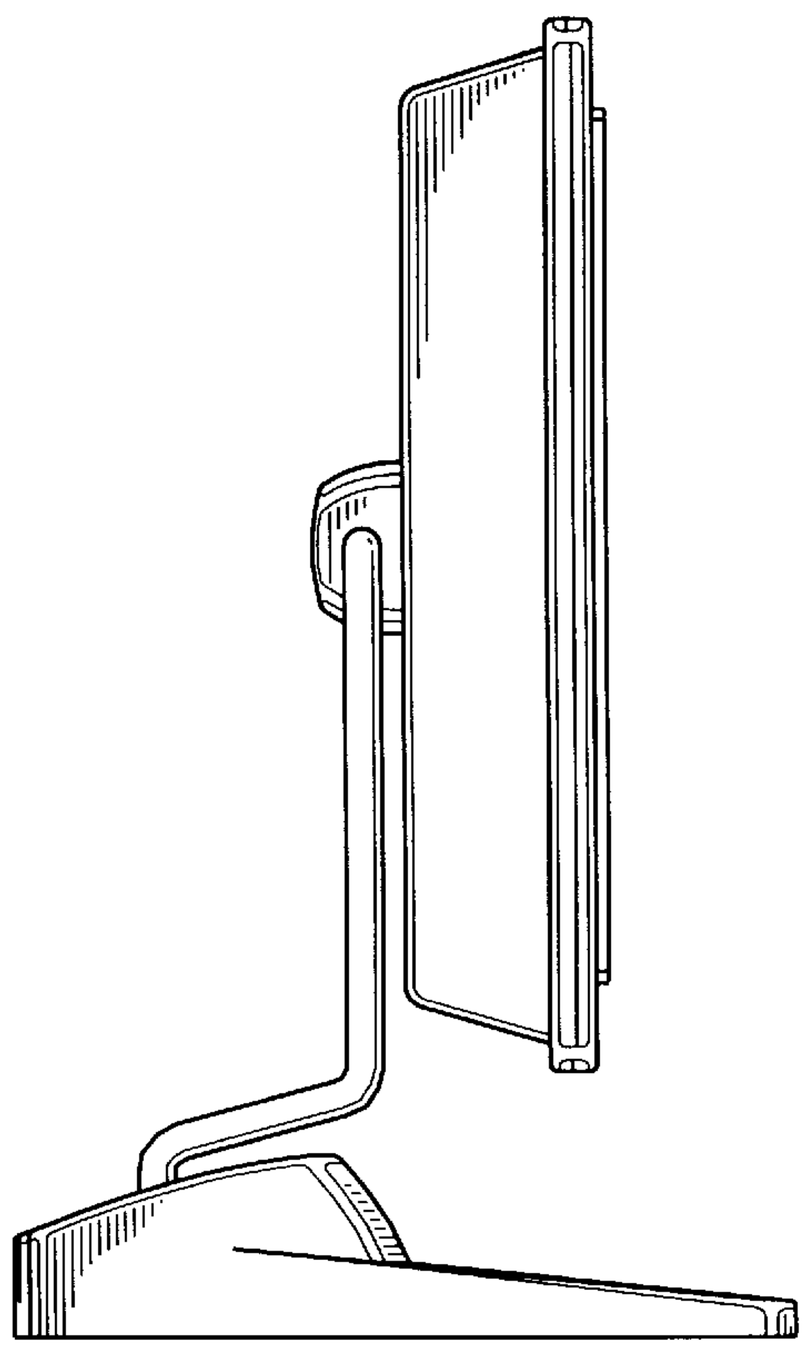

FIG. 3

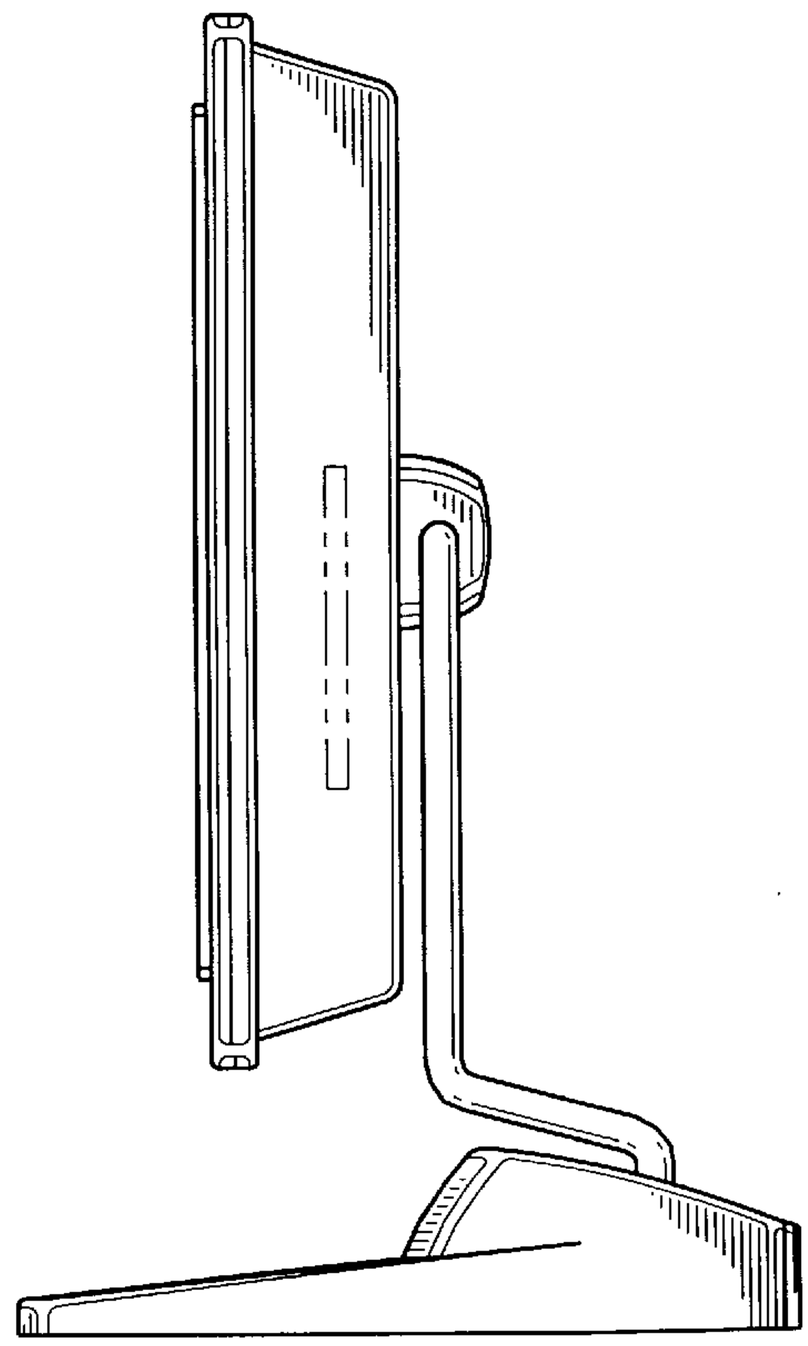

FIG. 5

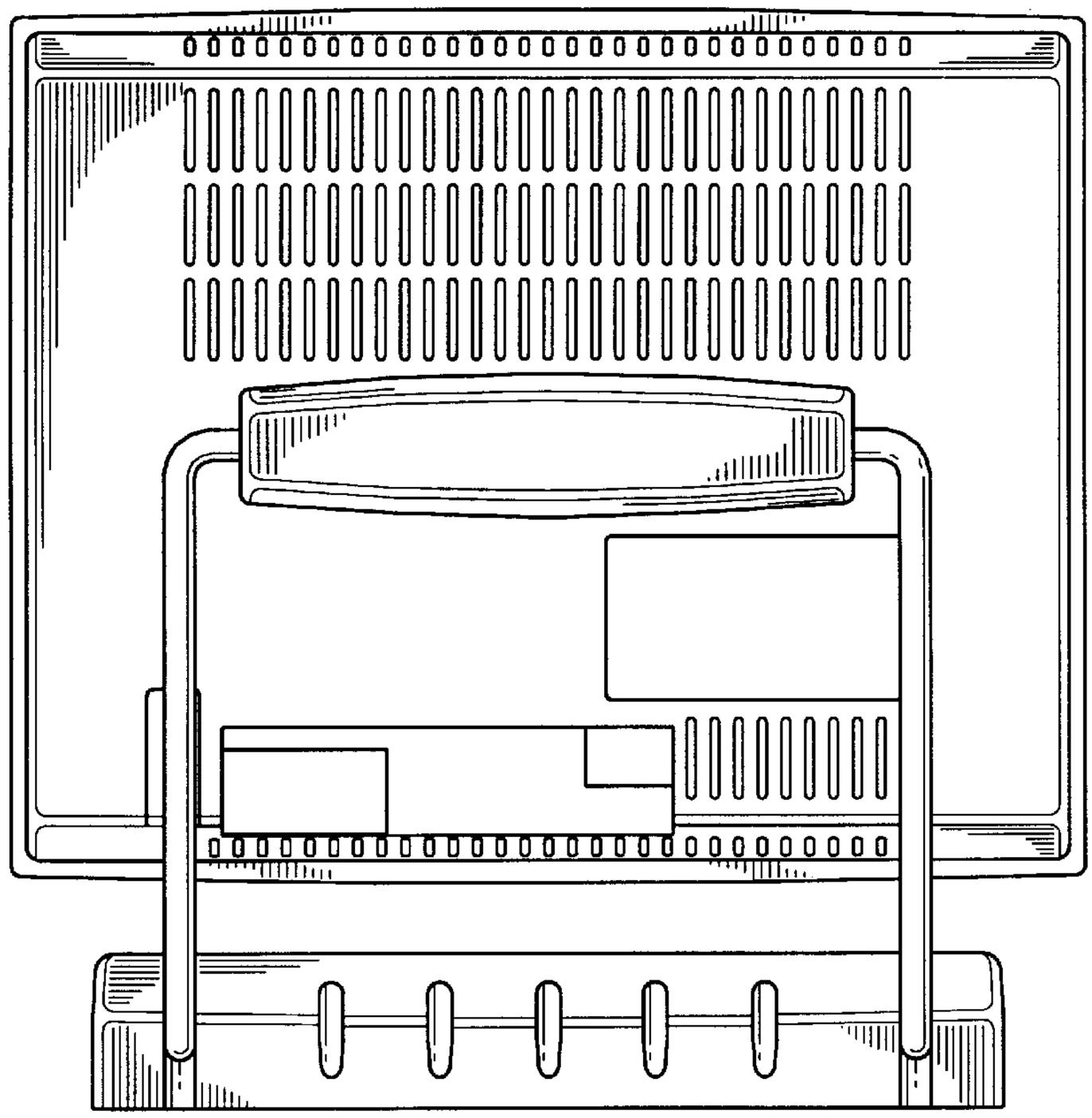

FIG. 4

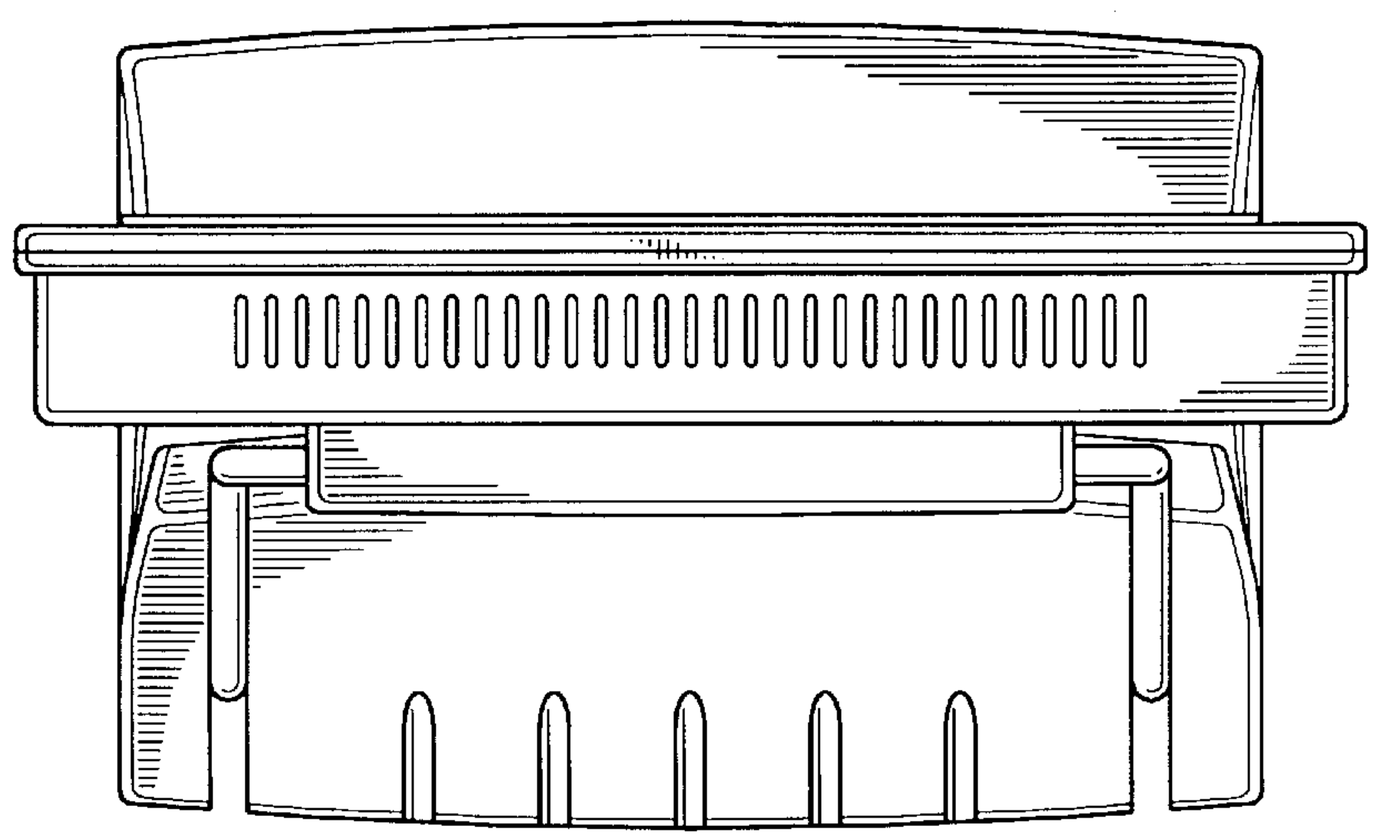

FIG. 6

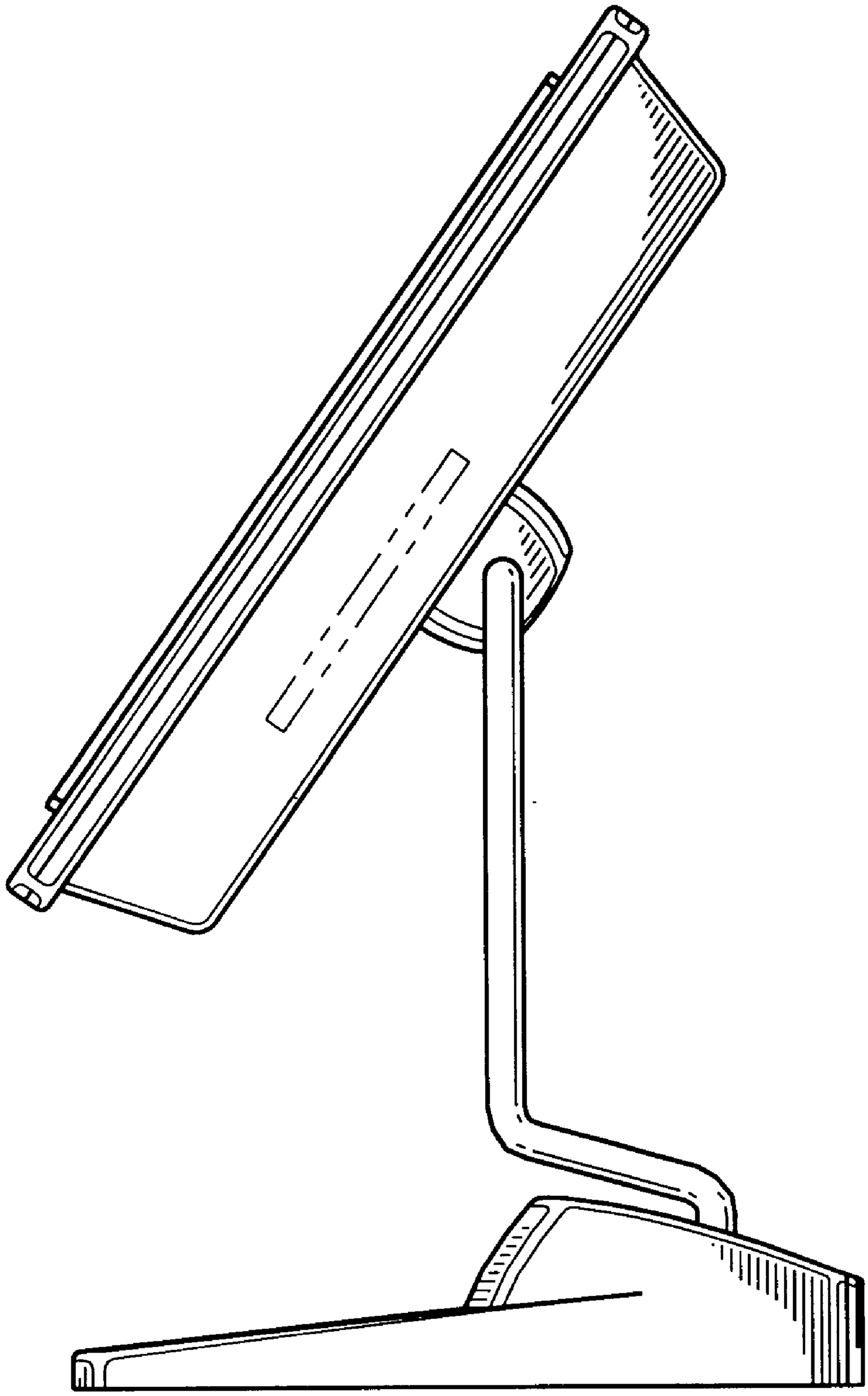

FIG. 7