US00D438740S

(12) United States Design Patent

Donnell

(10) Patent No.: US D438,740 S
(45) Date of Patent: ** Mar. 13, 2001

(54) **CONTAINER AND DISPENSER FOR LIQUID**

(76) Inventor: **Gregory J. Donnell**, R.D. 1 Box 245D, Franklin, NY (US) 13775

(**) Term: **14 Years**

(21) Appl. No.: **29/116,759**

(22) Filed: **Jan. 10, 2000**

(51) **LOC (7) Cl.** **23-02**
(52) **U.S. Cl.** **D6/542**
(58) **Field of Search** D6/542, 524; 206/77.1, 206/207–210; 222/173; 248/309.1; 224/400; 211/74, 13.1

(56) **References Cited**

U.S. PATENT DOCUMENTS

D. 247,940 * 5/1978 Tobin D6/542
D. 293,352 * 12/1987 Calkin D21/630
D. 341,973 * 12/1993 Gerstmar D6/542
4,754,883 * 7/1988 Grzywa 224/400

OTHER PUBLICATIONS

Vahann Catlaogue p. 15 Modular Bath Set (1981).*

* cited by examiner

Primary Examiner—Brian N. Vinson

(74) *Attorney, Agent, or Firm*—George R. McGuire; Hancock & Estabrook, LLP

(57) **CLAIM**

The ornamental design for a container and dispenser for liquid, as shown and described.

DESCRIPTION

FIG. **1** is a perspective view illustrating my new design for a container and dispenser for a liquid, with the tray, cap and straw being shown in phantom for illustrative purposes only and forms no part of the claimed design;

FIG. **2** is a front elevational view thereof;

FIG. **3** is a top plan view thereof;

FIG. **4** is a rear elevational view thereof;

FIG. **5** is a right side elevational view thereof;

FIG. **6** is a bottom plan view thereof; and,

FIG. **7** is a left side elevational view thereof.

1 Claim, 4 Drawing Sheets

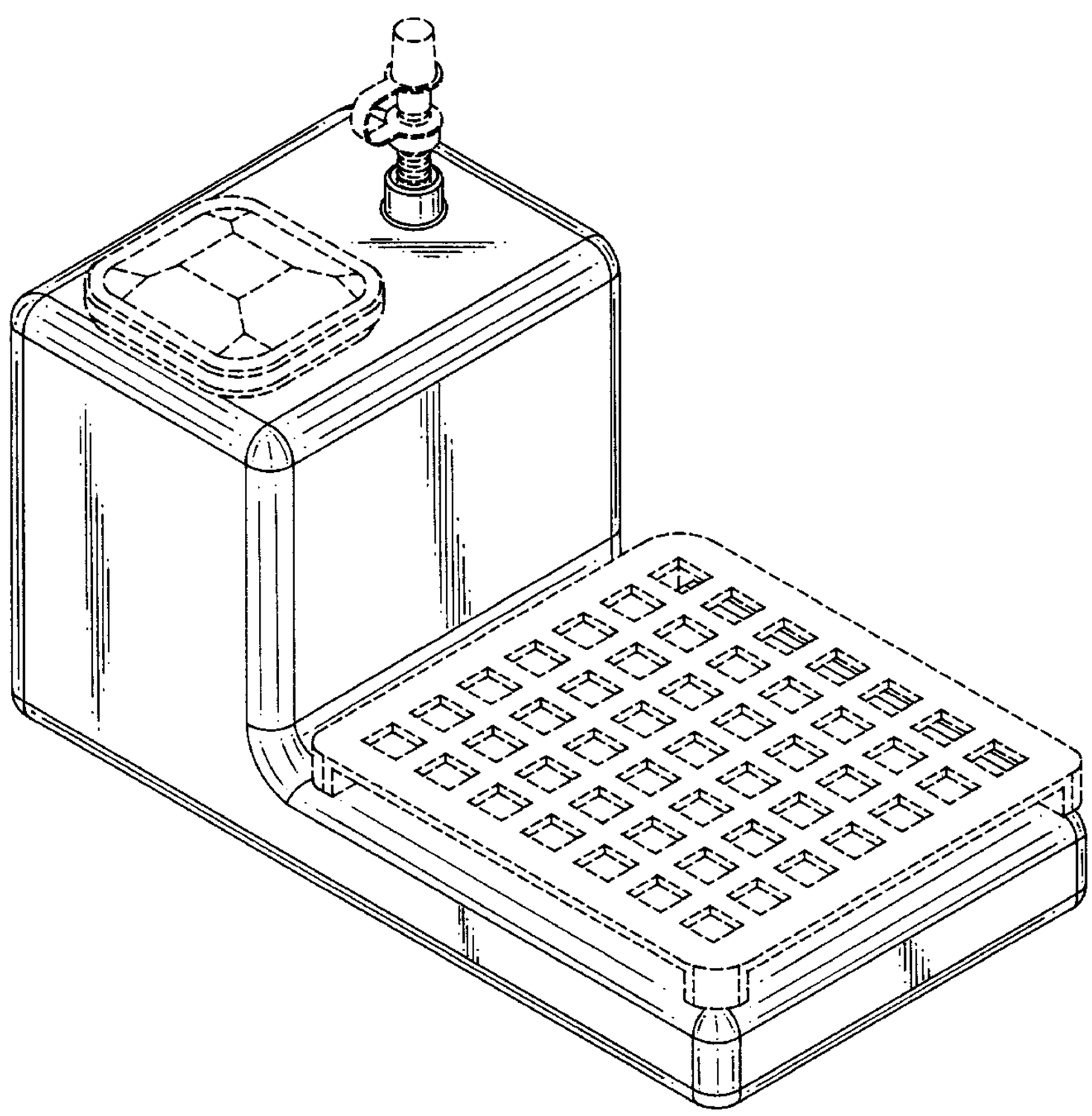

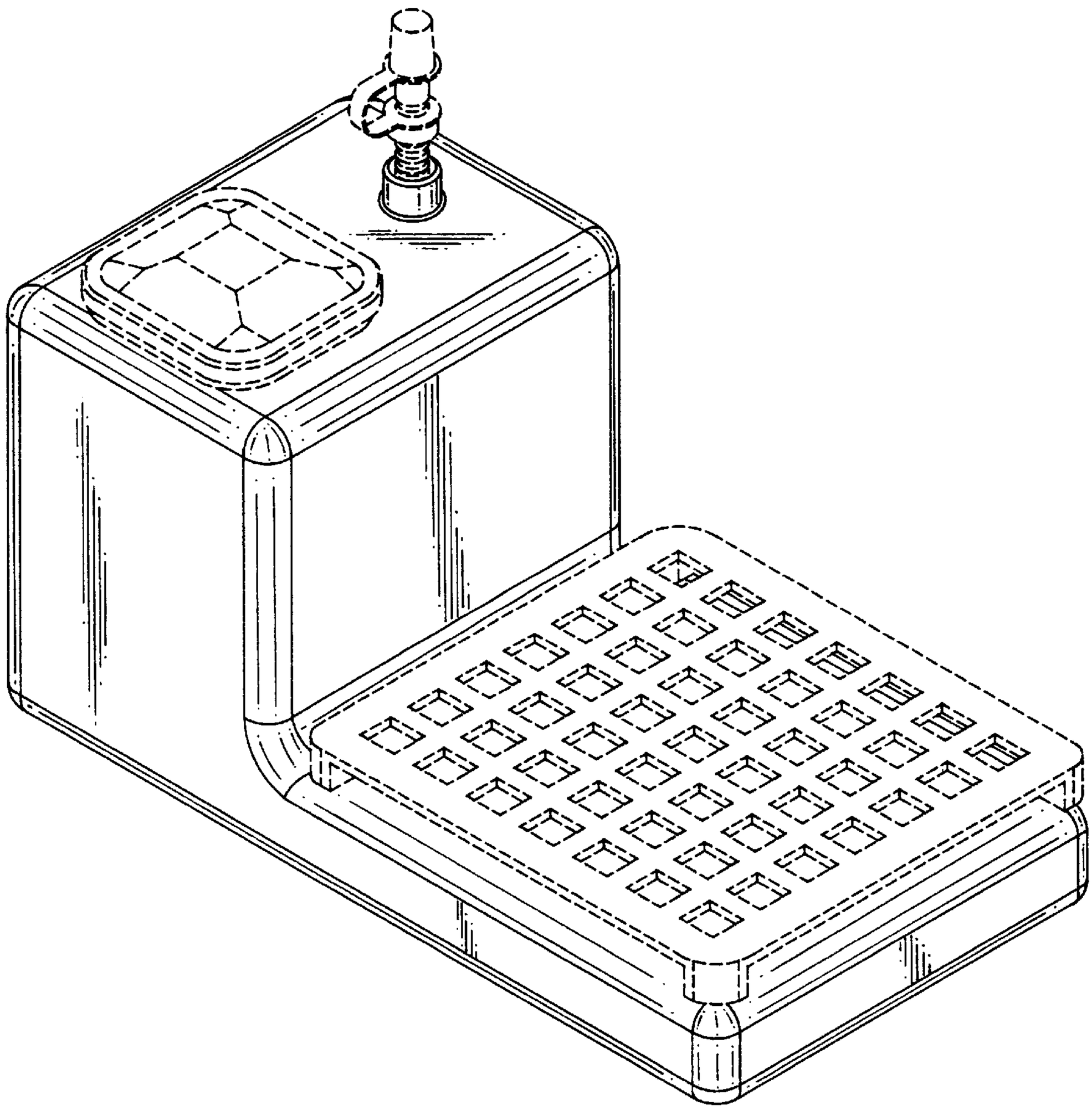

FIG. 1

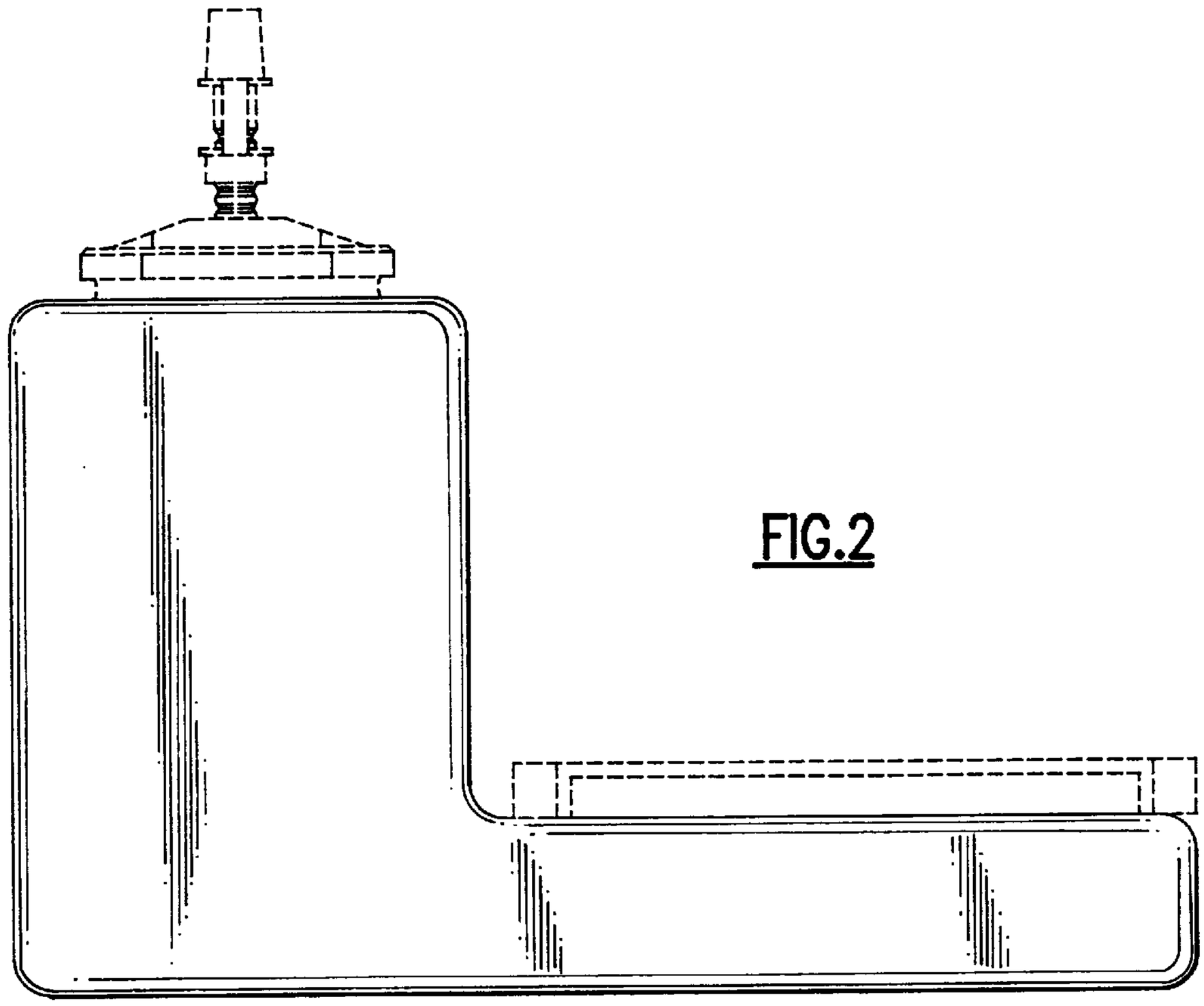

FIG.2

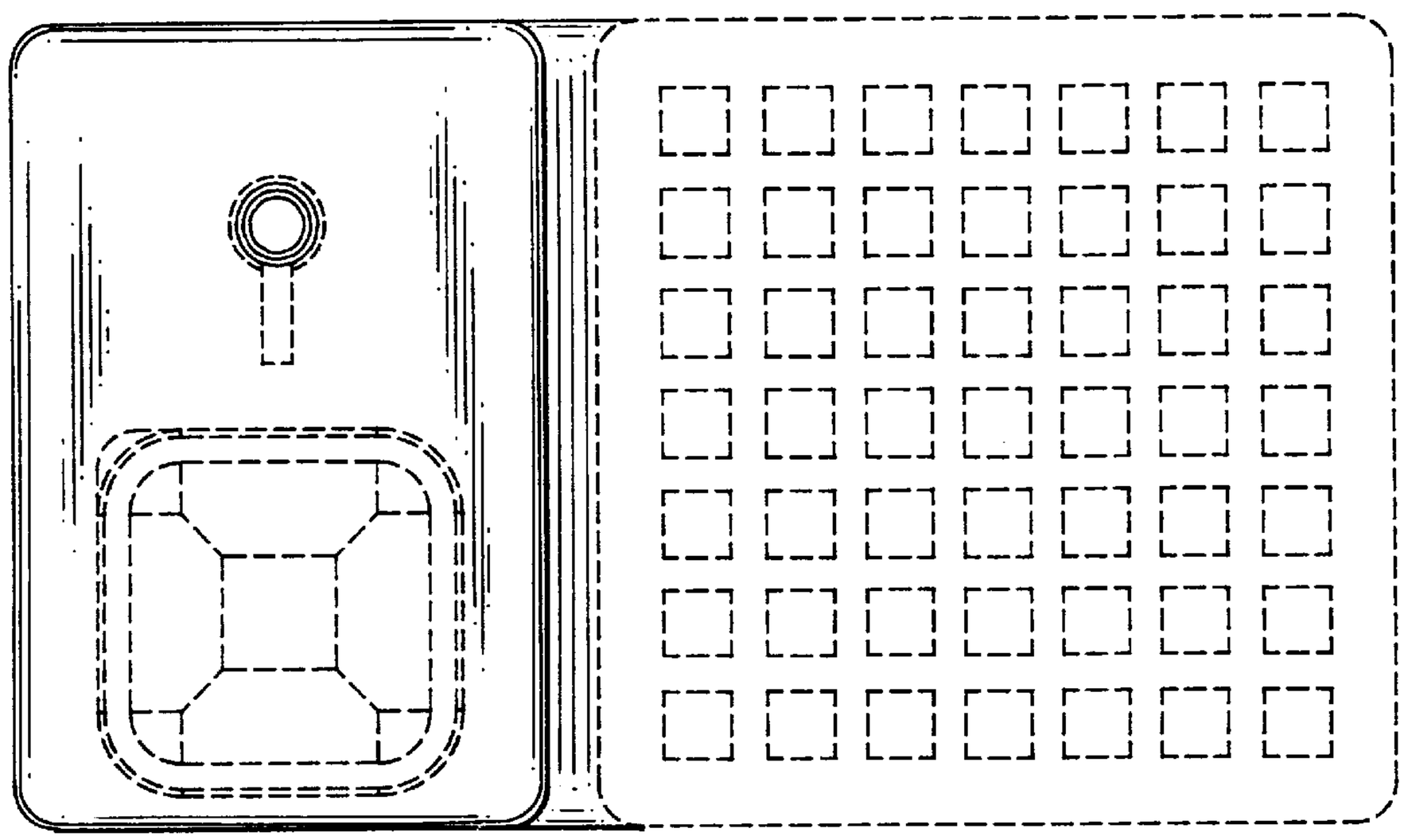

FIG.3

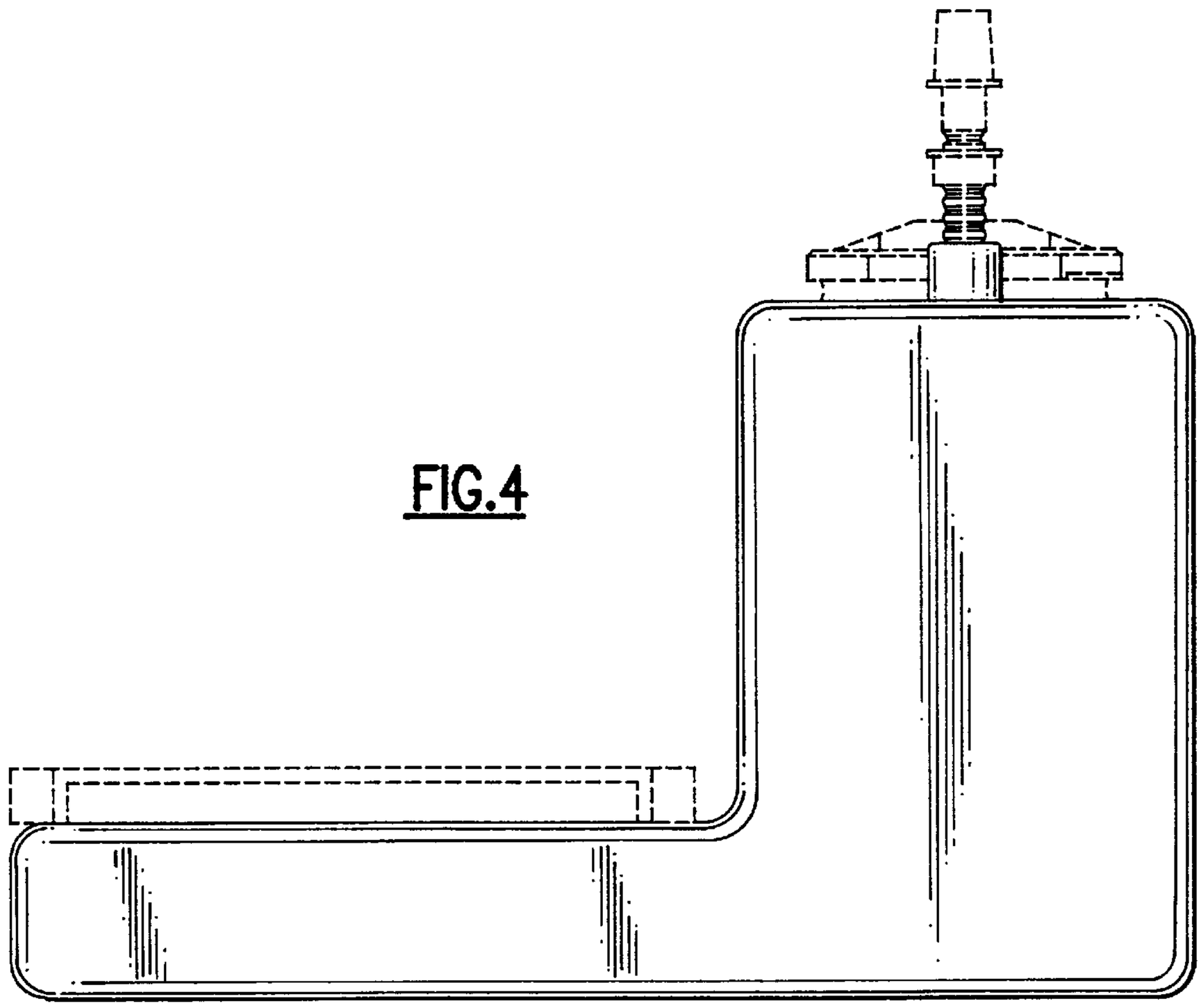

FIG.4

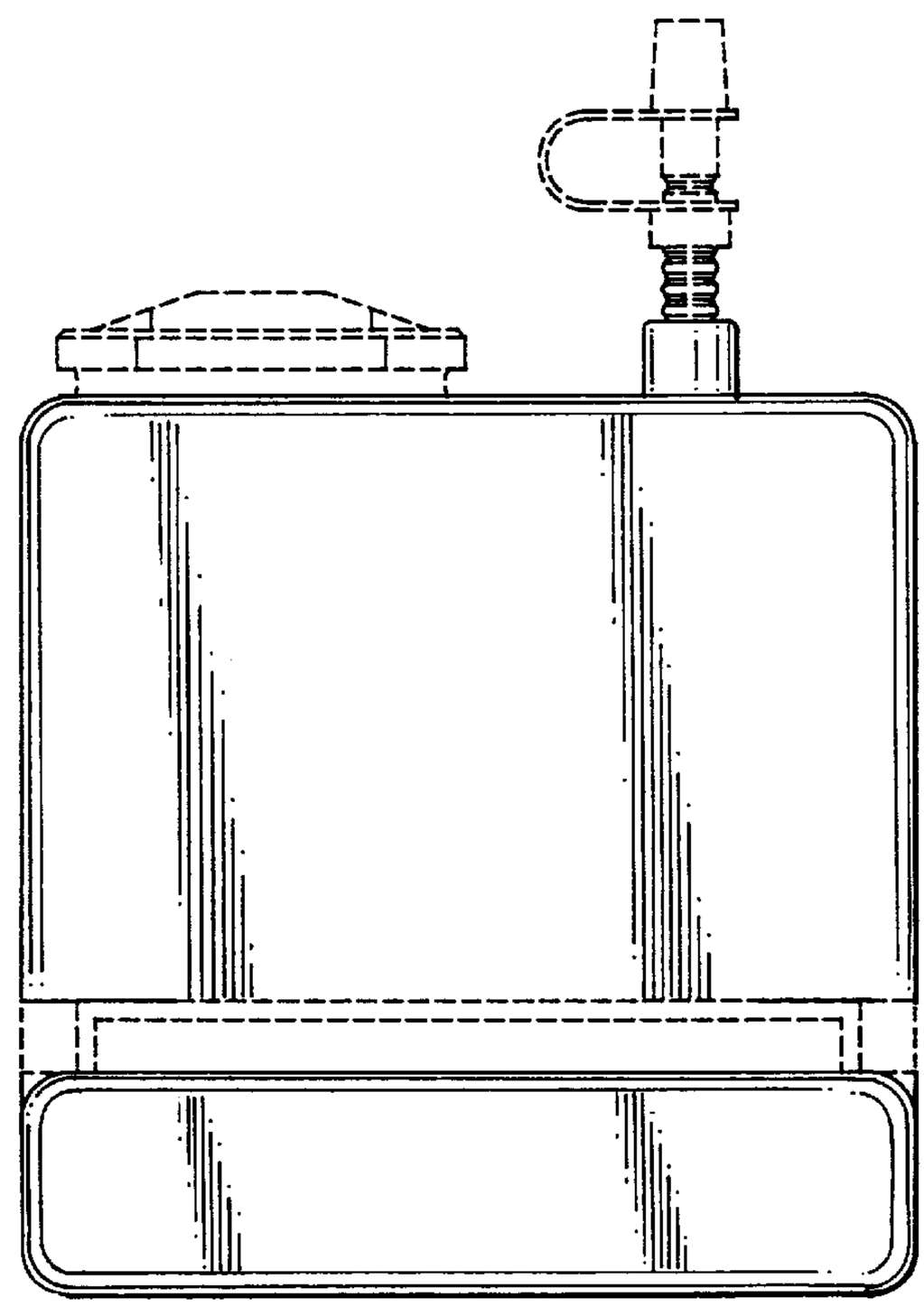

FIG.5

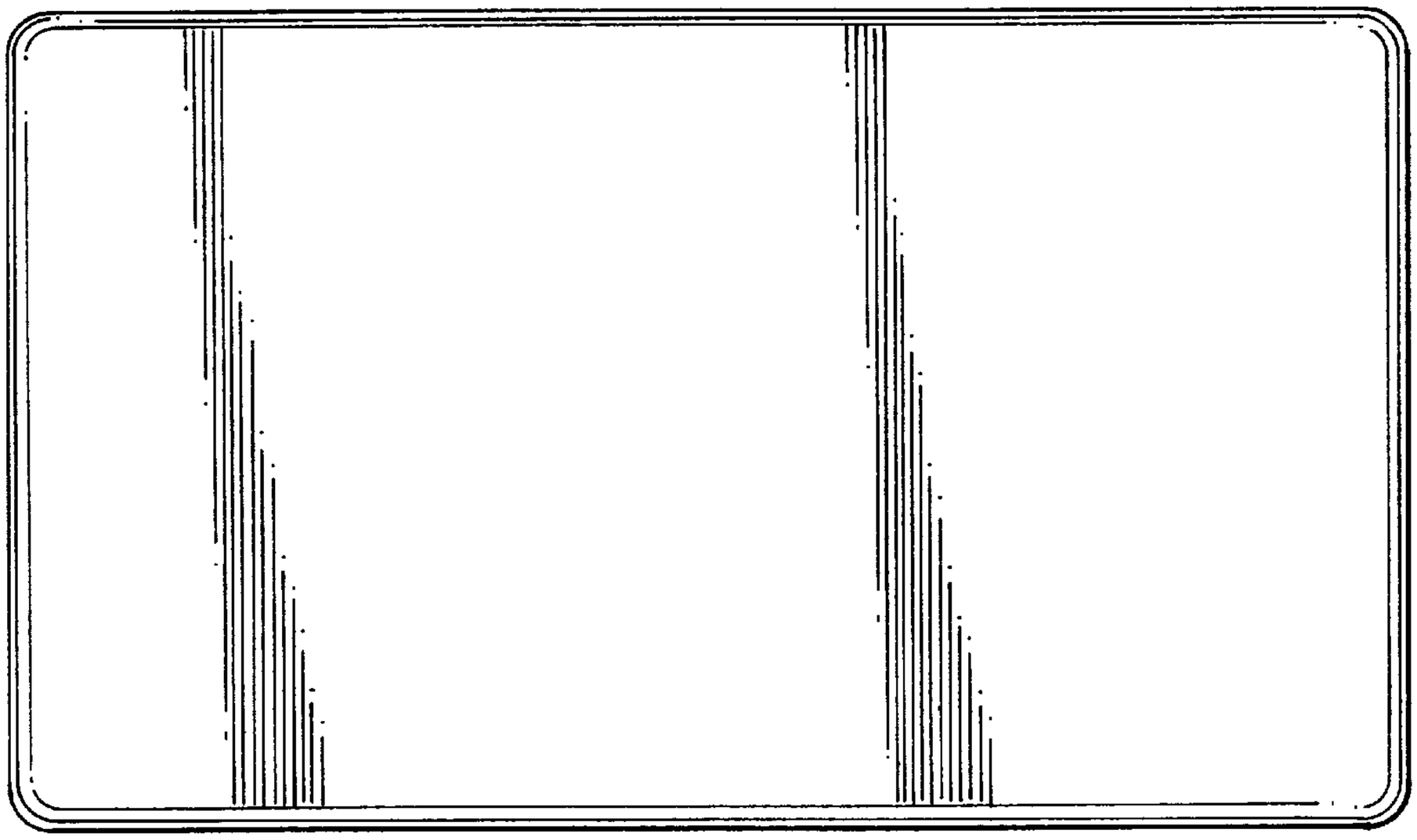

FIG.6

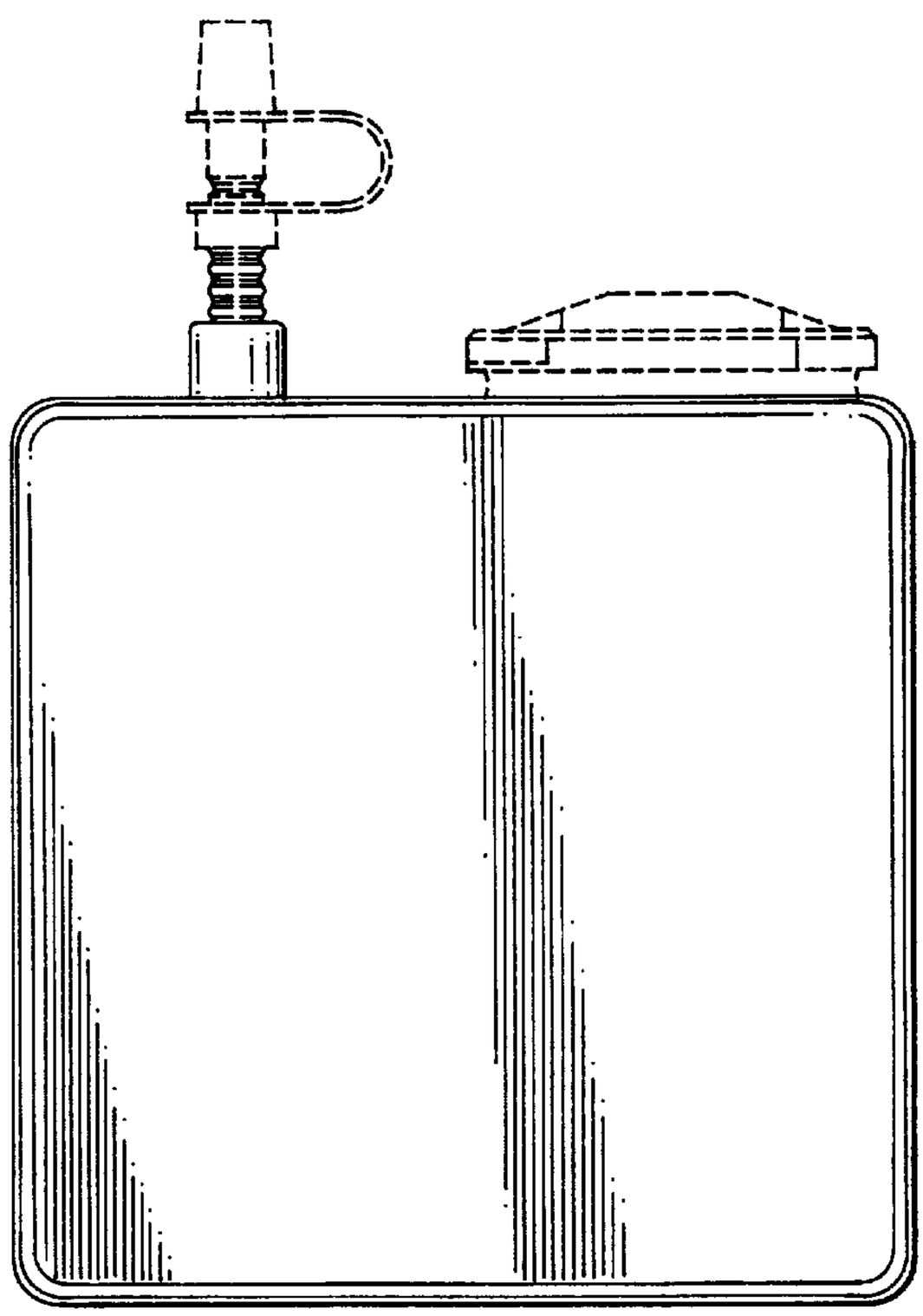

FIG.7