US00D423673S

United States Patent [19]

Bassøe

[11] **Patent Number: Des. 423,673**

[45] **Date of Patent: ** Apr. 25, 2000**

[54] **ELECTRODE FOR MEDICAL USE**

[75] Inventor: **Thomas Bassøe**, Slagelse, Denmark

[73] Assignee: **Medicotest A/S**, Olstykke, Denmark

[**] Term: **14 Years**

[21] Appl. No.: **29/100,313**

[22] Filed: **Feb. 9, 1999**

[30] **Foreign Application Priority Data**

Sep. 1, 1998 [DK] Denmark 1998 00902

[51] **LOC (6) Cl.** **24-01**

[52] **U.S. Cl.** **D24/187**

[58] **Field of Search** D24/187; 607/152, 607/148, 149, 153, 5; 128/640, 641, 642

[56] **References Cited**

U.S. PATENT DOCUMENTS

D. 369,667	5/1996	Vincents et al.	D24/187
D. 378,614	3/1997	Jensen	D24/187
D. 385,037	10/1997	Jensen	D24/187
4,524,775	6/1985	Rasmussen .	
4,838,273	6/1989	Cartmell	128/640
5,080,099	1/1992	Way et al.	128/640

Primary Examiner—Stella Reid
Attorney, Agent, or Firm—Oliff & Berridge, PLC

[57] **CLAIM**

The ornamental design for "an electrode for medical use", as shown and described.

DESCRIPTION

FIG. **1** is a bottom view of an electrode for medical use;
FIG. **2** is a side view thereof;
FIG. **3** is a front view thereof;
FIG. **4** is a top view thereof; and,
FIG. **5** is a top perspective view thereof.

1 Claim, 1 Drawing Sheet

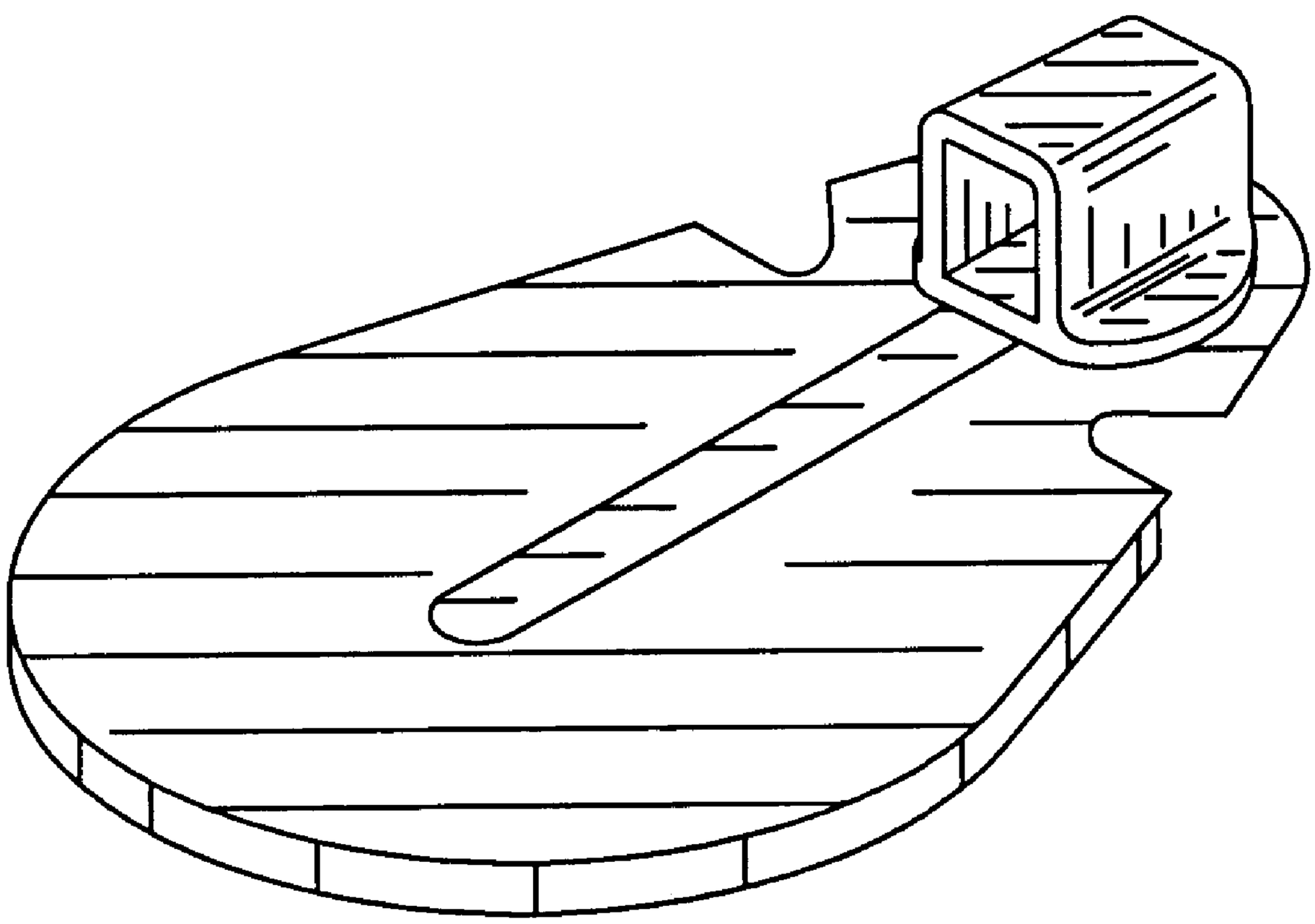

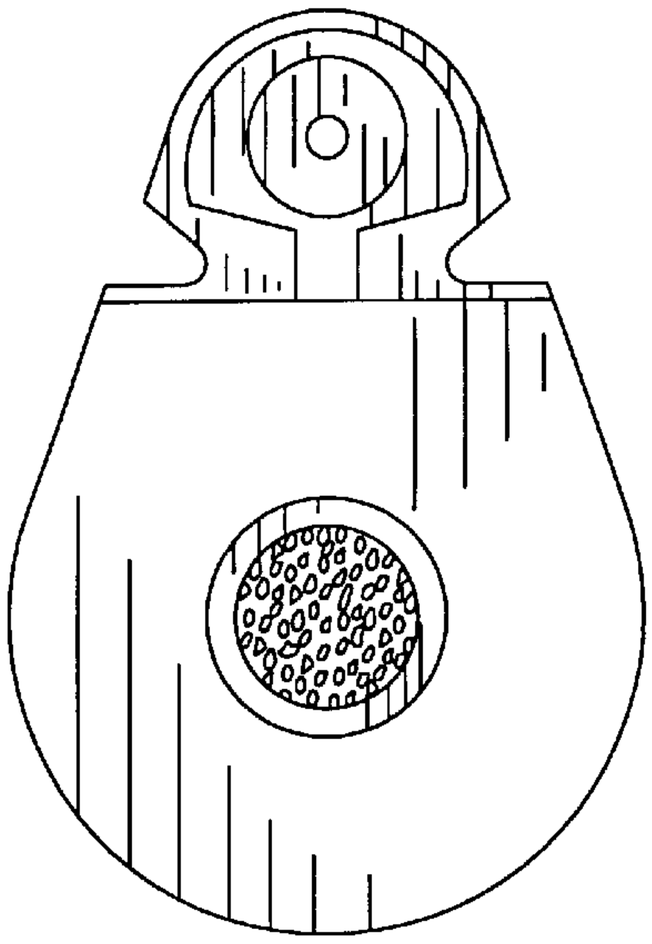

FIG. 1

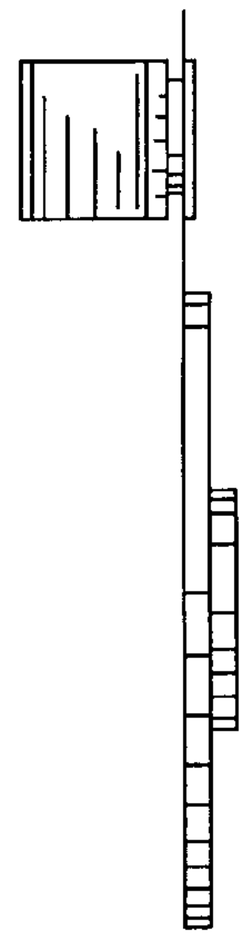

FIG. 2

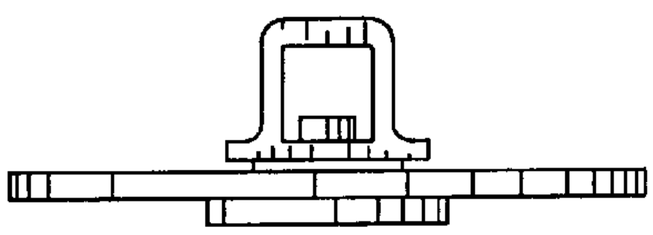

FIG. 3

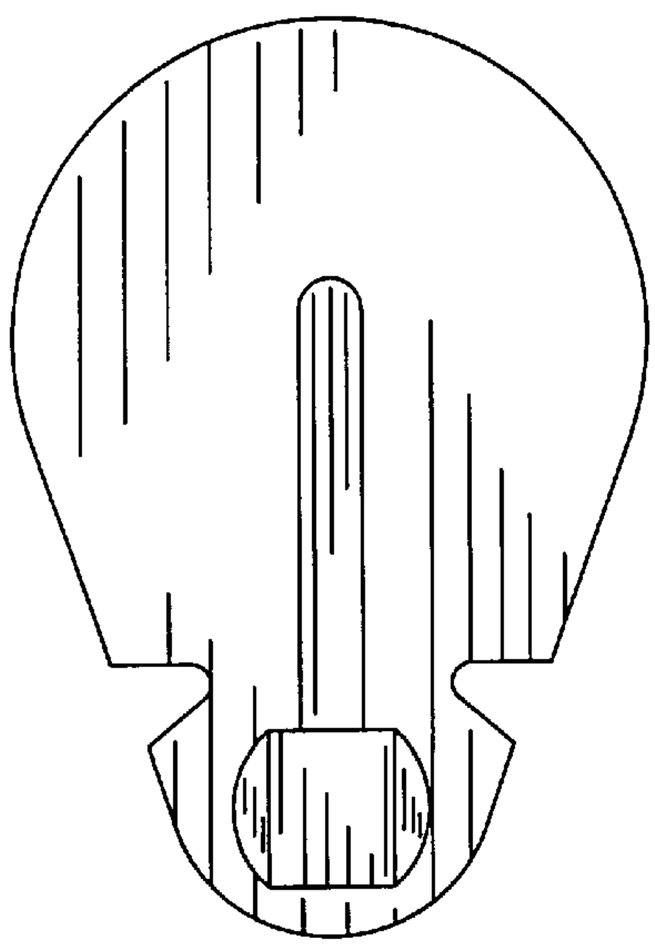

FIG. 4

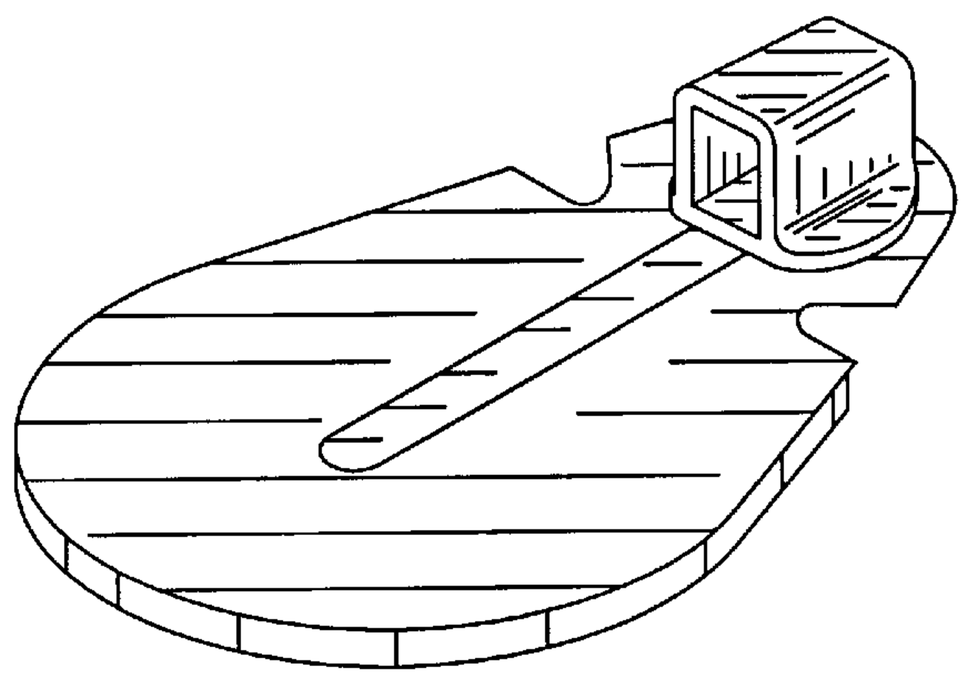

FIG. 5