US00D422836S

United States Patent [19]

Mittmann

[11] Patent Number: Des. 422,836

[45] Date of Patent: ** Apr. 18, 2000

[54] **PAN CORNER**

[75] Inventor: **Jeffrey C. Mittmann**, Plymouth, Wis.

[73] Assignee: **The Vollrath Company, L.L.C.**, Sheboygan, Wis.

[**] Term: **14 Years**

[21] Appl. No.: **29/108,804**

[22] Filed: **Aug. 3, 1999**

Related U.S. Application Data

[62] Division of application No. 29/085,301, Mar. 19, 1998.

[51] **LOC (6) Cl.** **07-02**

[52] **U.S. Cl.** **D7/354**; D9/434

[58] **Field of Search** D7/354–361; D8/18, D8/34; D9/345, 415, 423–426, 434, 435; 206/216, 427, 459.5, 508, 515, 518, 564, 592, 593; 220/4.21, 200, 309.1, 309.2, 212, 256, 380, 780–788, 790, 912, 801; 229/406

[56] **References Cited**

U.S. PATENT DOCUMENTS

D. 191,565	10/1961	Wolf et al. .	
D. 202,964	11/1965	Benes et al. .	
D. 277,993	3/1985	Sinchok .	
D. 282,520	2/1986	Schrage .	
D. 291,526	8/1987	Heaney et al. .	
D. 365,273	12/1995	Indekeu .	
D. 387,986	12/1997	Hayes et al. .	
2,170,040	8/1939	Stuart .	
2,605,929	8/1952	Bloomfield .	
2,656,066	10/1953	Riemenschneider .	
2,673,003	3/1954	Stewart .	
2,738,915	3/1956	Clair .	
2,814,427	11/1957	Emery .	
3,064,849	11/1962	Ferm	220/256 X
3,098,597	7/1963	Johnson et al. .	
3,326,408	6/1967	Ringlen .	
3,420,431	1/1969	Donovan .	

(List continued on next page.)

FOREIGN PATENT DOCUMENTS

1253019	12/1960	France .
267337	11/1988	France .
0348866	9/1993	France .
0348867	9/1993	France .
0348868	9/1993	France .
0348869	9/1993	France .
0348870	9/1993	France .
0348871	9/1993	France .
0348872	9/1993	France .
0348873	9/1993	France .
038746	1/1997	Germany .

Primary Examiner—Caron D. Veynar
Attorney, Agent, or Firm—Foley & Lardner

[57] **CLAIM**

The ornamental design for a pan corner, as shown.

DESCRIPTION

FIG. **1** is a top perspective view of a pan corner showing my new design;
FIG. **2** is a top plan view, the bottom plan view being a mirror image thereof;
FIG. **3** is a front elevational view thereof;
FIG. **4** is an auxiliary elevational view taken along lines **4—4** of FIG. **2**;
FIG. **5** is a right side elevational view thereof;
FIG. **6** is a sectional view taken along lines **6—6** of FIG. **2**;
FIG. **7** is a top perspective view of a second embodiment of FIGS. **1–6**;
FIG. **8** is a top plan view of the second embodiment; the bottom plan view being a mirror image thereof;
FIG. **9** is a front elevational view of the second embodiment;
FIG. **10** is an auxiliary elevational view of the second embodiment taken along lines **10—10** of FIG. **8**;
FIG. **11** is a right side elevational view of the second embodiment; and,
FIG. **12** is a sectional view of the second embodiment taken along lines **12—12** of FIG. **8**.
The broken lines shown in FIGS. **1–12** are for illustrative purposes only and form no part of the claimed design.

1 Claim, 3 Drawing Sheets

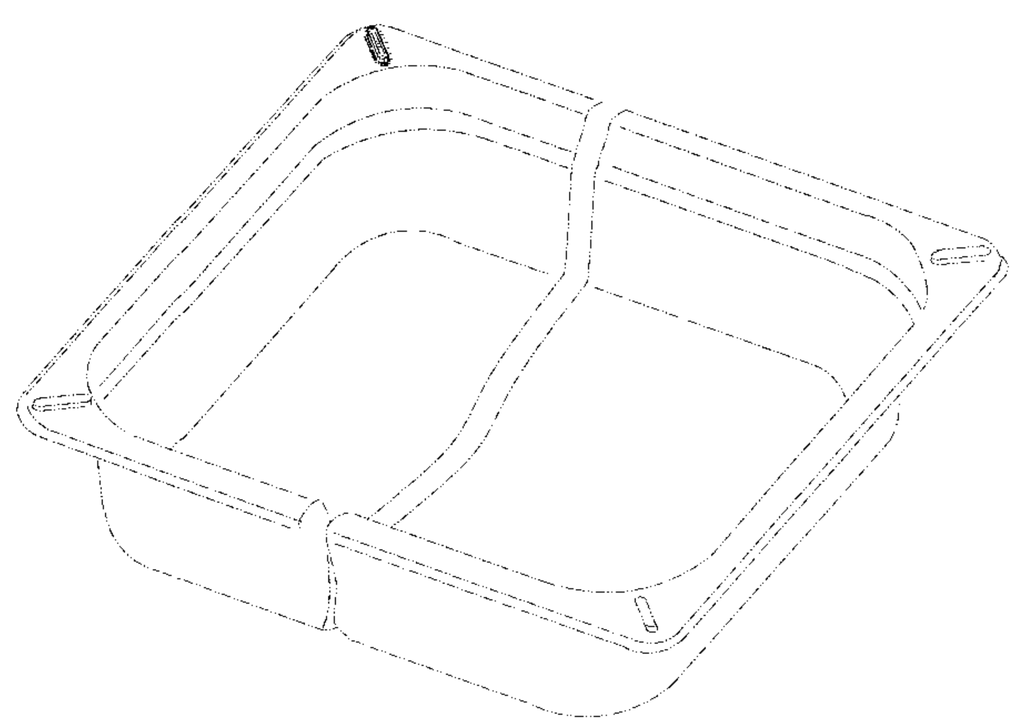

U.S. PATENT DOCUMENTS

3,442,377	5/1969	Angelus .	
3,451,588	6/1969	Weber .	
3,539,552	11/1970	Mounts et al. .	
3,558,002	1/1971	Lindgren .	
3,563,445	2/1971	Clayton .	
3,583,623	6/1971	Golner et al. .	
3,700,096	10/1972	Reifers .	
3,938,727	2/1976	Andersson .	
4,113,095	9/1978	Dietz et al. .	
4,183,435	1/1980	Thompson et al. .	
4,494,650	1/1985	Cullen	220/788 X
4,660,734	4/1987	Heaney et al.	220/657
5,035,327	7/1991	Denzin et al. .	
5,244,094	9/1993	Graff, Jr. et al. .	
5,375,719	12/1994	Mittmann et al. .	
5,377,860	1/1995	Littlejohn et al.	220/790
5,641,090	6/1997	Kowalski et al. .	

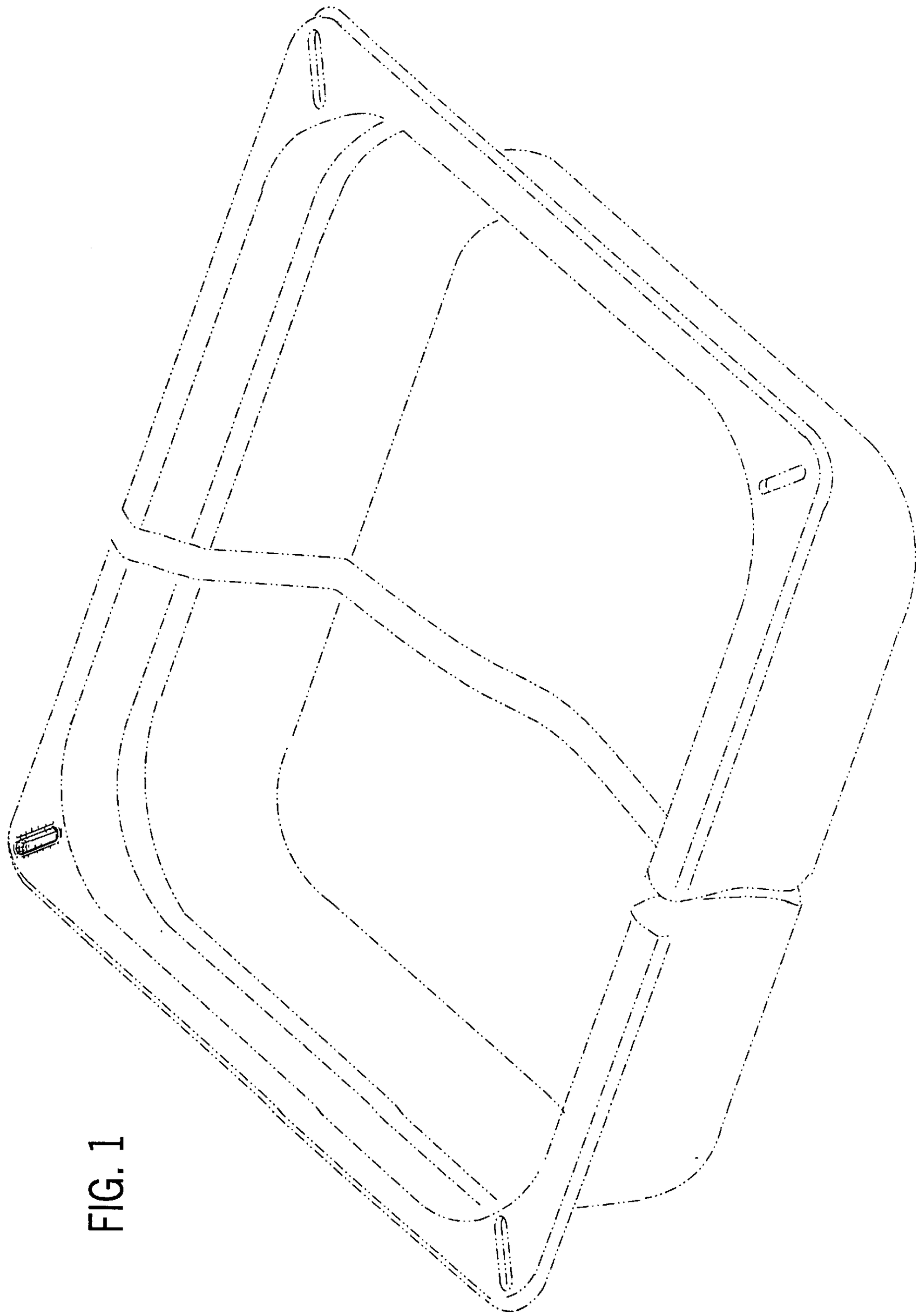

FIG. 1

FIG. 2

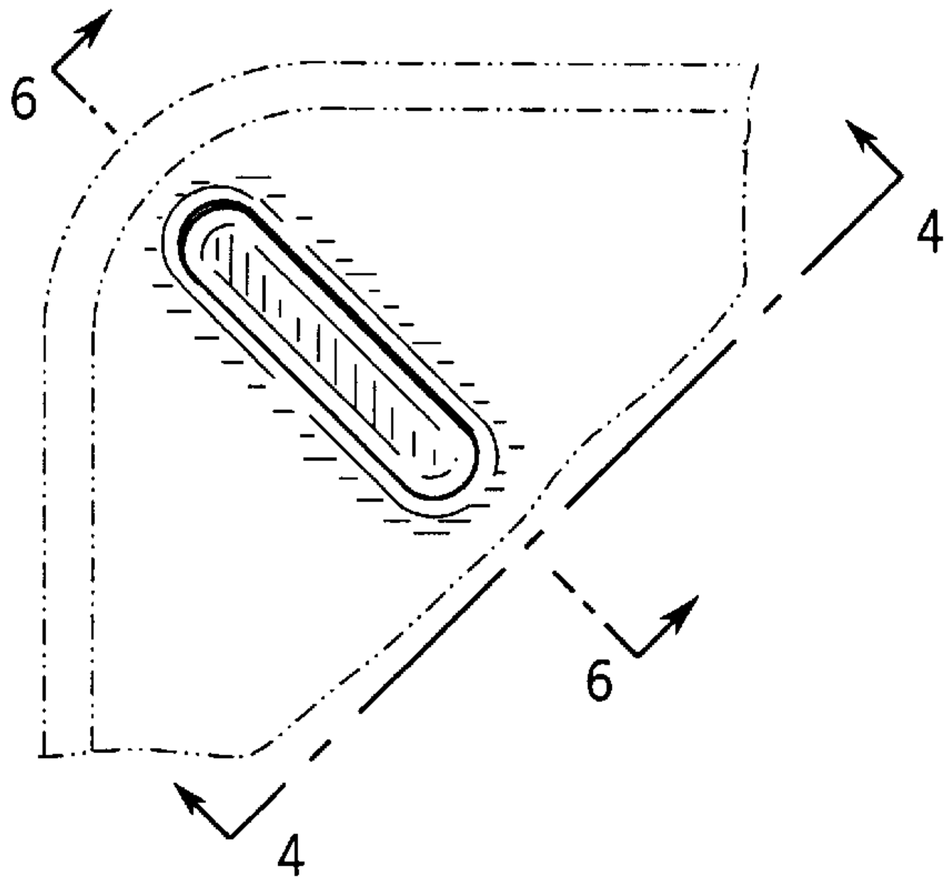

FIG. 8

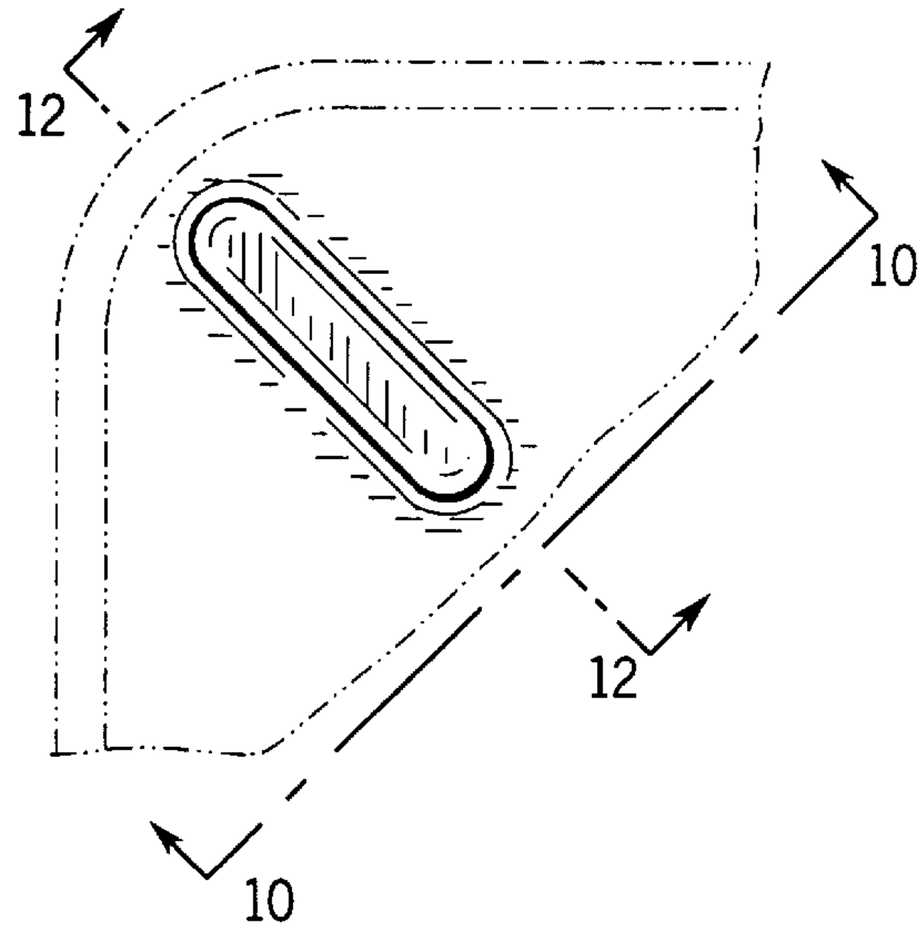

FIG. 3

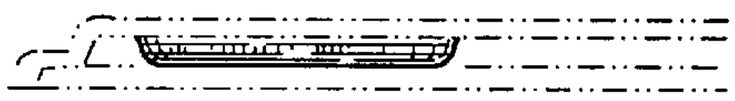

FIG. 9

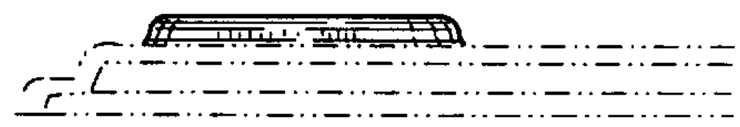

FIG. 4

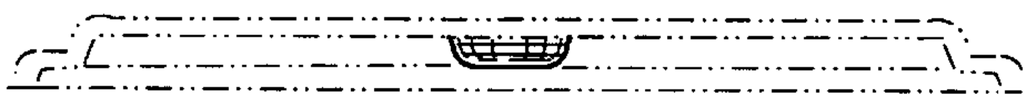

FIG. 10

FIG. 5

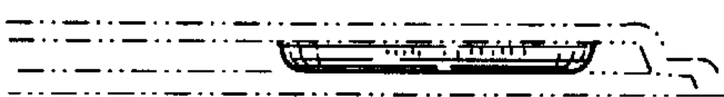

FIG. 11

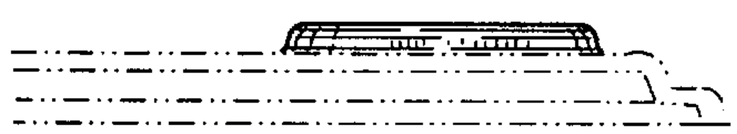

FIG. 6

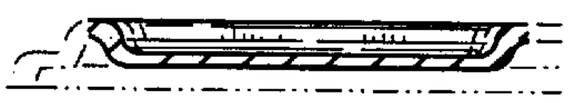

FIG. 12

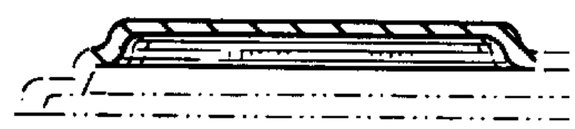

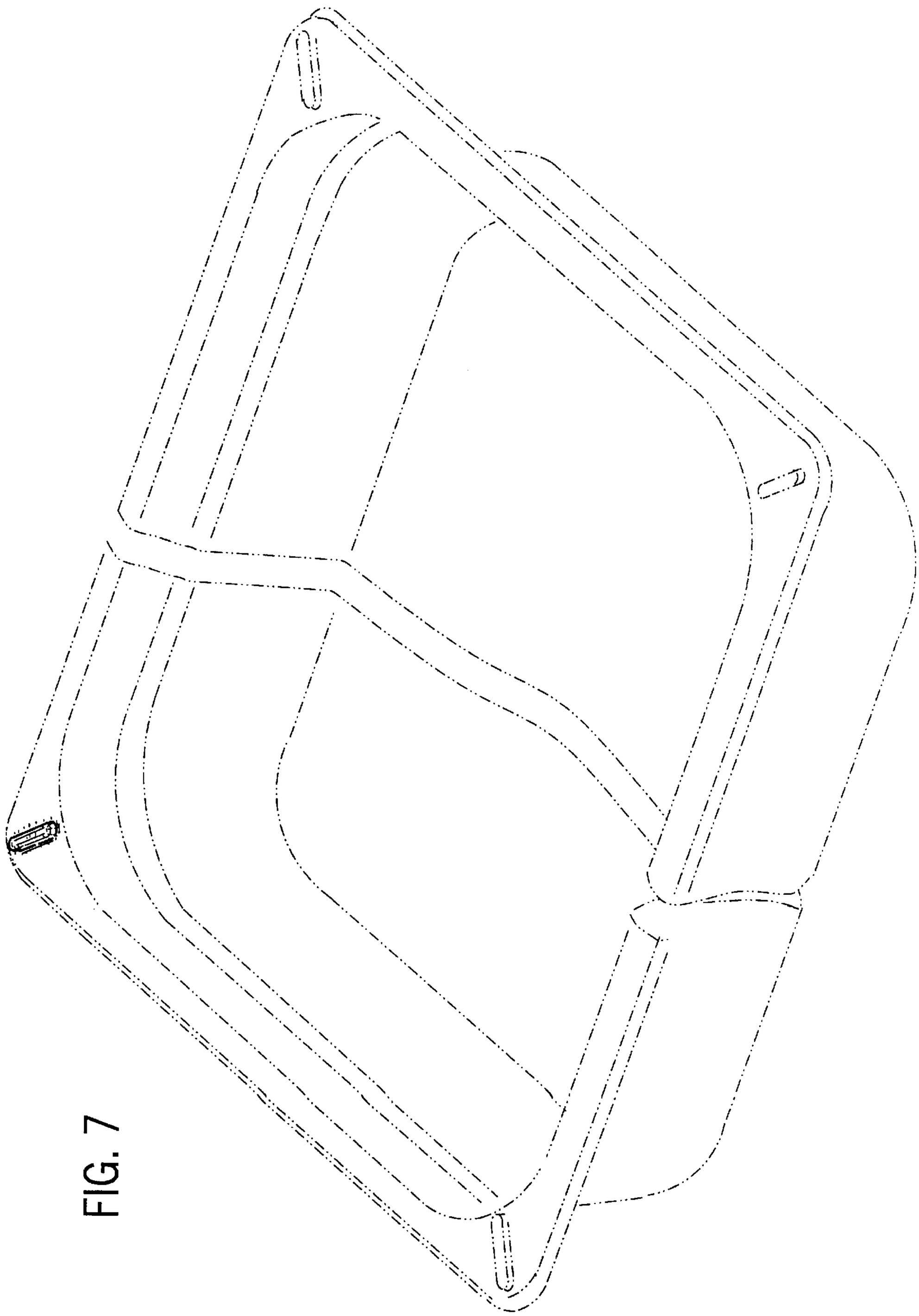

FIG. 7