US00D420341S

United States Patent [19]

Faris et al.

[11] Patent Number: Des. 420,341

[45] Date of Patent: ** Feb. 8, 2000

[54] **WINDOW FOR A COMPUTER DISPLAY SCREEN**

[75] Inventors: **James P. Faris**, Santa Cruz; **Jeffrey E. Tycz**, Palo Alto, both of Calif.

[73] Assignee: **Apple Computer, Inc.**, Cupertino, Calif.

[**] Term: **14 Years**

[21] Appl. No.: **29/087,503**

[22] Filed: **May 4, 1998**

Related U.S. Application Data

[62] Division of application No. 29/038,515, May 5, 1995, abandoned.

[51] **LOC (7) Cl.** **14-02**

[52] **U.S. Cl.** **D14/114.1**

[58] **Field of Search** D14/114, 114.1–114.9; D18/24–33; D19/6; D20/11; D21/324–33; 345/326, 339–40, 347–57

[56] **References Cited**

U.S. PATENT DOCUMENTS

D. 296,114	6/1988	Wells-Papanek et al. .	
D. 297,243	8/1988	Wells-Papanek et al. .	
D. 391,559	3/1998	Faris et al.	D14/114.1
D. 392,264	3/1998	Marshall, Jr. et al.	D14/114.1
D. 401,230	11/1998	Marshall, Jr. et al.	D14/114.1
D. 402,284	12/1998	Coleman	D14/114.2
D. 404,385	1/1999	Hodgson	D14/114.1
5,140,677	8/1992	Fleming et al. .	
5,179,700	1/1993	Aihara et al.	395/650
5,202,828	4/1993	Vertelney et al.	364/419
5,327,529	7/1994	Fults et al.	395/155
5,371,844	12/1994	Andrew et al.	395/155
5,388,202	2/1995	Squires et al. .	
5,452,406	9/1995	Butler et al.	395/126
5,455,858	10/1995	Lin	379/355
5,559,942	9/1996	Gough et al.	395/155
5,566,295	10/1996	Cypher et al.	395/161
5,596,691	1/1997	Good et al.	395/140
5,603,034	2/1997	Swanson	395/701
5,621,878	4/1997	Owens et al.	395/326
5,634,102	5/1997	Capps	395/334
5,652,714	7/1997	Peterson et al.	364/550
5,652,876	7/1997	Ashe et al.	395/500

FOREIGN PATENT DOCUMENTS

0650114	4/1995	European Pat. Off.	3/16

OTHER PUBLICATIONS

World Atlaas User's Guide, Software Toolworks, index map, p. 11, 1991.

MacDraw II User's Manual, Claris, screen, p. 4, 1988.

Microsoft Windows 3.1 User's Guide, Microsoft, screens, p. 48 215, p. 221, p. 20, 1992..

Hypercard User's Guide, Apple Software, menus, p. 66, 1988.

Mastering WordPerfect 5.1 for Windows, Cybex, windows, pp. 83, 1066, 1992.

Microsoft Window User's Guide, Version 2.0, Microsoft Corp., clipboard screen, p. 132, 1987.

"Building User Interfaces by Direct Manipulation," Cardelli, Proceedings of the ACM Siggraph Symposium on User Interface Software, ACM Press, 1988, pp. 152–166.

"Macintosh Graphics", New American Library, 1985, pp. 49–50, 107–108.

"IBM OS/2 2.0 Presentation Manager Graphics Programming Guide", pp. 5–1 to 5–5, 7–1 to 7–9, 1992.

Primary Examiner—M. H. Tung

Attorney, Agent, or Firm—Helene Plotka Workman

[57] **CLAIM**

The ornamental design for a window for a computer display screen, as shown and described.

DESCRIPTION

FIG. **1** is a front view of a window for a computer display screen;

FIG. **2** is a front view of a second embodiment thereof; and,

FIG. **3** is a front view of a third embodiment thereof.

1 Claim, 3 Drawing Sheets

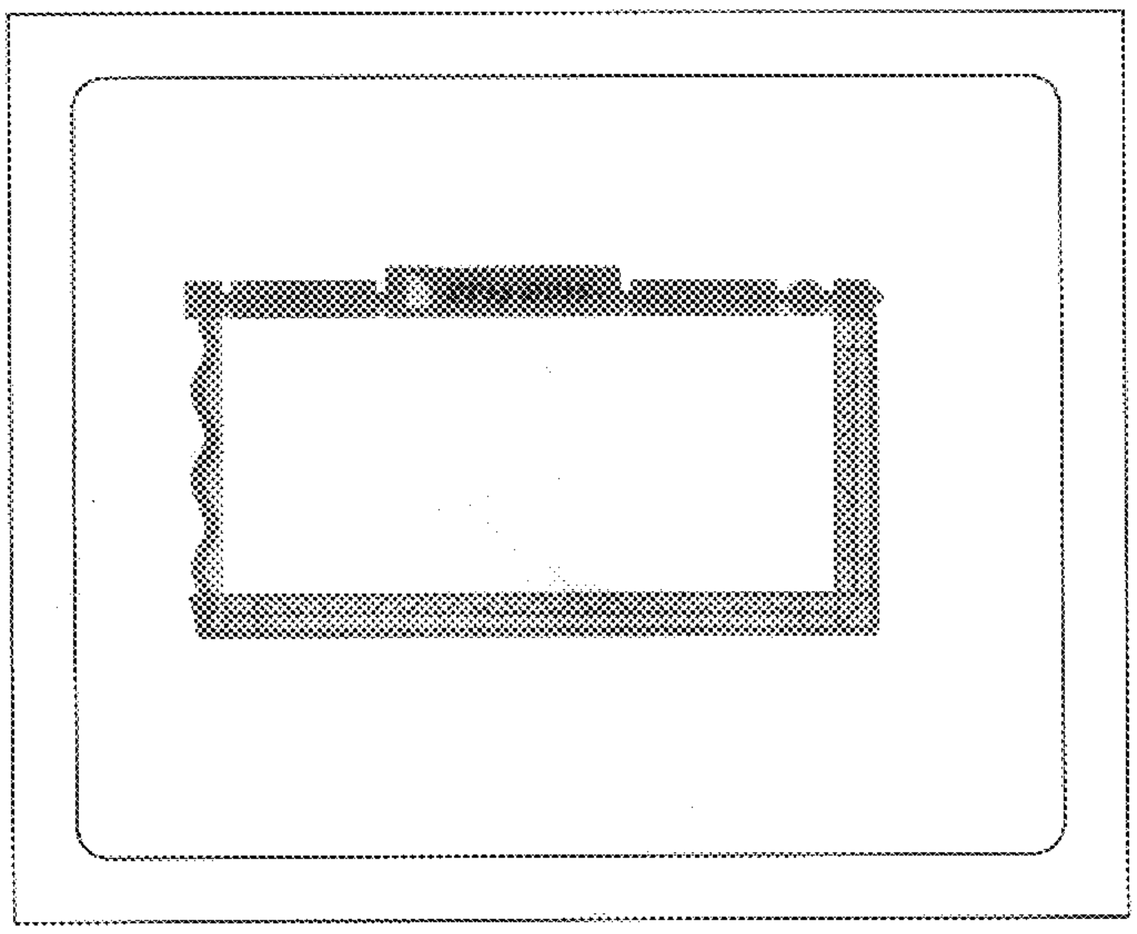

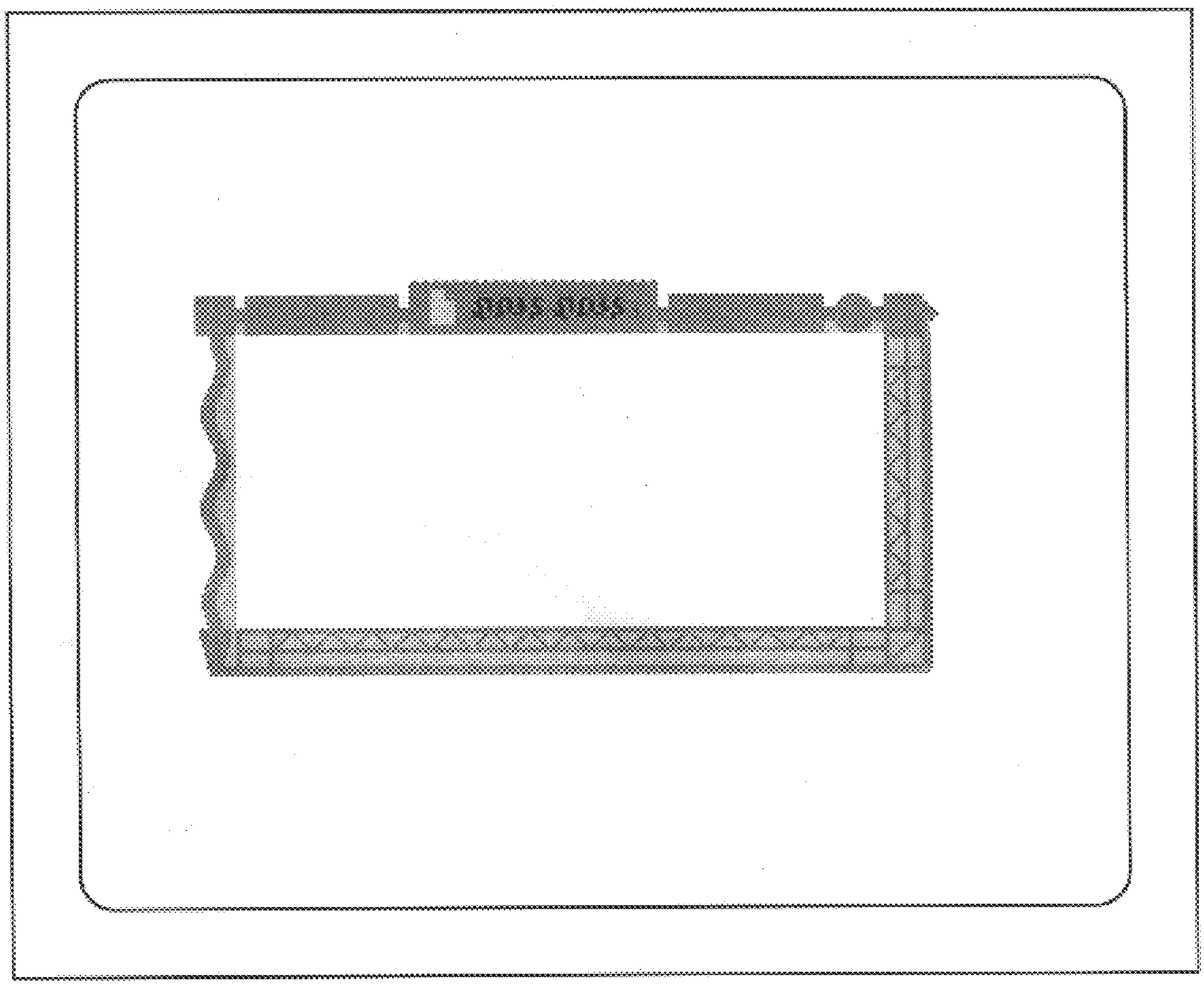

FIG. 1

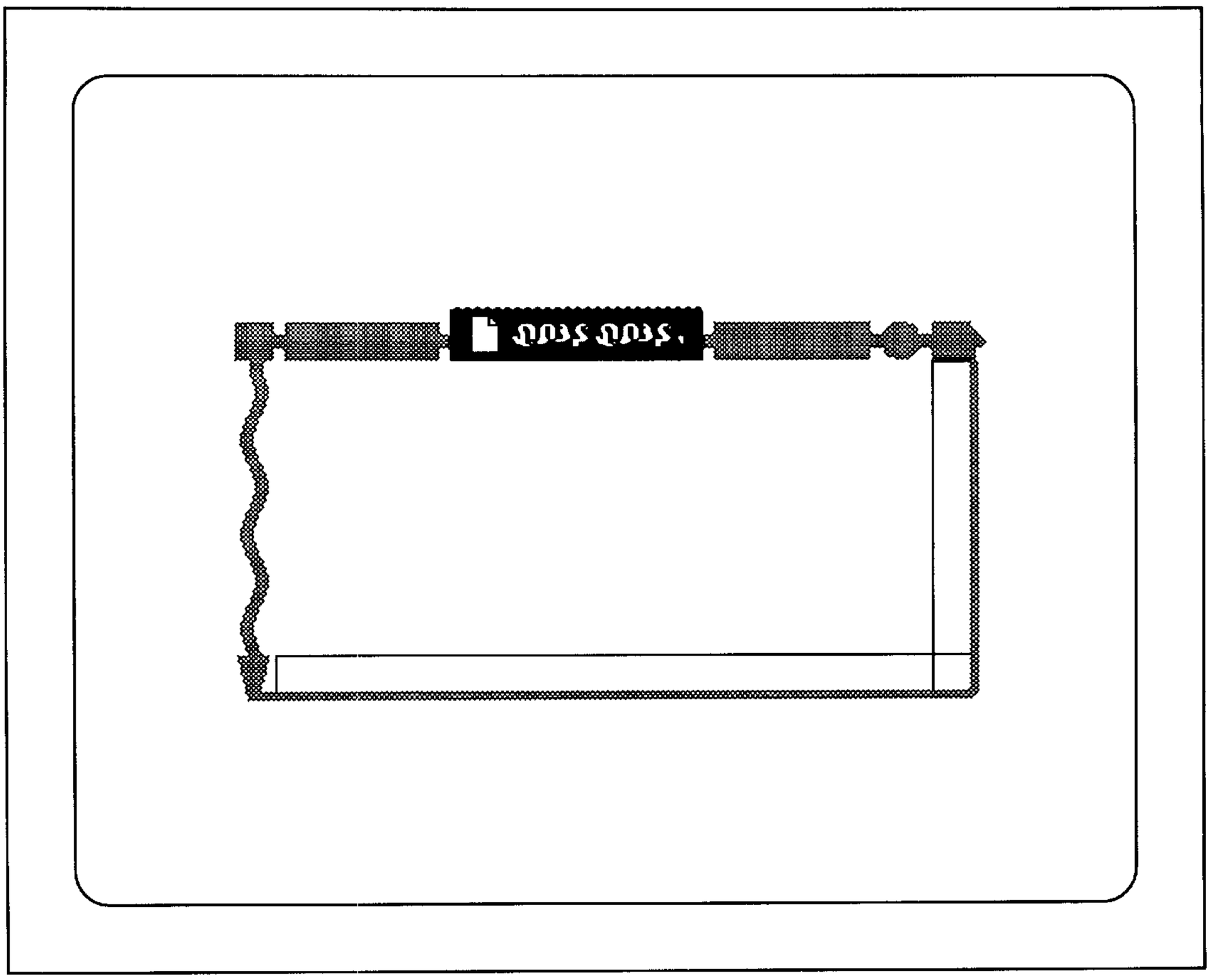

FIG. 2

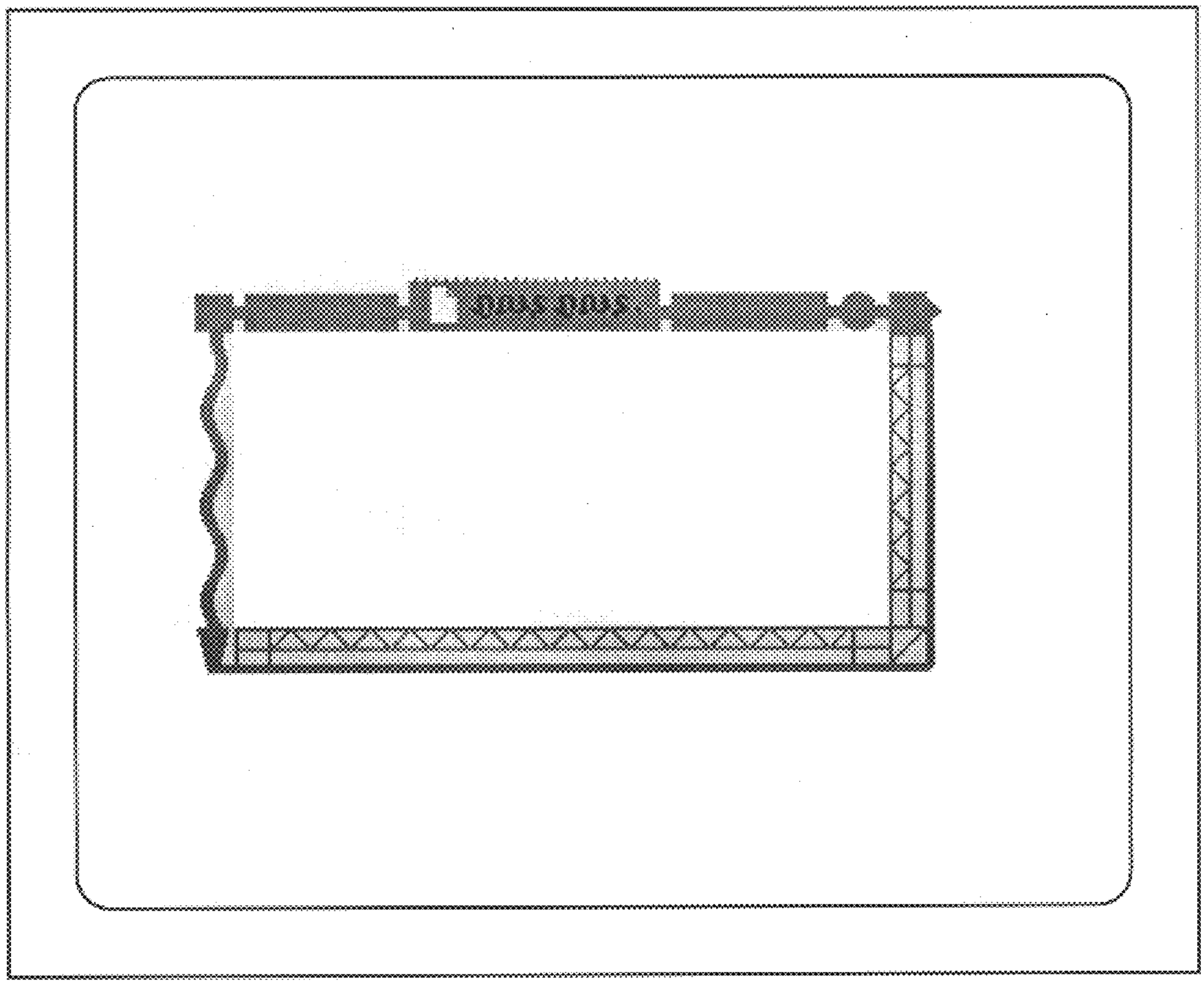

FIG. 3