US00D417543S

United States Patent [19]

Gable

[11] Patent Number: Des. 417,543

[45] Date of Patent: ** Dec. 14, 1999

[54] **SHOULDER PAD**

[76] Inventor: **Lisa Gable**, 719 St. James Pl., #419, East Windsor, N.J. 08520

[**] Term: **14 Years**

[21] Appl. No.: **29/084,167**

[22] Filed: **Feb. 26, 1998**

[51] **LOC (6) Cl.** **02-07**

[52] **U.S. Cl.** **D2/856**; D2/853

[58] **Field of Search** D2/711, 856, 700, D2/705, 853; 2/53, 268

[56] **References Cited**

U.S. PATENT DOCUMENTS

D. 360,745	8/1995	Nicholson et al.	D2/856
978,620	12/1910	Murk	2/460
2,459,648	1/1949	Ingalls	2/268
2,497,808	2/1950	Zacks	2/268
2,534,513	12/1950	Gerry	2/268
2,568,105	9/1951	Zagata	2/268
2,574,637	11/1951	Gerry	2/268
2,619,650	12/1952	Lerma	2/268
2,689,350	9/1954	Crawford	2/460
5,803,792	9/1998	Roush et al.	450/86

Primary Examiner—Celia Murphy
Attorney, Agent, or Firm—Birgit E. Morris

[57] **CLAIM**

The ornamental design for a shoulder pad, as shown and described.

DESCRIPTION

FIG. **1** is a top perspective view of a shoulder pad showing my new design;
FIG. **2** is a bottom perspective view thereof, the broken lines being understood to represent stitching;
FIG. **3** is a top plan view thereof;
FIG. **4** is a front elevational view thereof;
FIG. **5** is a right side elevational view thereof, the left side being a mirror image;
FIG. **6** is a rear elevational view thereof; and,
FIG. **7** is a bottom plan view thereof.

1 Claim, 3 Drawing Sheets

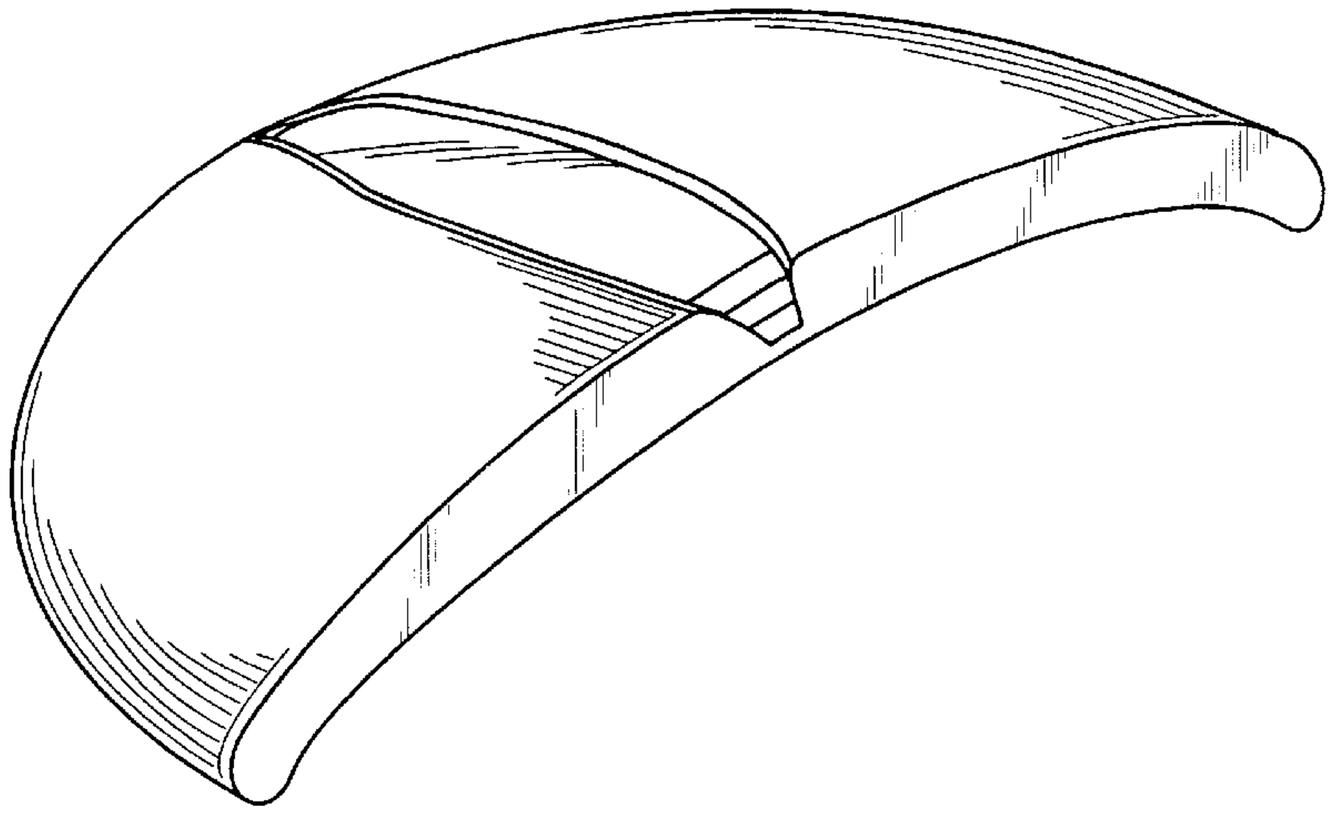

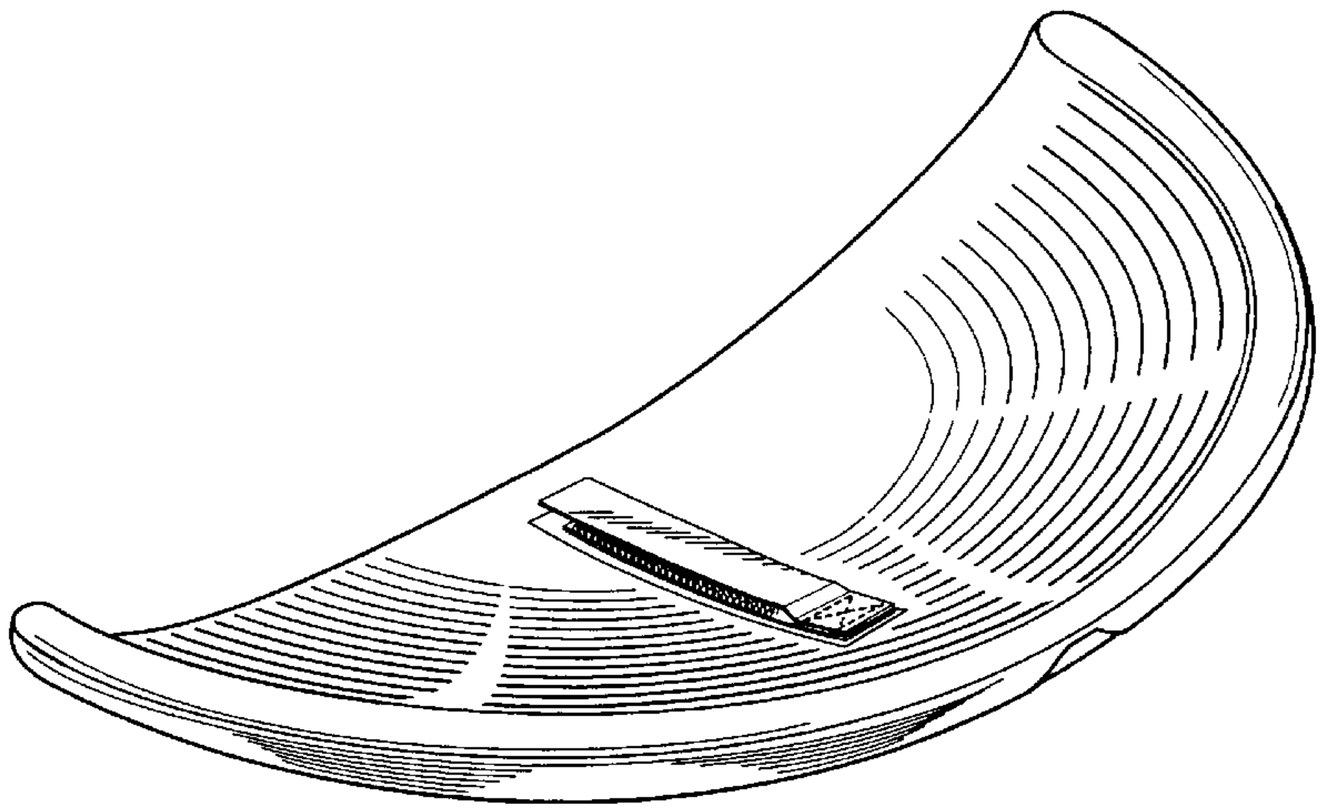

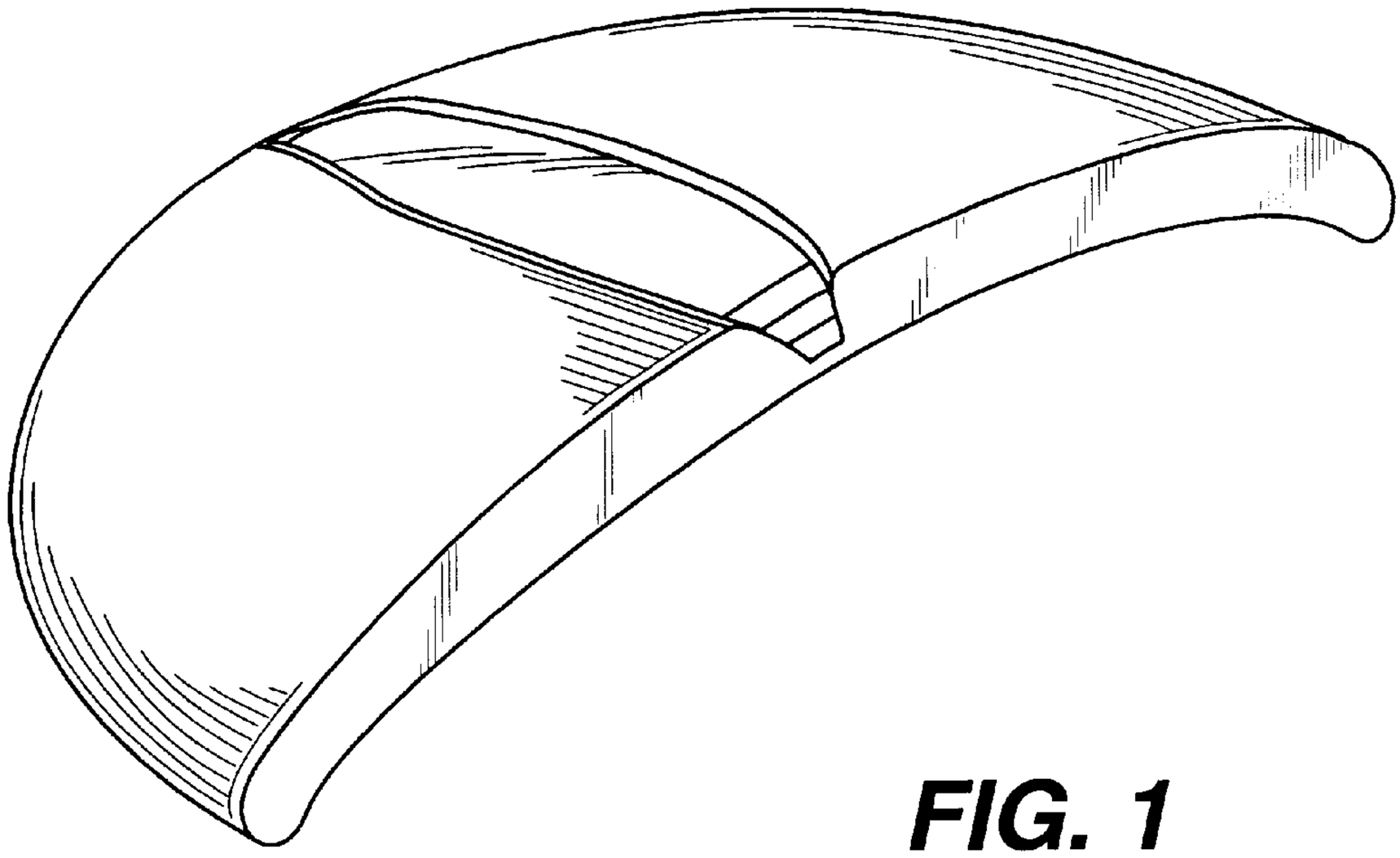

FIG. 1

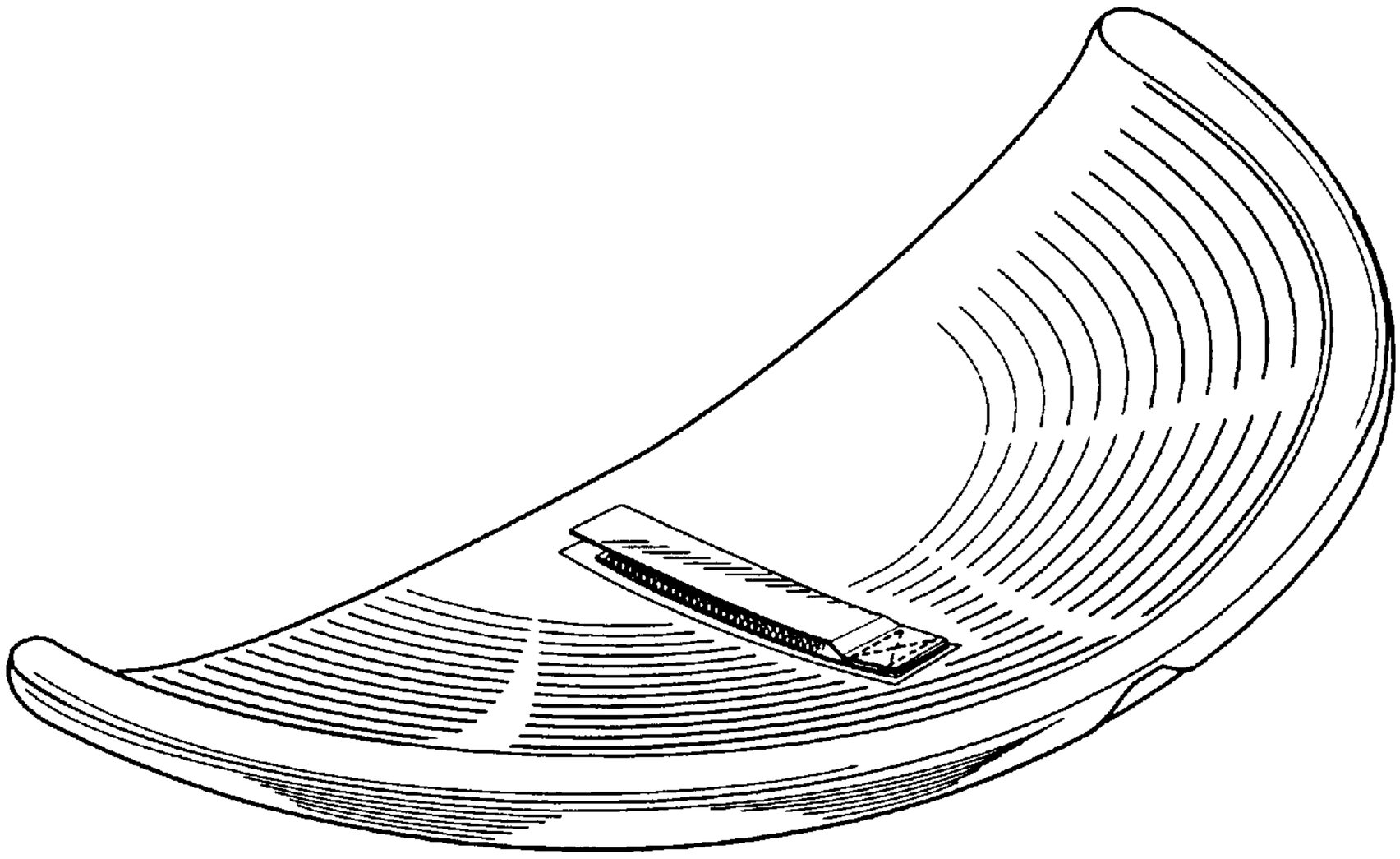

FIG. 2

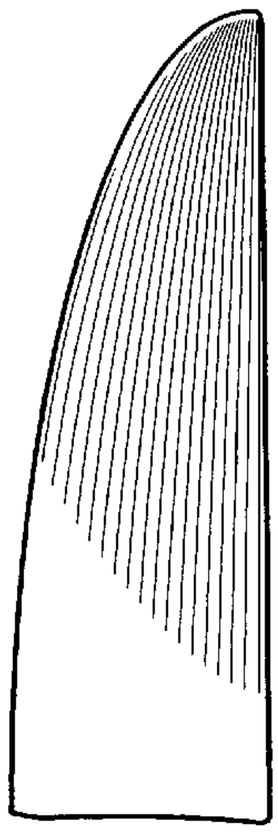

FIG. 5

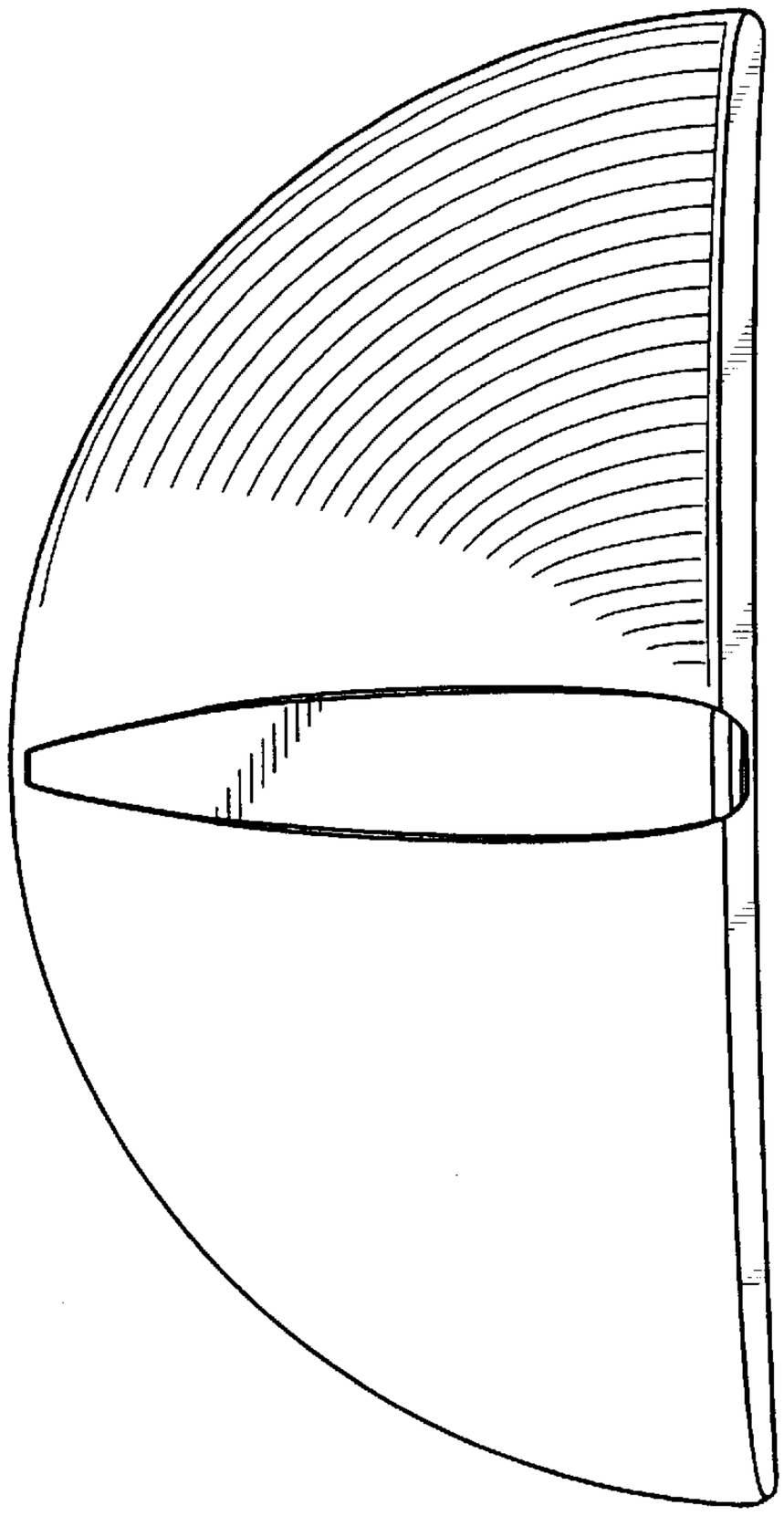

FIG. 3

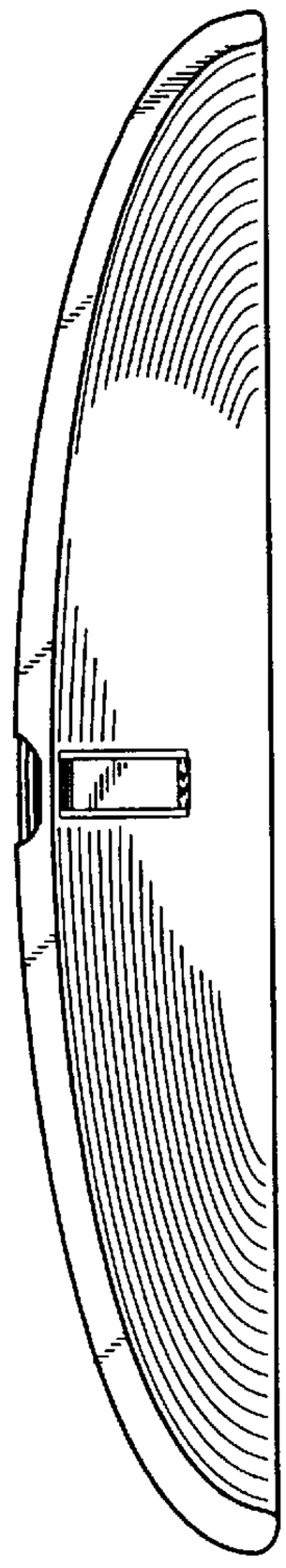

FIG. 4

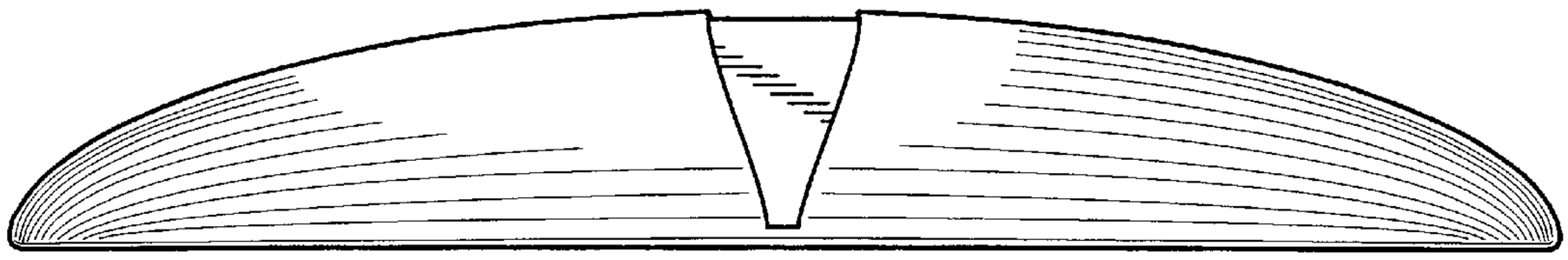

FIG. 6

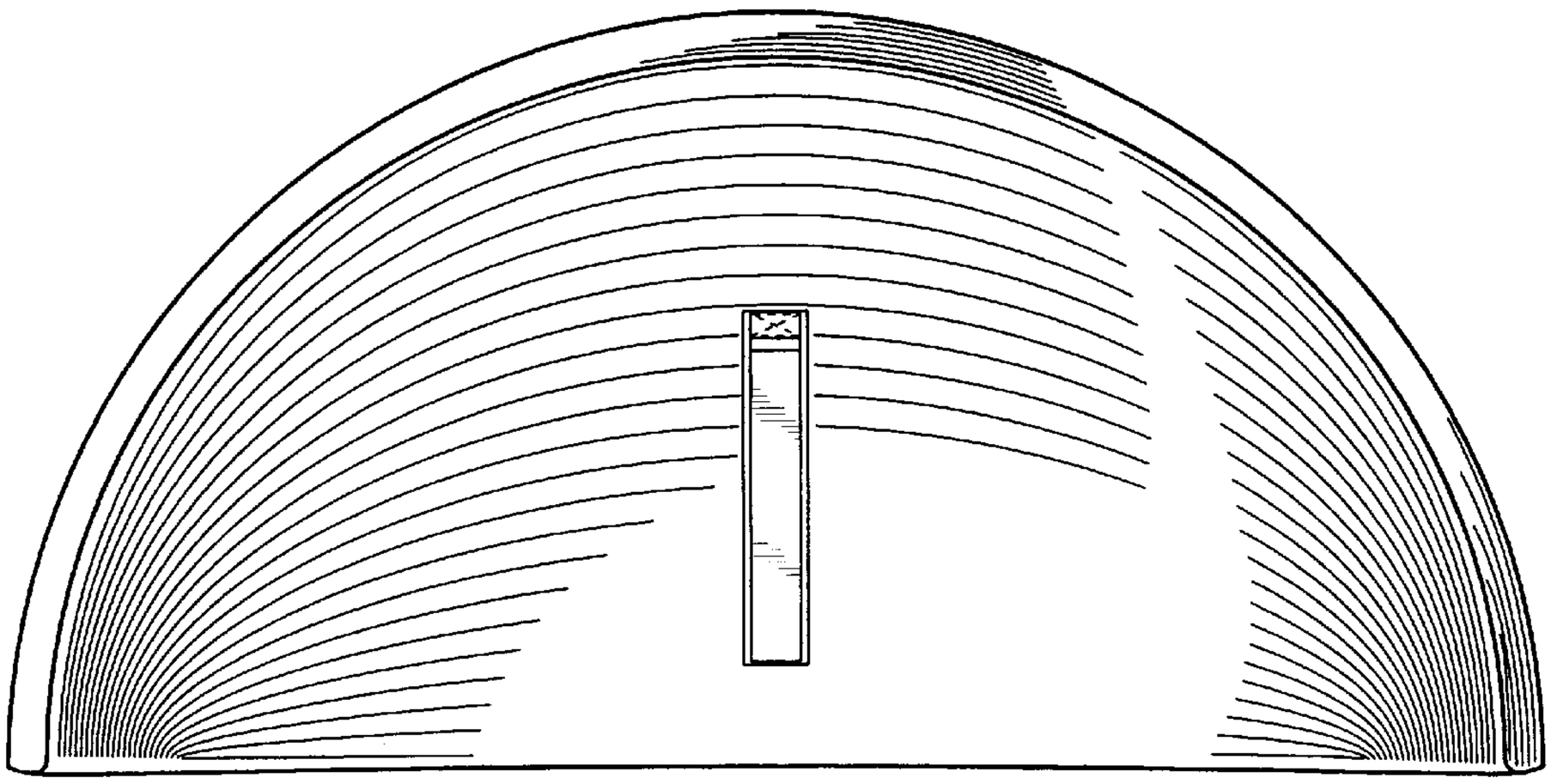

FIG. 7