US00D416236S

United States Patent [19]

Kobayashi et al.

[11] Patent Number: Des. 416,236

[45] Date of Patent: ** Nov. 9, 1999

[54] **INTEGRATED CIRCUIT PACKAGE**

[75] Inventors: **Kazuhiro Kobayashi**, Fujiyoshida; **Masayoshi Shiraishi**; **Osamu Tanabe**, both of Chiba, all of Japan

[73] Assignees: **Citizen Electronics Co., Ltd.**; **Seiko Instruments Inc.**, both of Japan

[**] Term: **14 Years**

[21] Appl. No.: **29/093,046**

[22] Filed: **Sep. 2, 1998**

[51] **LOC (6) Cl.** **13-03**

[52] **U.S. Cl.** **D13/182**

[58] **Field of Search** ..... D13/158, 182, D13/184; D14/100, 114; 174/35 R, 50; 206/701, 706, 718; 257/678; 220/4.02

[56] **References Cited**

U.S. PATENT DOCUMENTS

D. 311,520	10/1990	Serio, Jr.	D13/184
D. 345,731	4/1994	Owens et al.	D13/182
5,295,297	3/1994	Kitamura et al.	206/701
5,841,189	11/1998	Shitama	257/678
5,884,772	3/1999	Floyd et al.	206/701

Primary Examiner—Adir Aronovich
Attorney, Agent, or Firm—Adams & Wilks

[57] **CLAIM**

The ornamental design for an integrated circuit package, as shown and described.

DESCRIPTION

FIG. **1** is a front elevational view of an integrated circuit package showing our new design;
FIG. **2** is a top plan view thereof;
FIG. **3** is a bottom plan view thereof;
FIG. **4** is a right elevational view thereof, the left side being the same in appearance as the right side;
FIG. **5** is a top, front, right perspective view thereof; and,
FIG. **6** is a bottom, rear, right perspective view thereof.

1 Claim, 2 Drawing Sheets

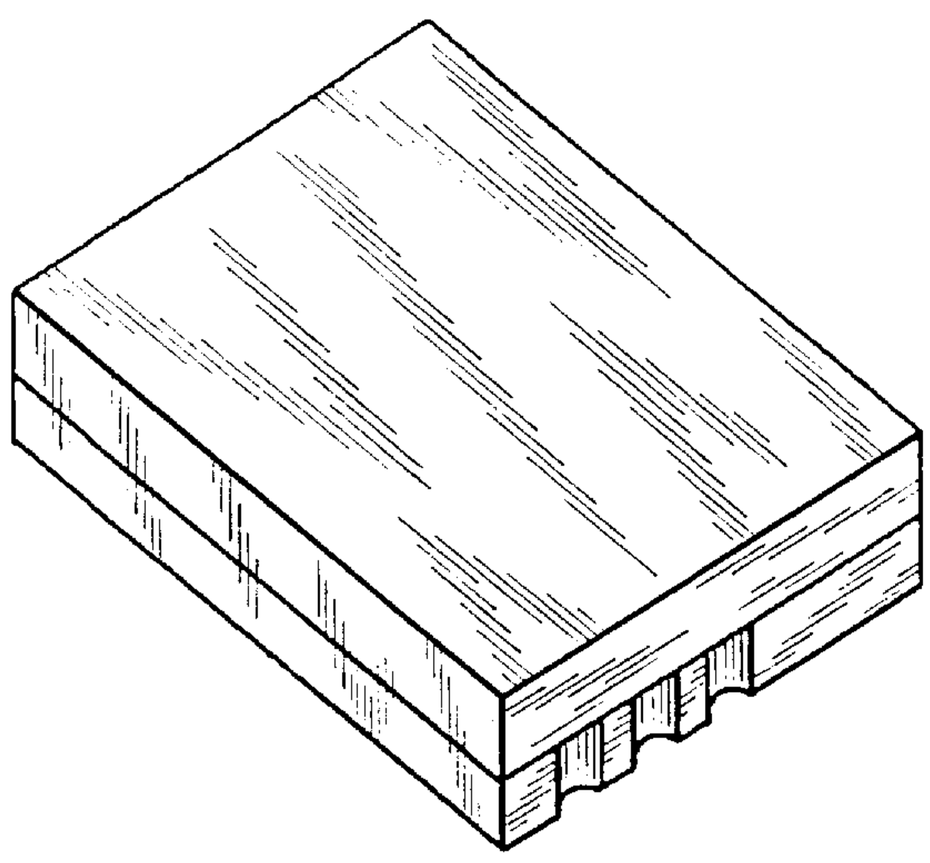

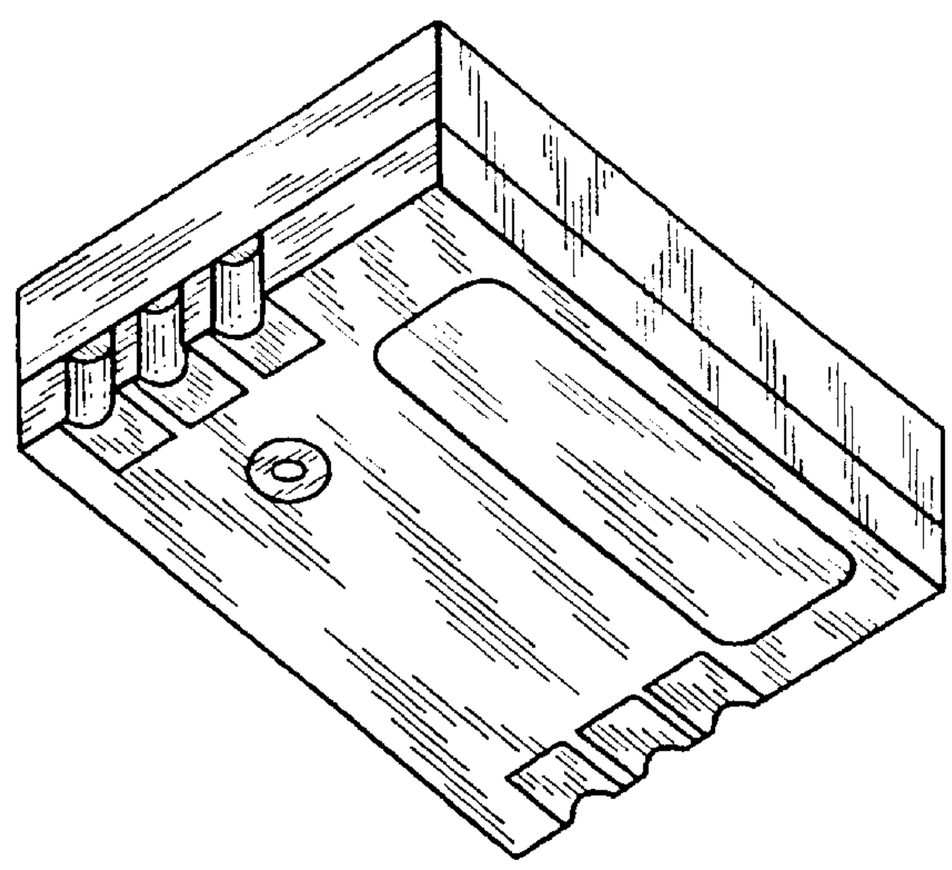

FIG. 2

FIG. 4

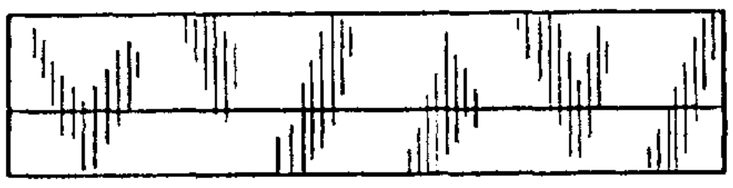

FIG. 1

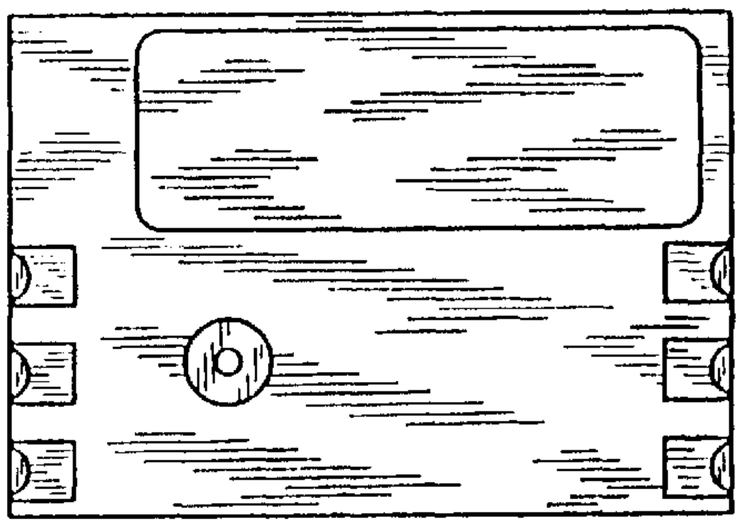

FIG. 3

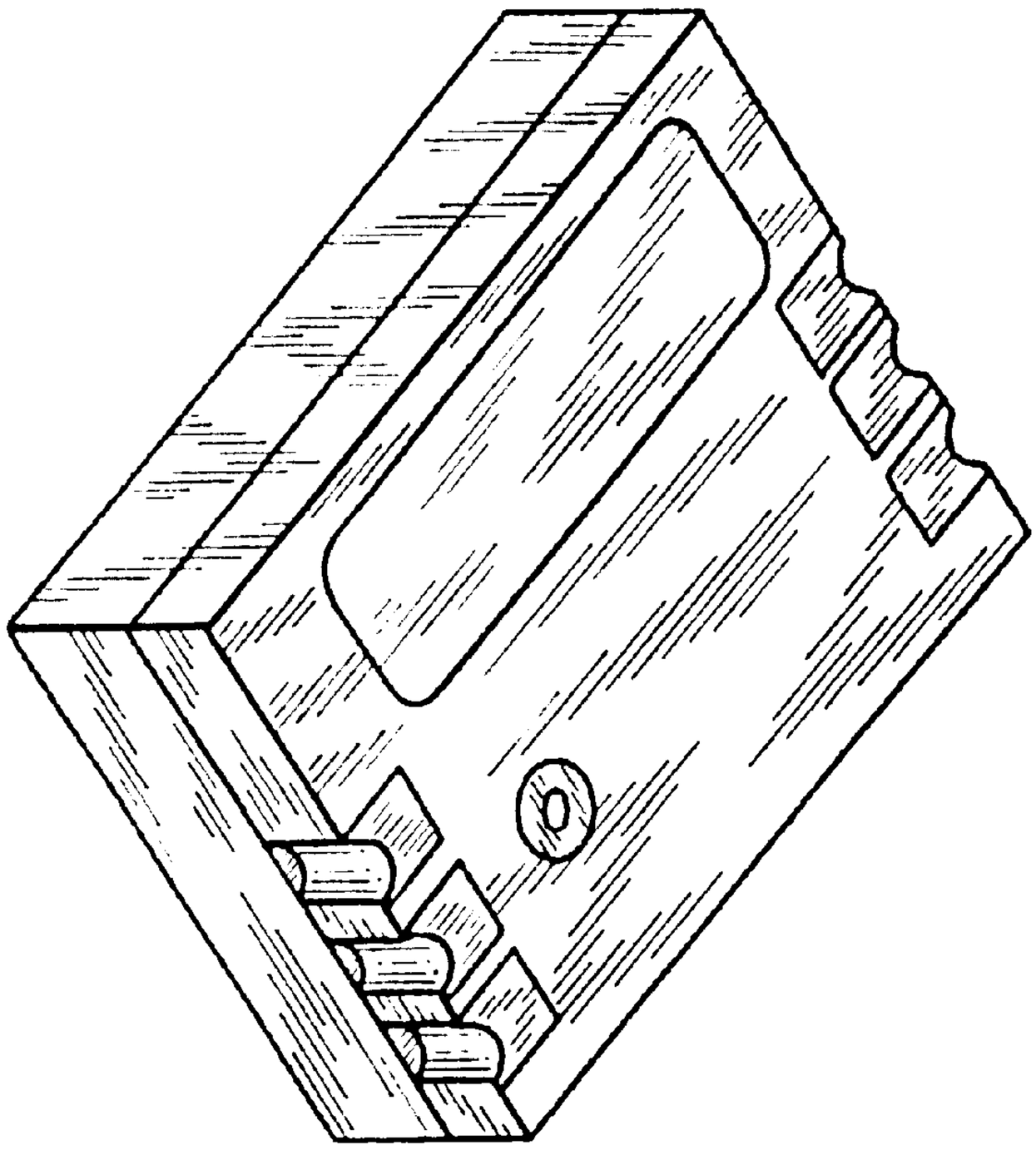

FIG. 6

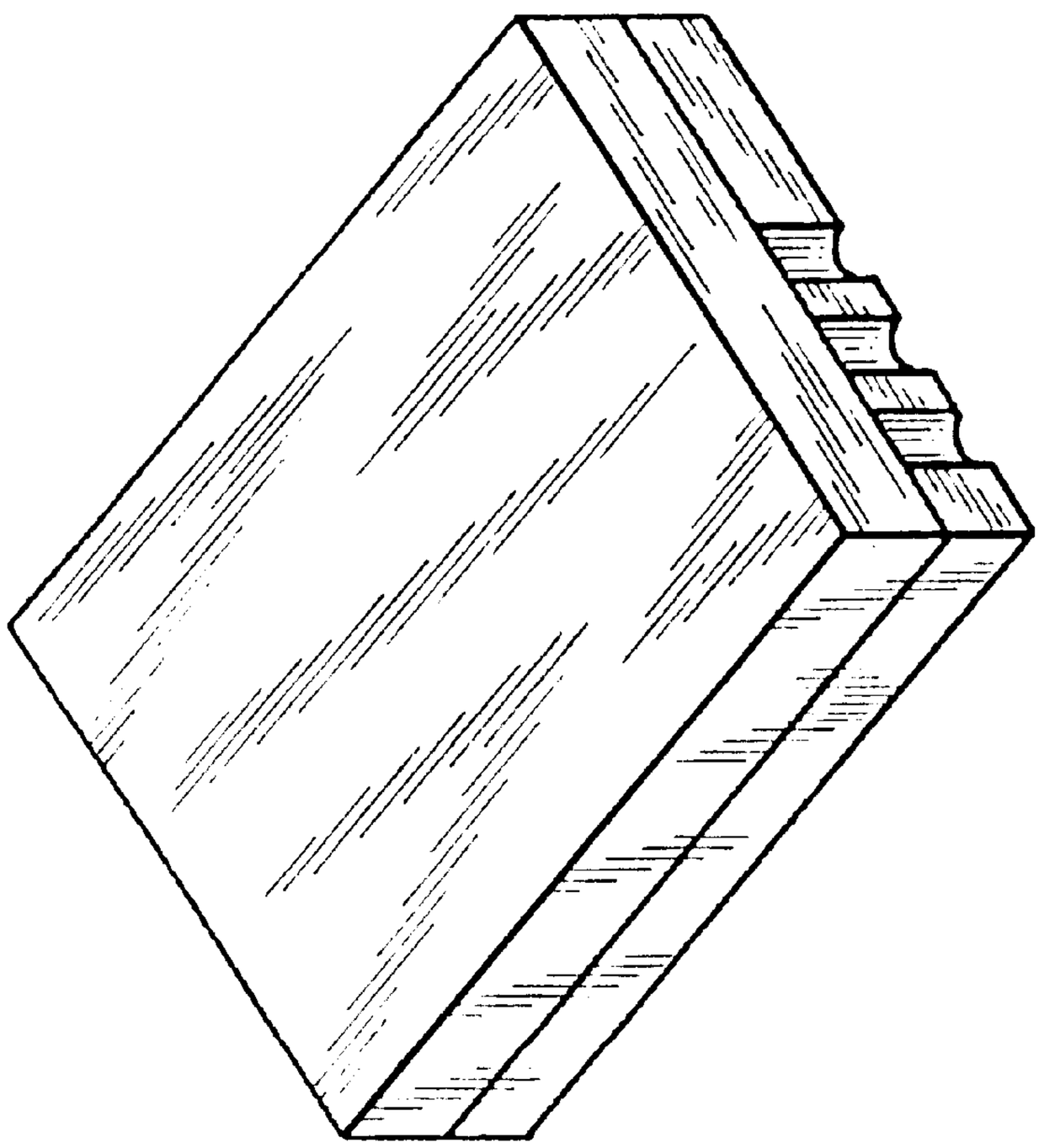

FIG. 5