US00D415744S

United States Patent [19]

Carter et al.

[11] Patent Number: Des. 415,744

[45] Date of Patent: ** Oct. 26, 1999

[54] **FLAT SCREEN MONITOR WITH MULTIPLE SCREENS**

[75] Inventors: **D. Geoffry R. Carter**; **Gregory S. Giroux**, both of Fresno, Calif.

[73] Assignee: **Pelco**, Clovis, Calif.

[**] Term: **14 Years**

[21] Appl. No.: **29/089,232**

[22] Filed: **Jun. 10, 1998**

[51] **LOC (6) Cl.** **14-02**

[52] **U.S. Cl.** **D14/113**; D14/127

[58] **Field of Search** D14/100, 101, D14/106, 113, 124–129; 248/917–924; 341/12; 348/180, 184, 325, 739, 36; 345/104, 133, 156, 168, 87, 173, 901–905; 349/62; 361/687

[56] **References Cited**

U.S. PATENT DOCUMENTS

D. 169,363	4/1953	Ellison	D14/127
D. 213,592	3/1969	Anders	D14/127
D. 353,586	12/1994	Renk	D14/126
D. 356,080	3/1995	Goldfarb	D14/127
4,635,105	1/1987	Favreau	358/67
4,746,981	5/1988	Nadan	358/160
4,800,376	1/1989	Suga	340/721
4,833,542	5/1989	Hara	358/230
4,884,068	11/1989	Matheny	340/707
5,010,413	4/1991	Bahr	358/242
5,619,255	4/1997	Booth	348/36

Primary Examiner—Freda Nunn

Attorney, Agent, or Firm—Prince, Yeates & Geldzahler

[57] **CLAIM**

We claim the ornamental design for a flat screen monitor with multiple screens, as shown.

DESCRIPTION

FIG. **1** is a perspective view of the flat screen monitor with multiple screens;
FIG. **2** is a front elevational view thereof;
FIG. **3** is a rear elevational view thereof;
FIG. **4** is a left-side elevational view thereof;
FIG. **5** is a right-side elevational view thereof;
FIG. **6** is a top plan view thereof; and,
FIG. **7** is a bottom plan view thereof.

1 Claim, 4 Drawing Sheets

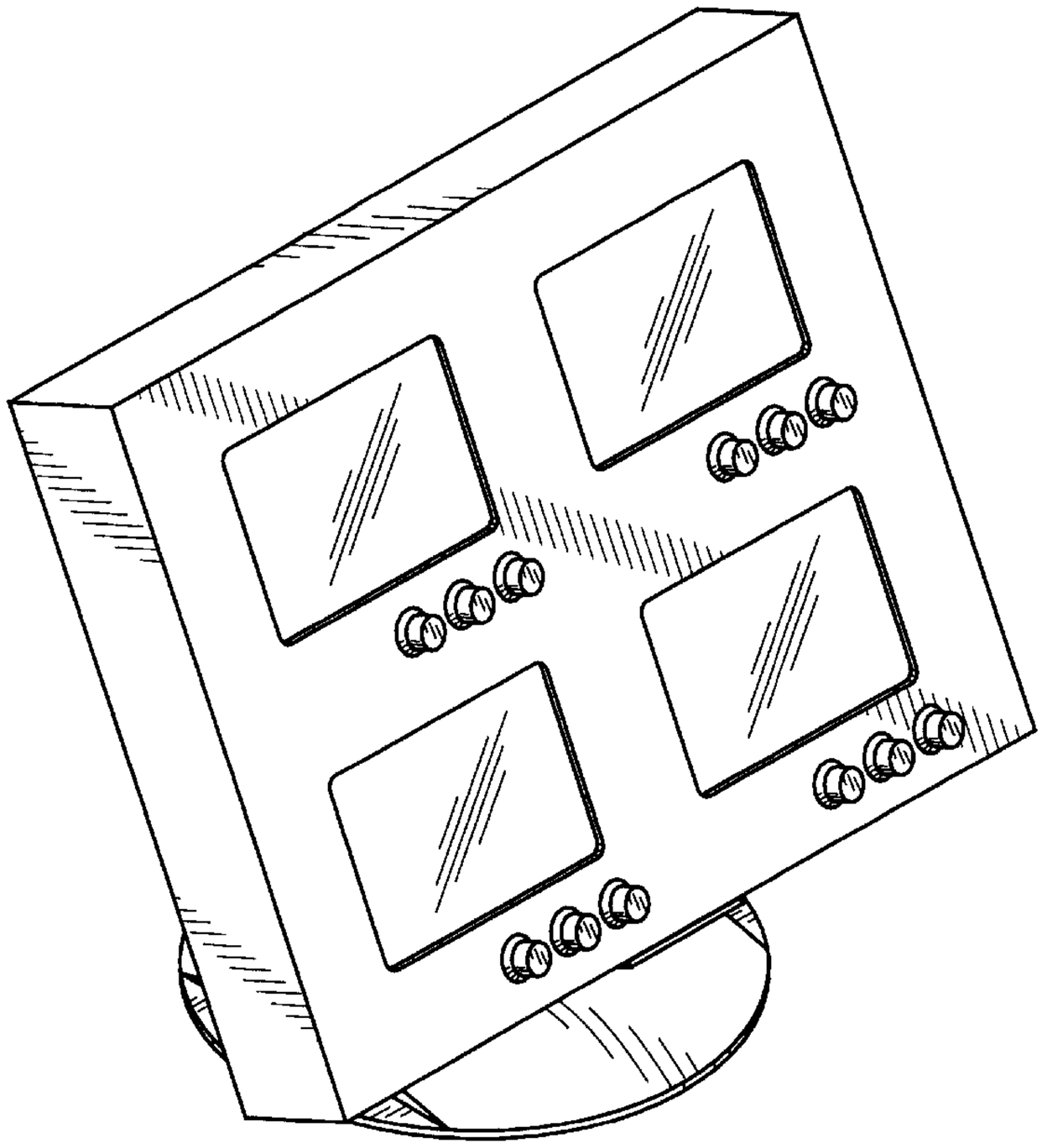

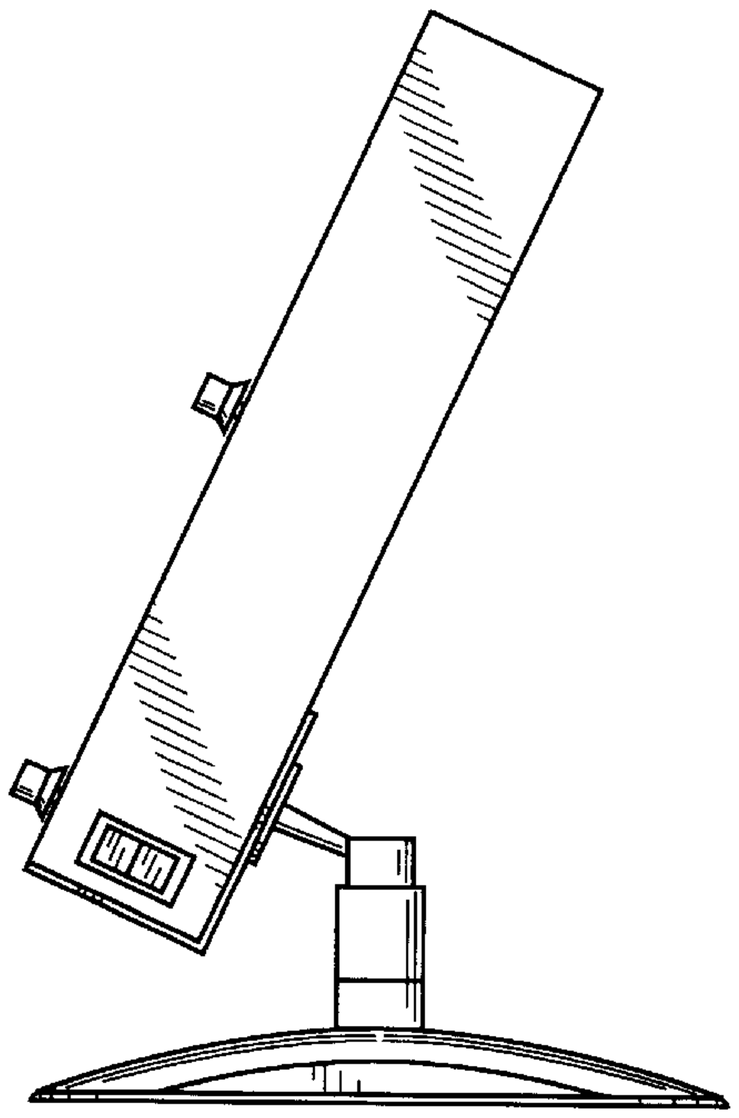

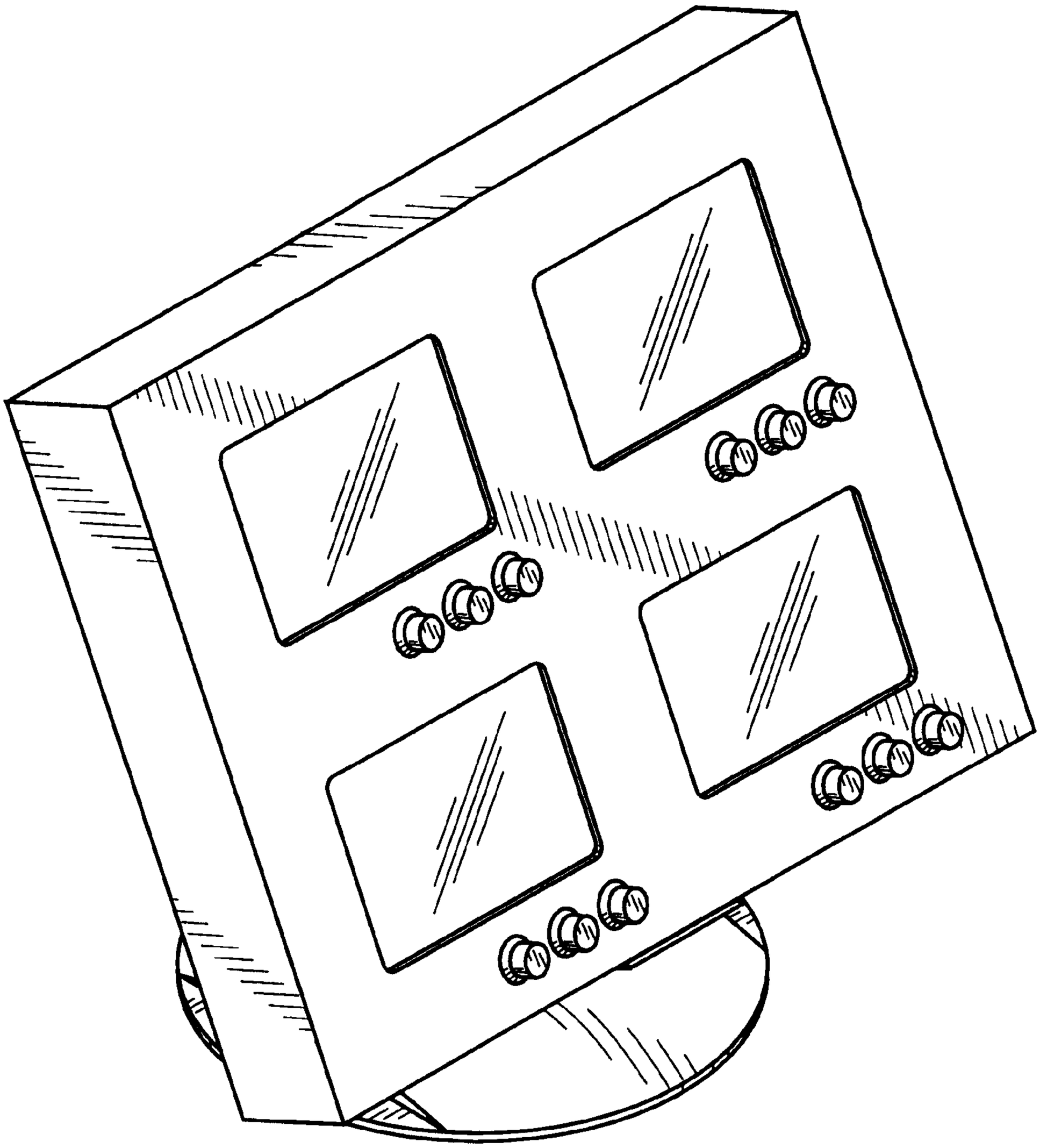

Fig. 1

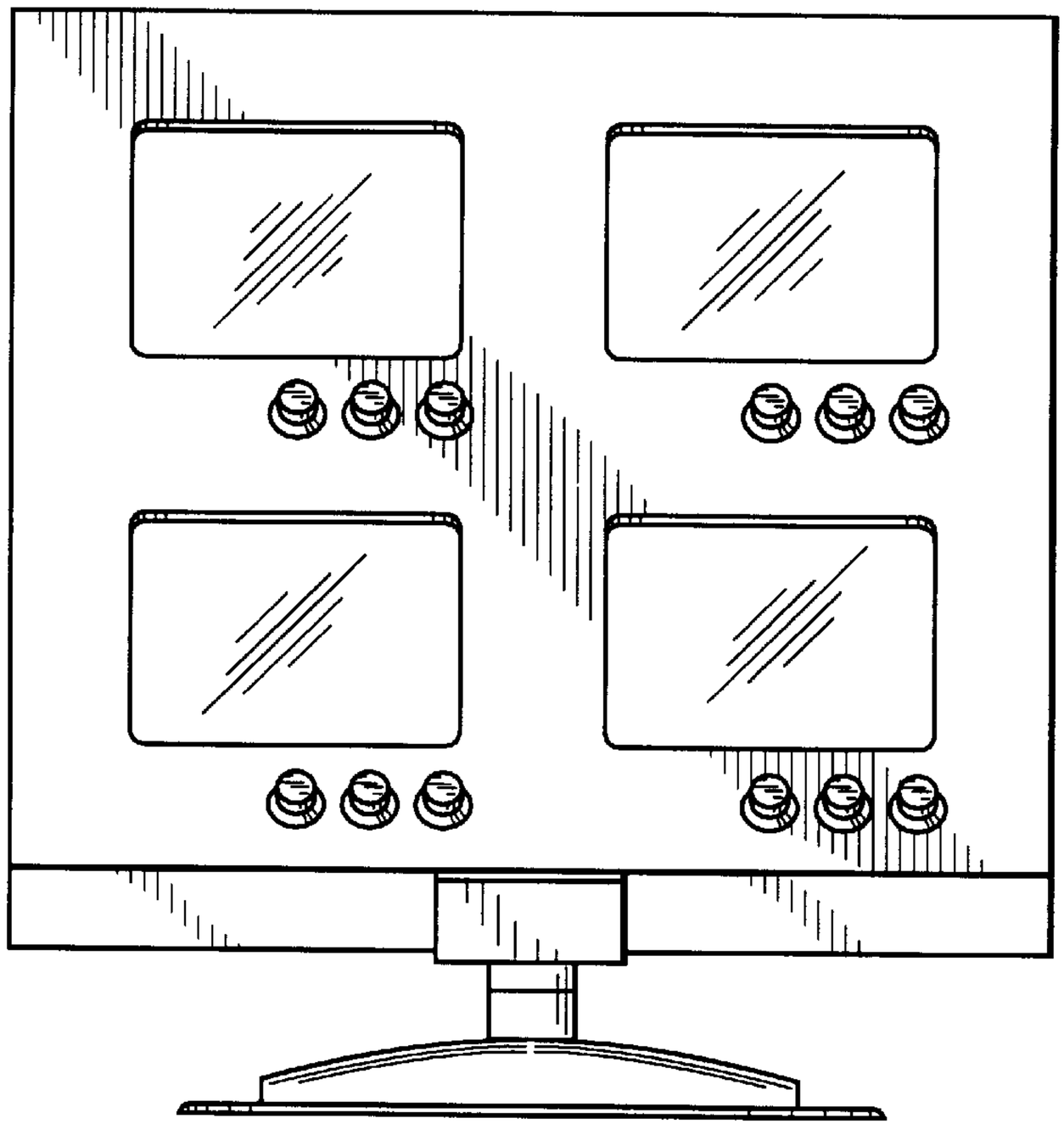

Fig. 2

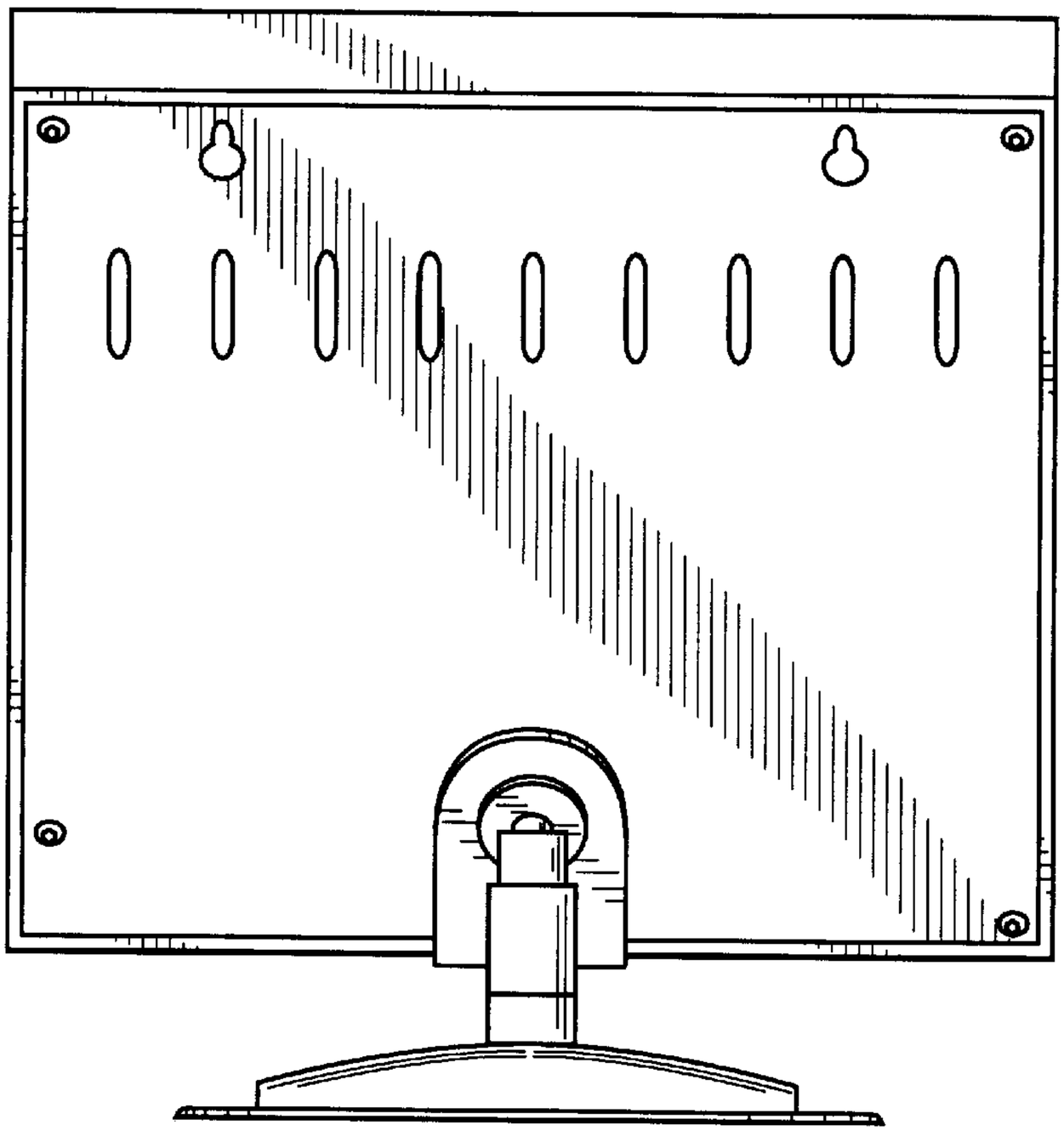

Fig. 3

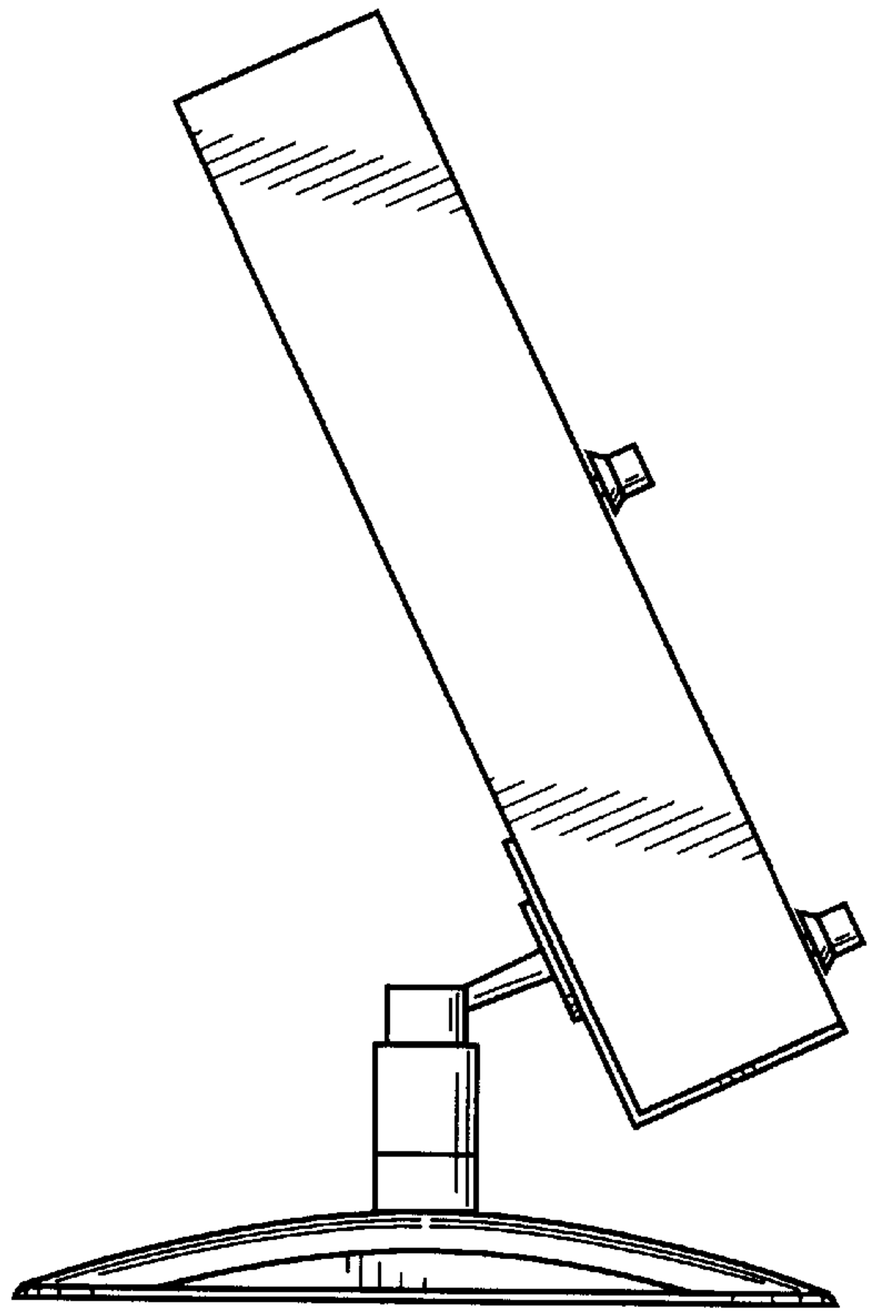

Fig. 4

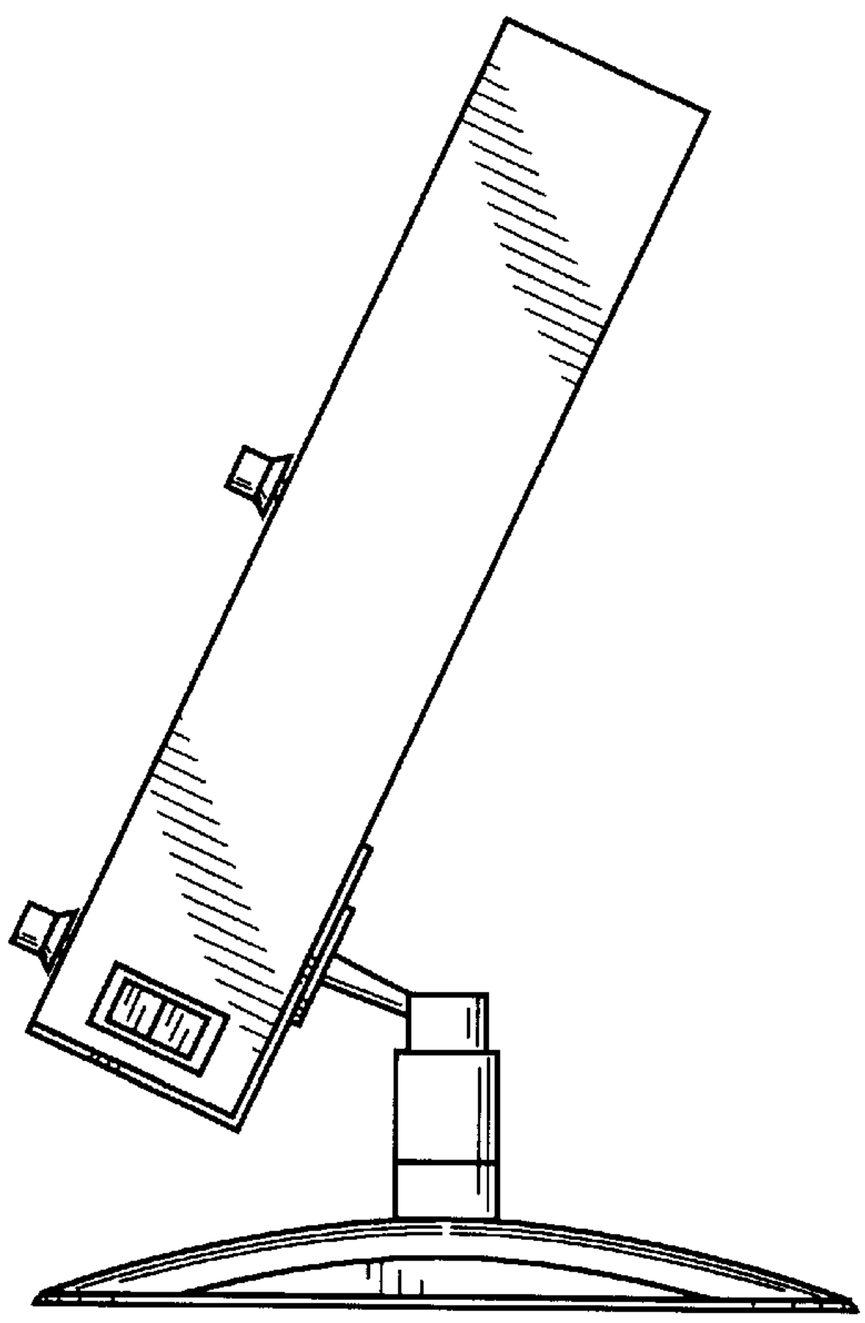

Fig. 5

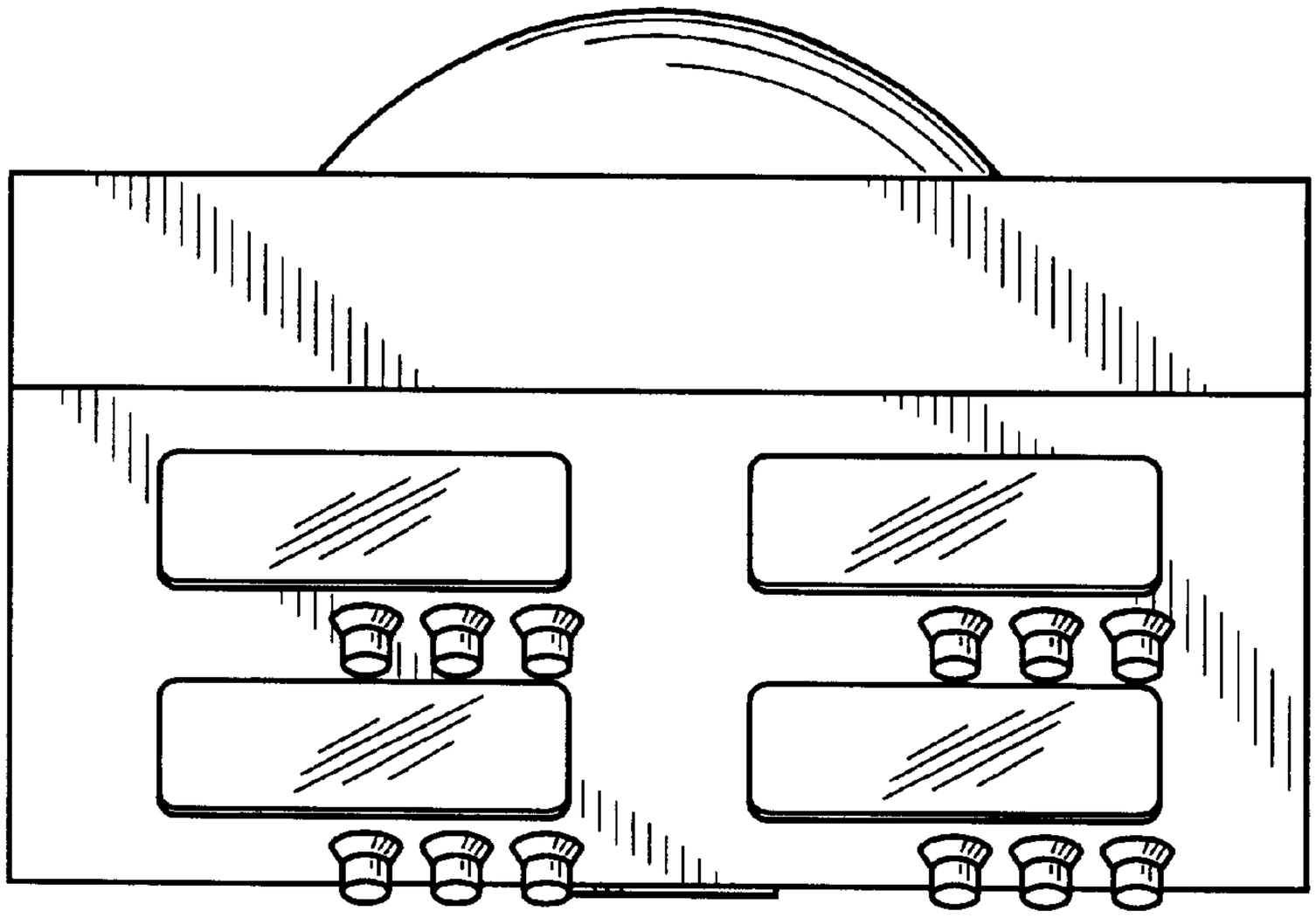

Fig. 6

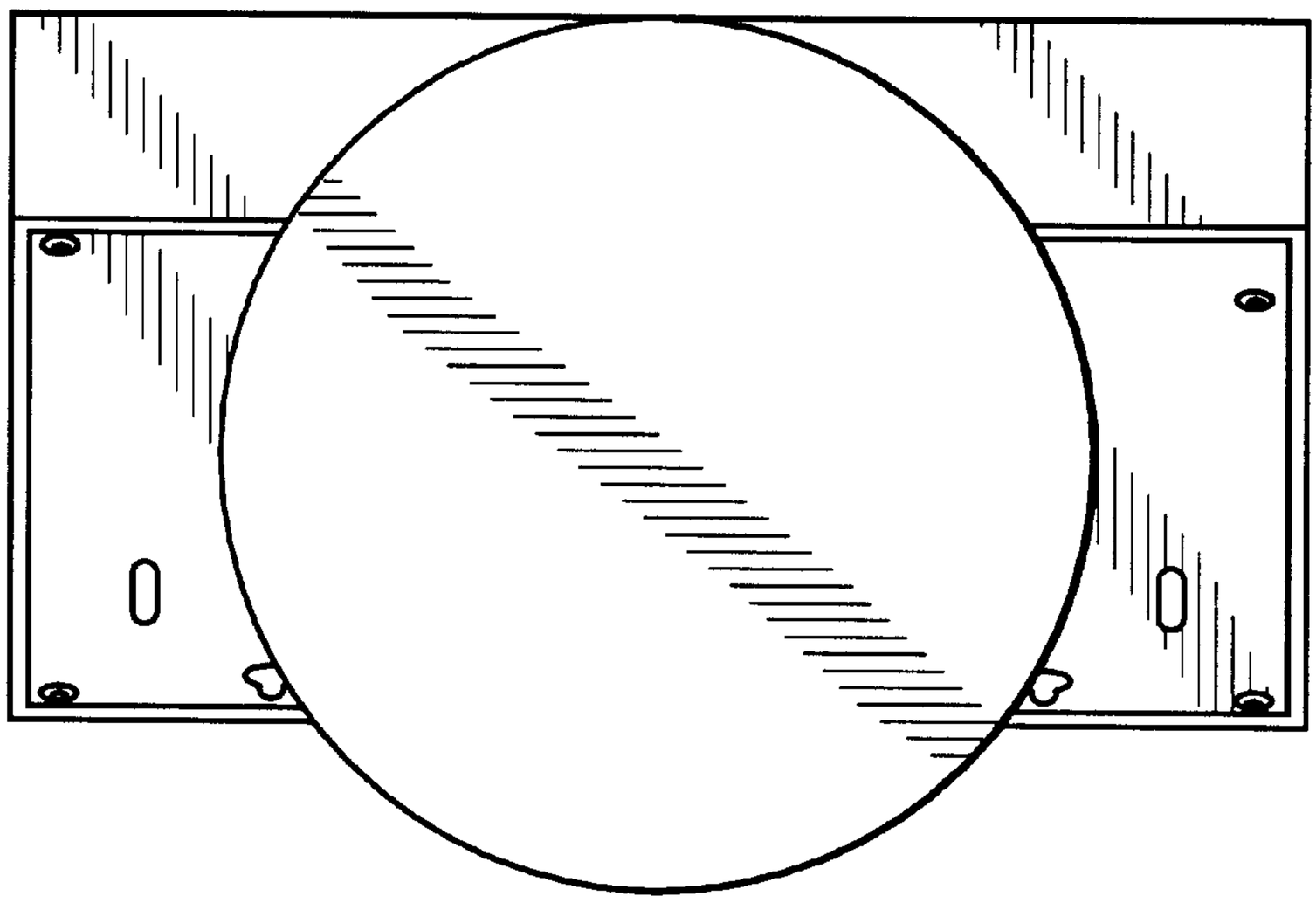

Fig. 7