US00D413676S

United States Patent [19]

Lippoldt

[11] Patent Number: Des. 413,676

[45] Date of Patent: ** Sep. 7, 1999

[54] **CENTRIFUGE**

[75] Inventor: **Roland Lippoldt**, Engelsdorf, Germany

[73] Assignee: **Eppendorf-Netheler-Hinz GmbH**, Germany

[**] Term: **14 Years**

[21] Appl. No.: **29/086,162**

[22] Filed: **Apr. 7, 1998**

[30] **Foreign Application Priority Data**

Oct. 10, 1997 [XH] Hague Agreement DM/041690

[51] **LOC (6) Cl.** **24-01**

[52] **U.S. Cl.** **D24/219**

[58] **Field of Search** D24/219; 422/72, 422/64; 494/40, 26, 9, 8

[56] **References Cited**

U.S. PATENT DOCUMENTS

D. 329,902 9/1992 Kim D24/219

D. 335,930 5/1993 Tominaga D24/219

Primary Examiner—Doris Clark
Assistant Examiner—I Simmons
Attorney, Agent, or Firm—Samuels, Gauthier & Stevens

[57] **CLAIM**

The ornamental design for a centrifuge, as shown and described.

DESCRIPTION

FIG. **1** is a front elevational view of a centrifuge showing my new design;

FIG. **2** is a left elevational view thereof;

FIG. **3** is a right elevational view thereof;

FIG. **4** is a top plan view thereof;

FIG. **5** is a rear elevational view thereof; and,

FIG. **6** is a bottom plan view thereof.

1 Claim, 6 Drawing Sheets

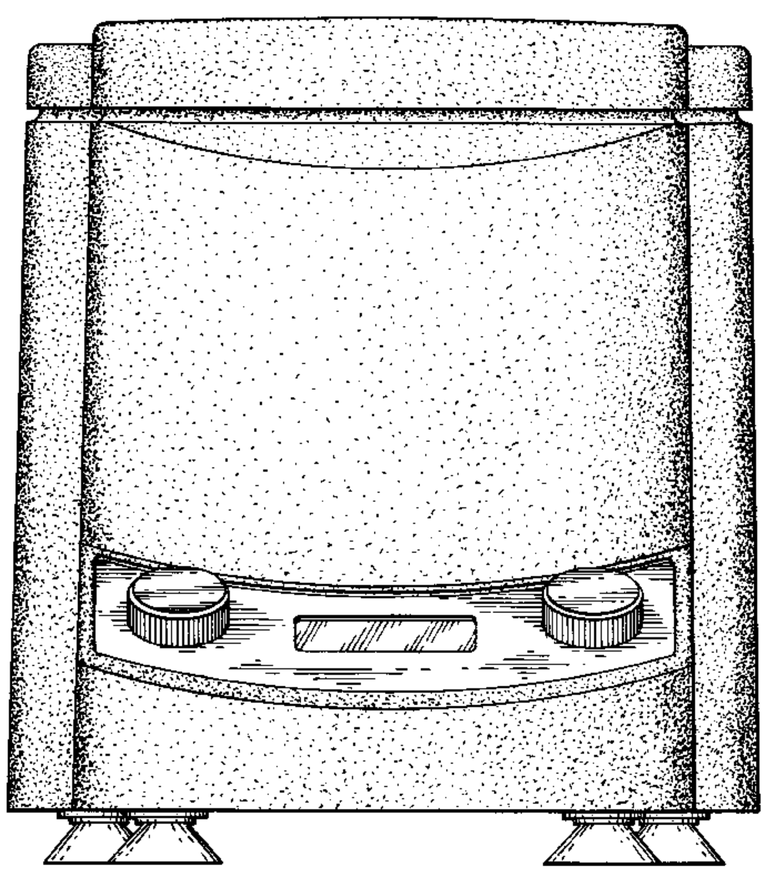

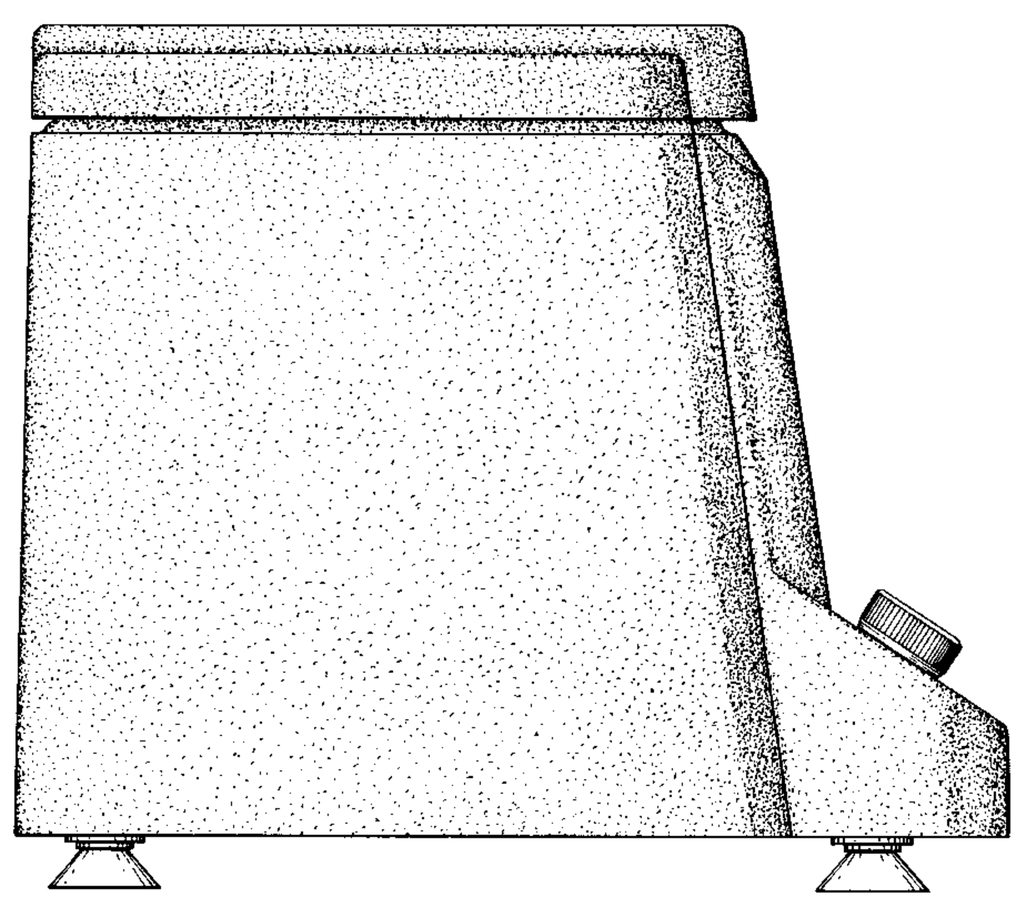

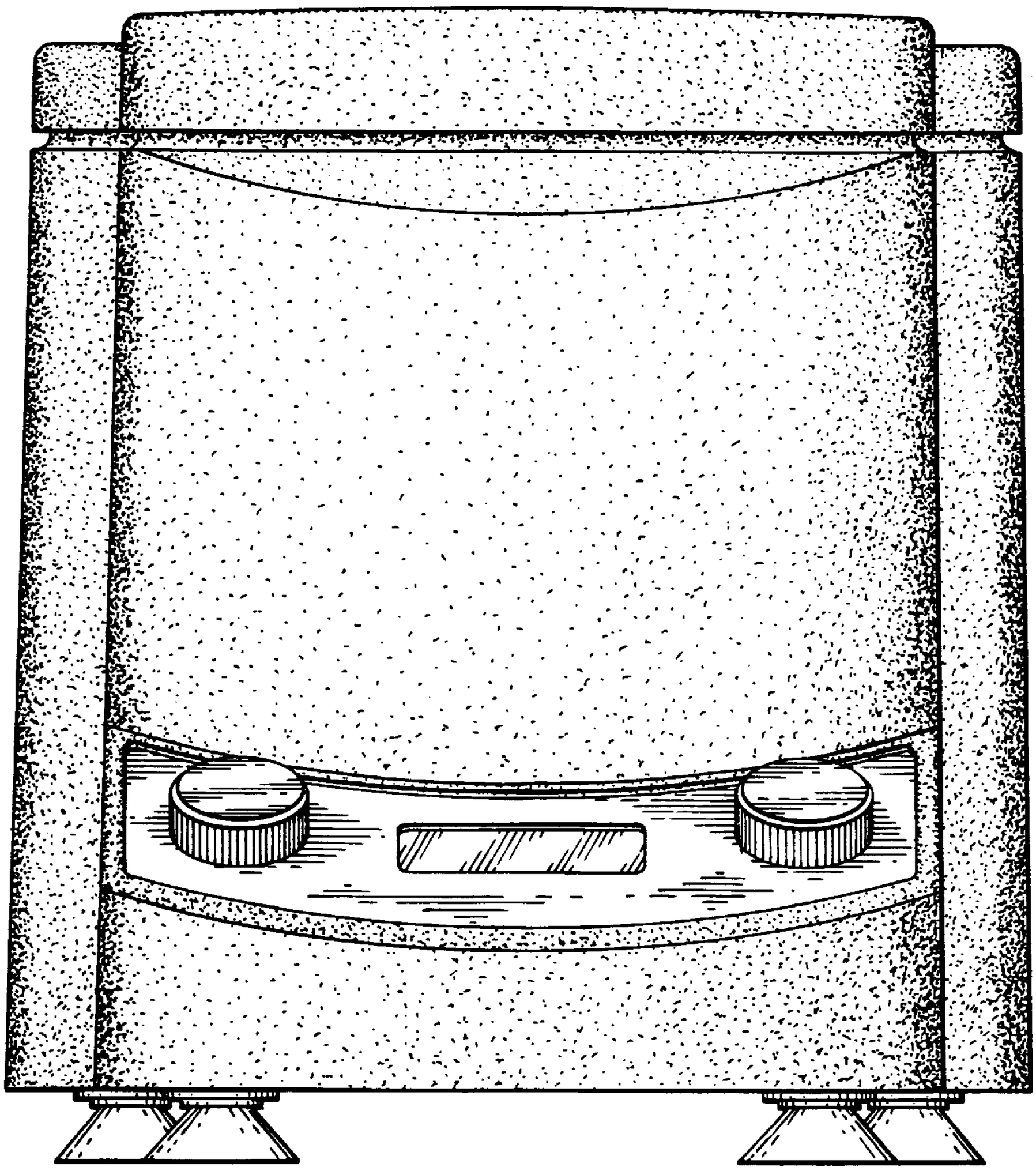

FIG. 1

FIG. 2

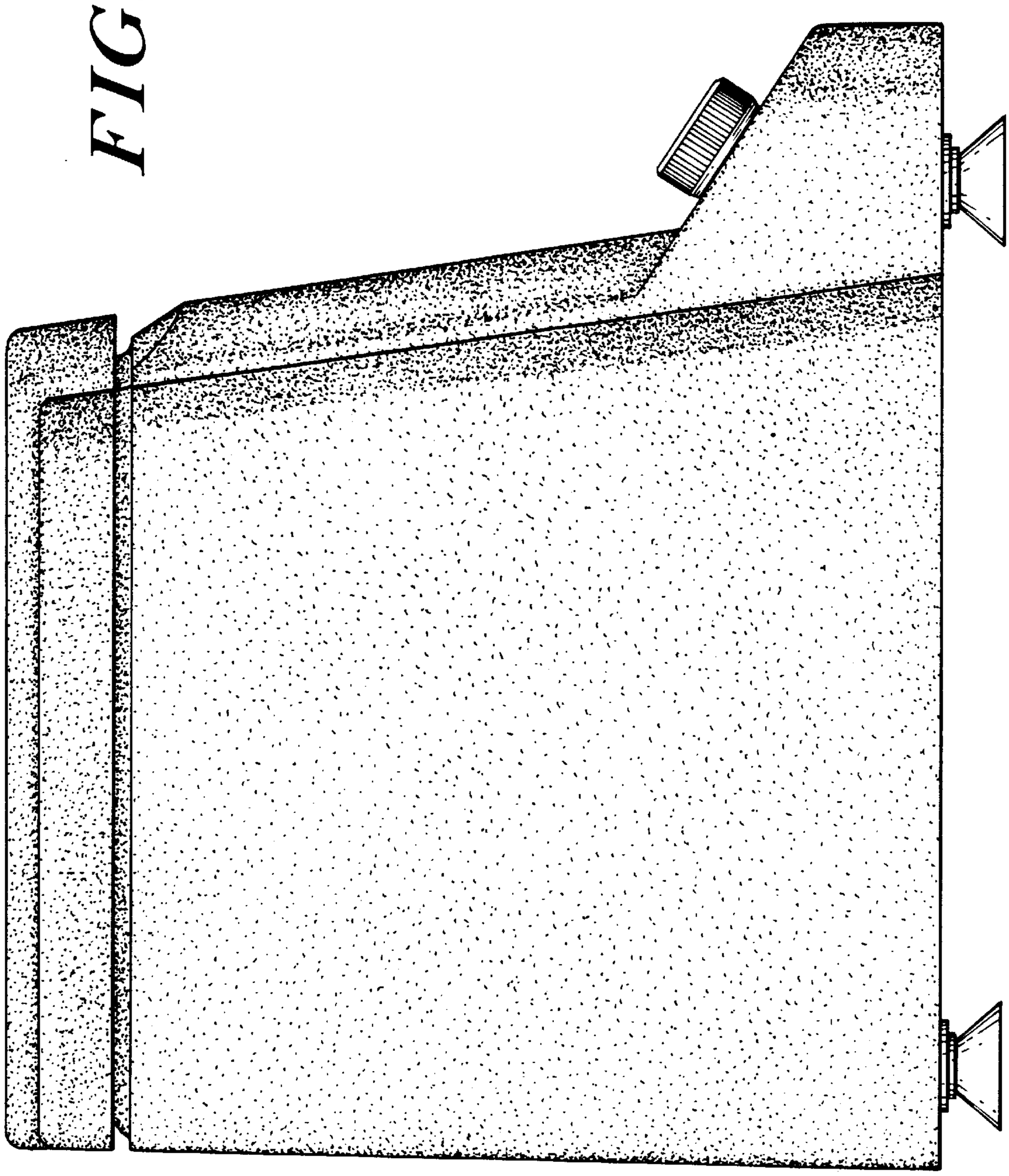

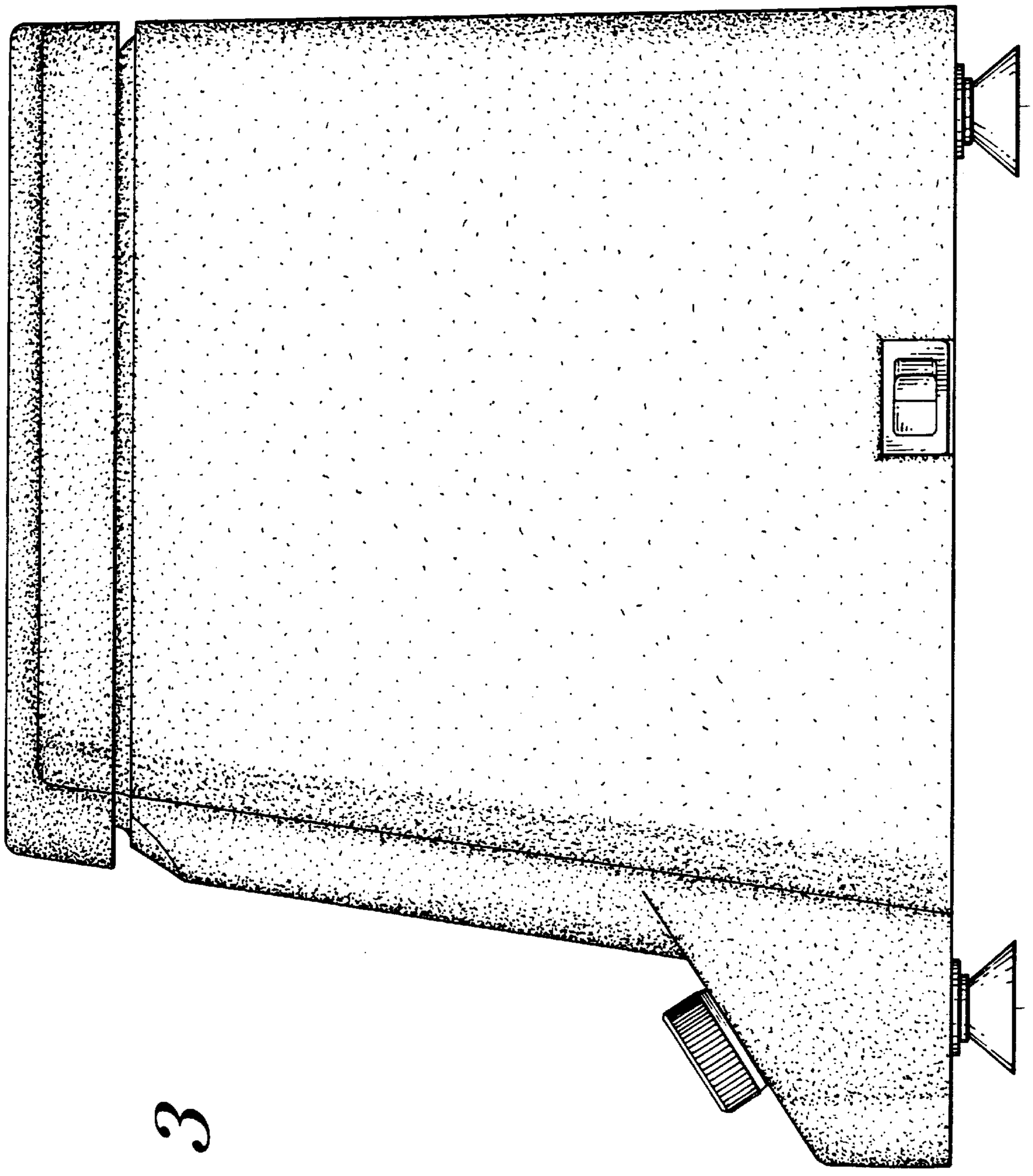

FIG. 3

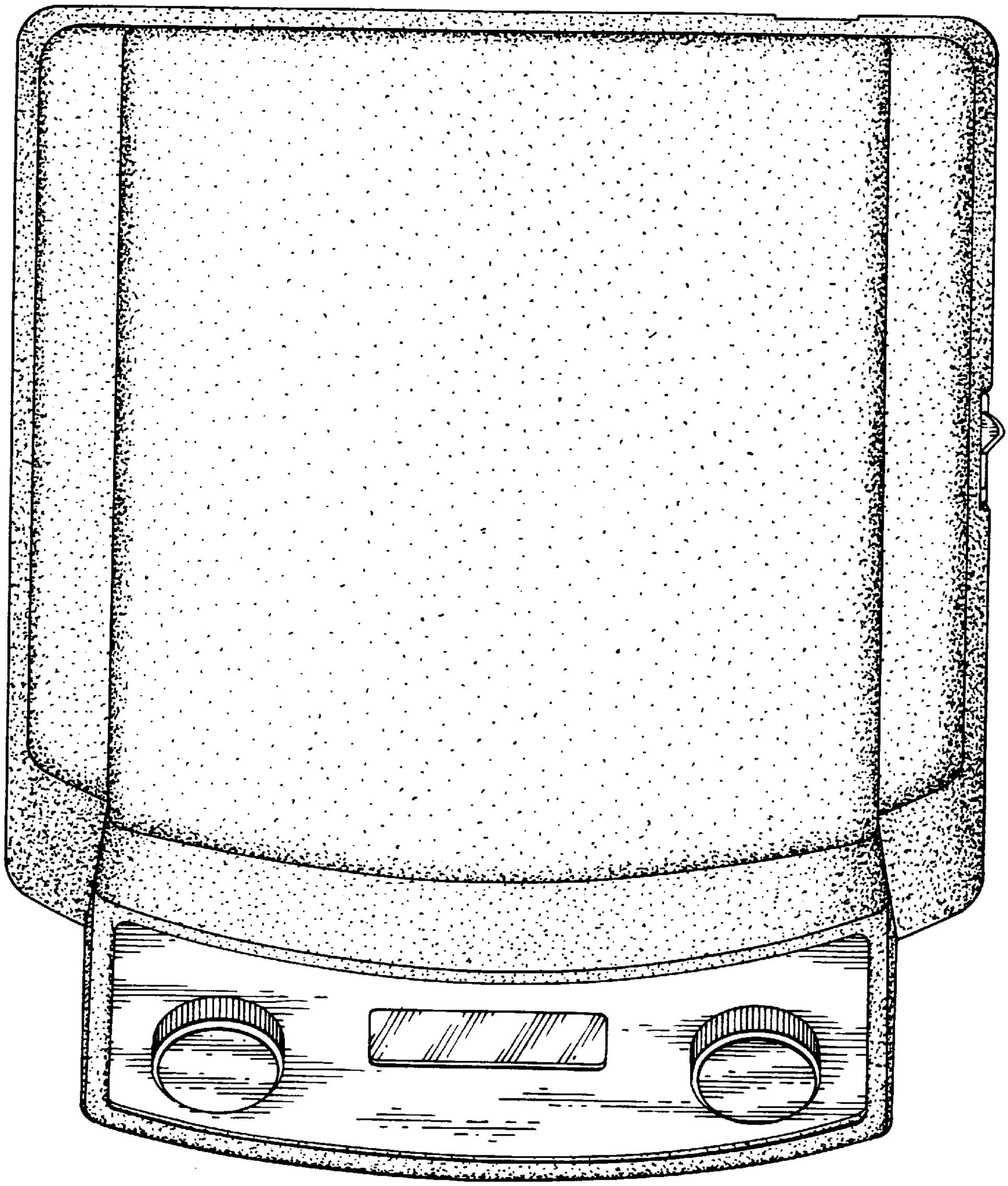

FIG. 4

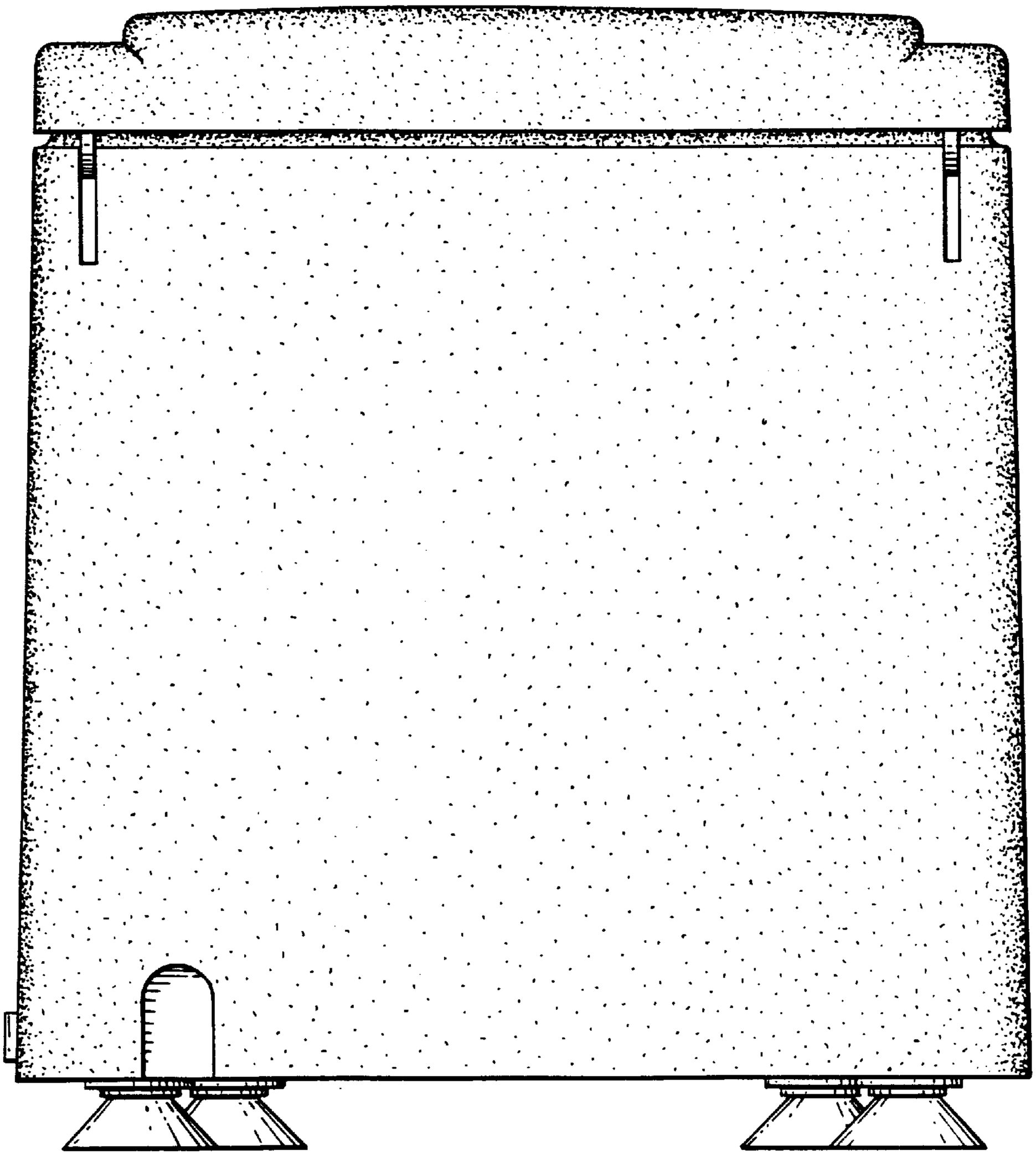

FIG. 5

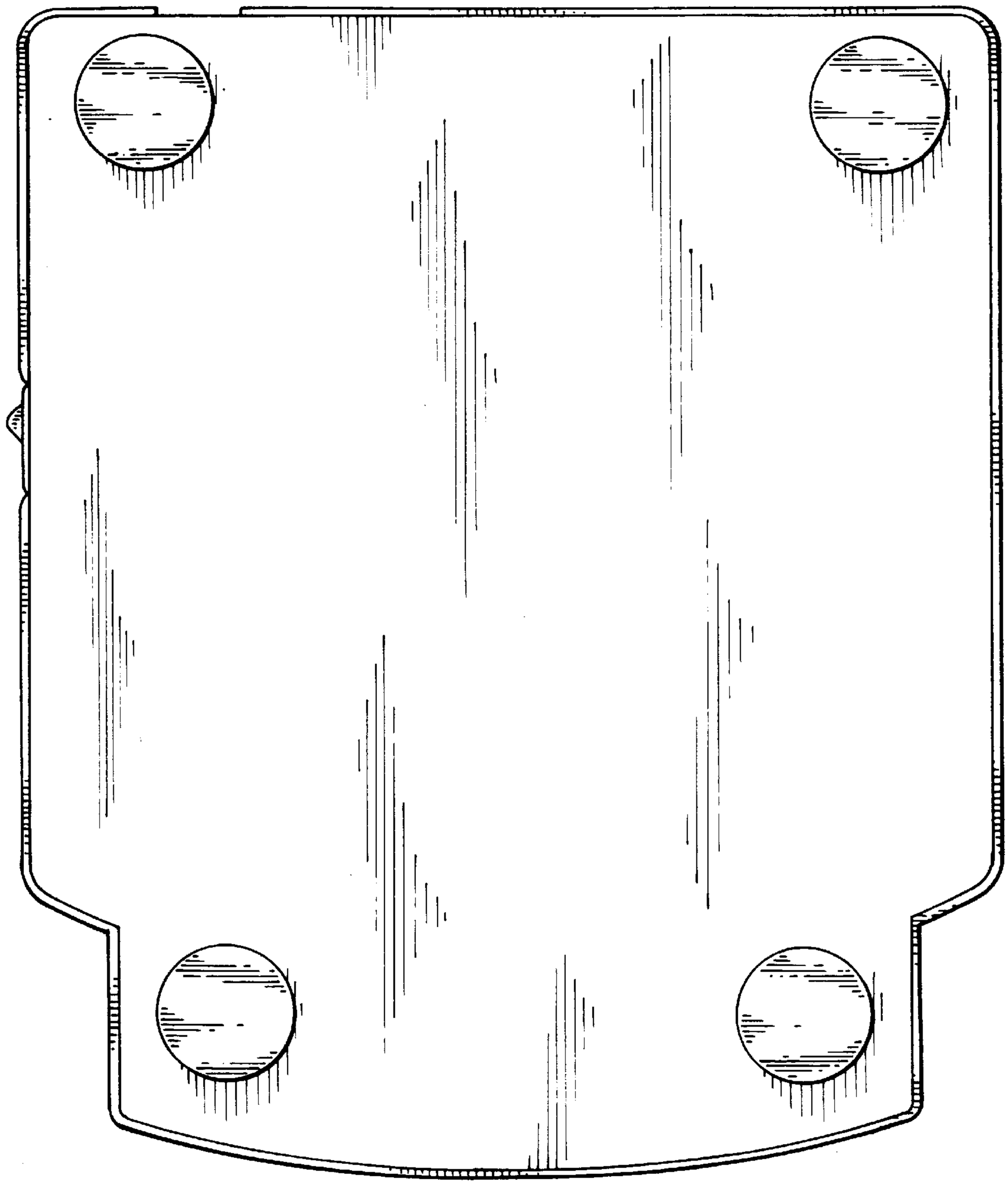

FIG. 6