US00D409681S

United States Patent [19]

Poulsen

[11] Patent Number: Des. 409,681

[45] Date of Patent: ** May 11, 1999

[54] **TOY BUILDING ELEMENT**

[75] Inventor: **Ole Vestergaard Poulsen**, Vejle, Denmark

[73] Assignee: **INTERLEGO AG**, Baar, Switzerland

[**] Term: **14 Years**

[21] Appl. No.: **29/093,742**

[22] Filed: **Sep. 17, 1998**

[30] **Foreign Application Priority Data**

Mar. 18, 1998 [DK] Denmark ..... MA 0297 1998

[51] **LOC (6) Cl.** **21-01**

[52] **U.S. Cl.** **D21/502**; D21/503

[58] **Field of Search** D21/483–505; D25/113–118; 446/85, 93–96, 102–107, 110–113, 120–122, 124, 128

[56] **References Cited**

U.S. PATENT DOCUMENTS

D. 149,347	4/1948	Geib	D21/503
D. 159,255	7/1950	Decker, Sr. et al.	D25/114
D. 304,221	10/1989	Poulsen .	
D. 317,955	7/1991	Olsen	D21/502
D. 332,641	1/1993	Skov	D21/504
D. 355,454	2/1995	Glynn	D21/486
D. 374,257	10/1996	Schmidt et al.	D21/486
D. 374,465	10/1996	Schmidt	D21/486
3,611,609	10/1971	Reijnhard	446/128
4,547,160	10/1985	LaBelle	446/103
4,690,656	9/1987	Friedman	446/95
4,998,903	3/1991	Bolli et al.	446/121
5,645,463	7/1997	Olsen	446/104

Primary Examiner—Raphael Barkai
Attorney, Agent, or Firm—Kane,Dalsimer,Sullivan, Kurucz, Levy, Eisele and Richard, LLP

[57] **CLAIM**

The ornamental design for a toy building element, as shown and described.

DESCRIPTION

FIG. **1** is a top perspective view of the toy building element,
FIG. **2** is a top plan view thereof,
FIG. **3** is a front elevational view thereof,
FIG. **4** is a bottom plan view thereof,
FIG. **5** is a right side elevational view thereof,
FIG. **6** is a left side elevational view thereof,
FIG. **7** is a rear elevational view thereof; and,
FIG. **8** is a bottom perspective view thereof.

1 Claim, 4 Drawing Sheets

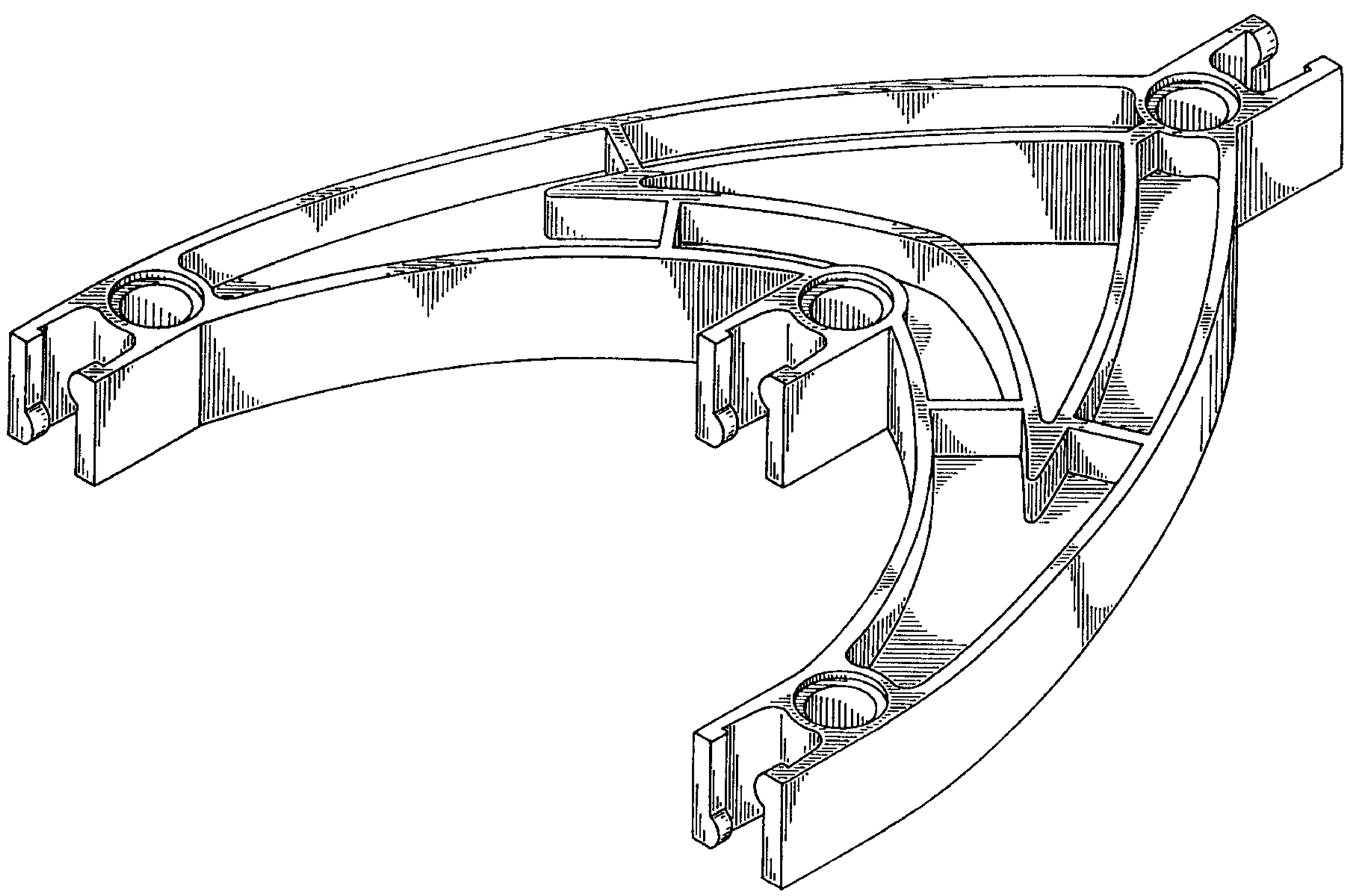

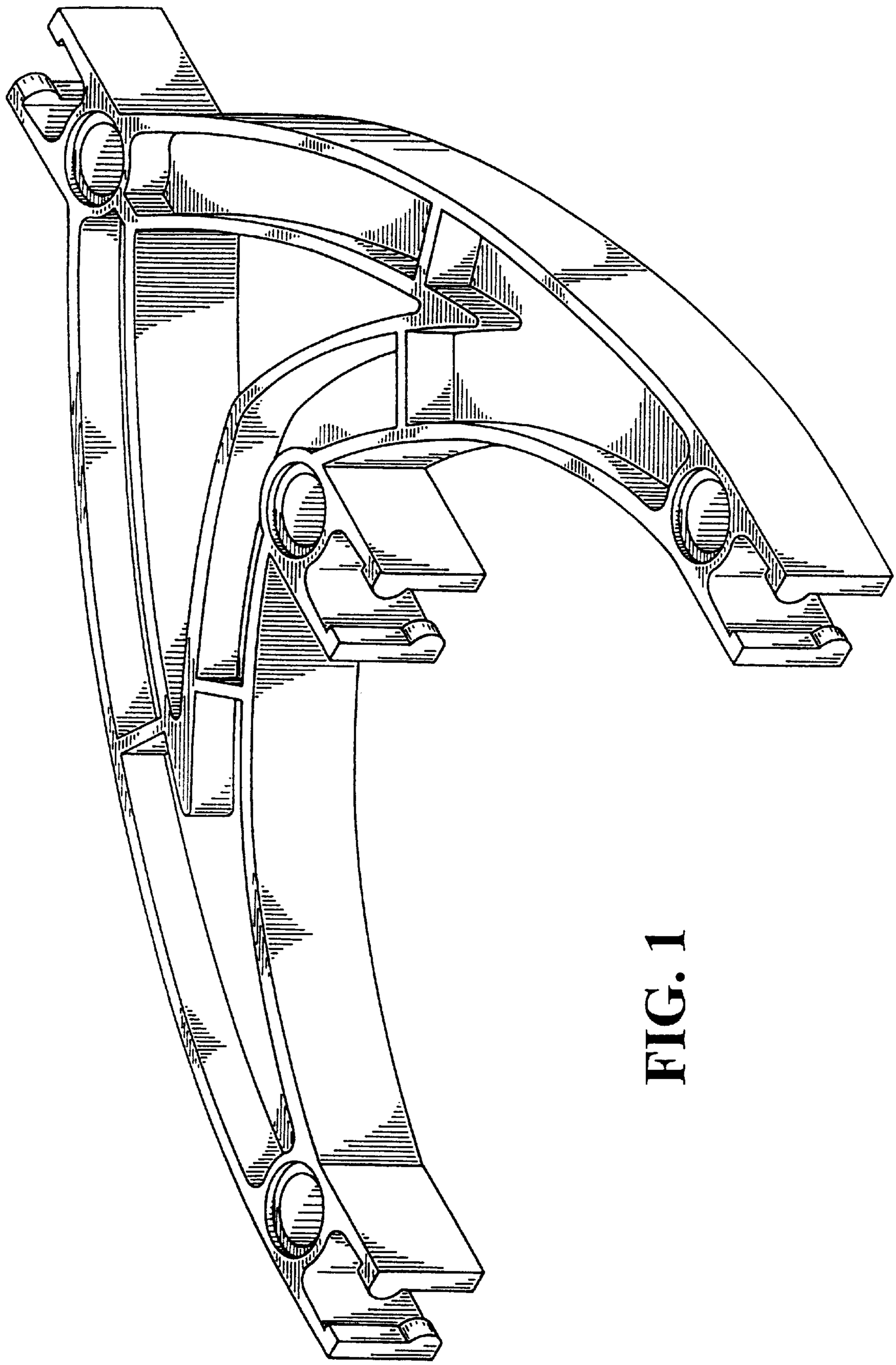

FIG. 1

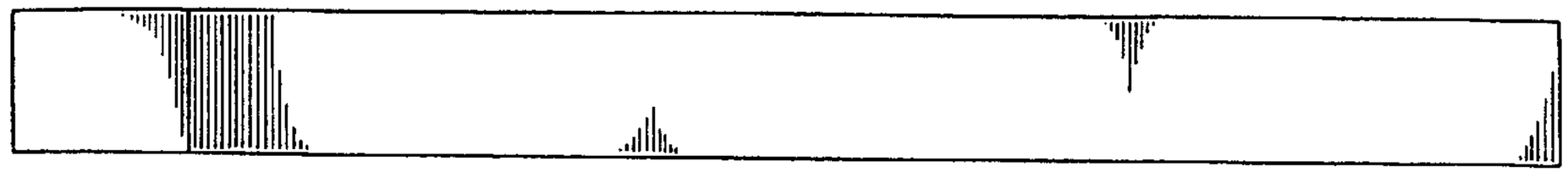

FIG. 6

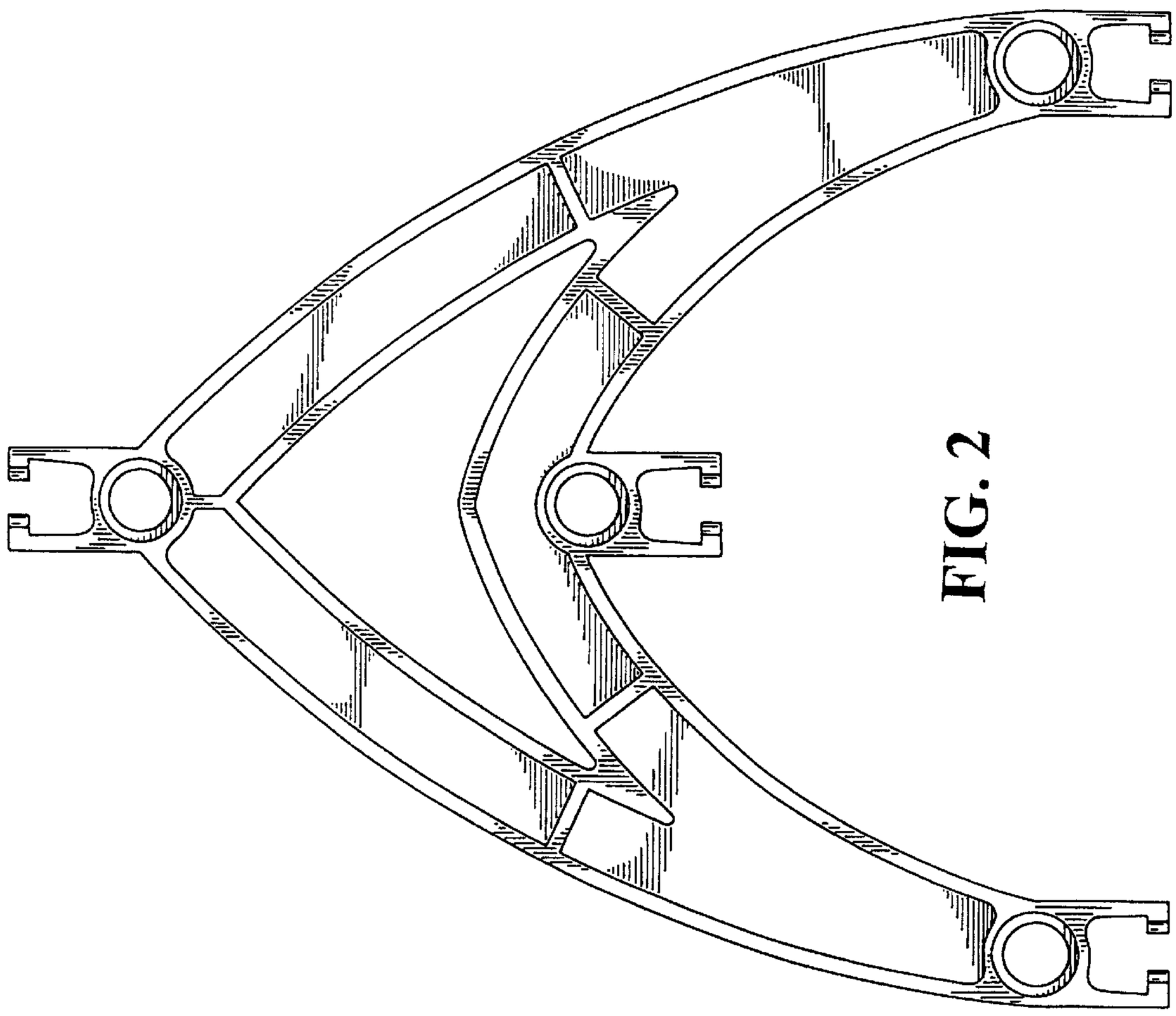

FIG. 2

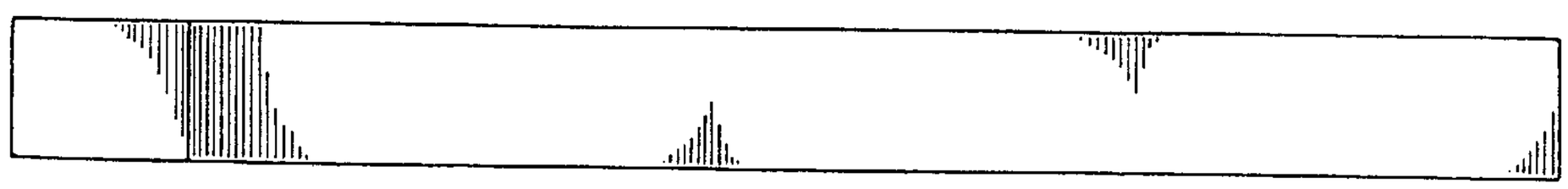

FIG. 5

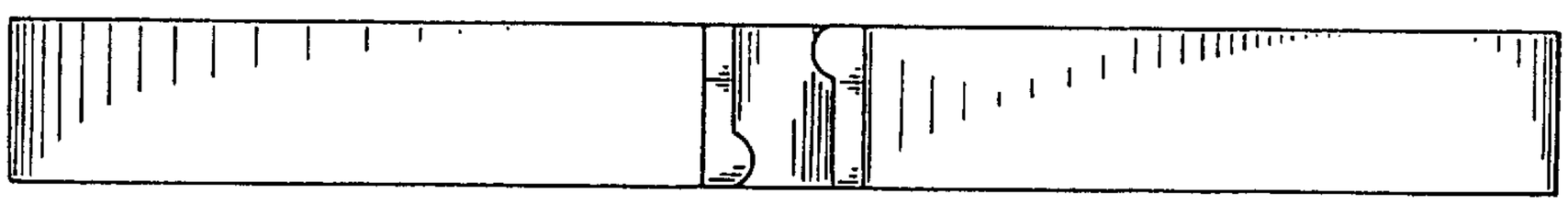

FIG. 7

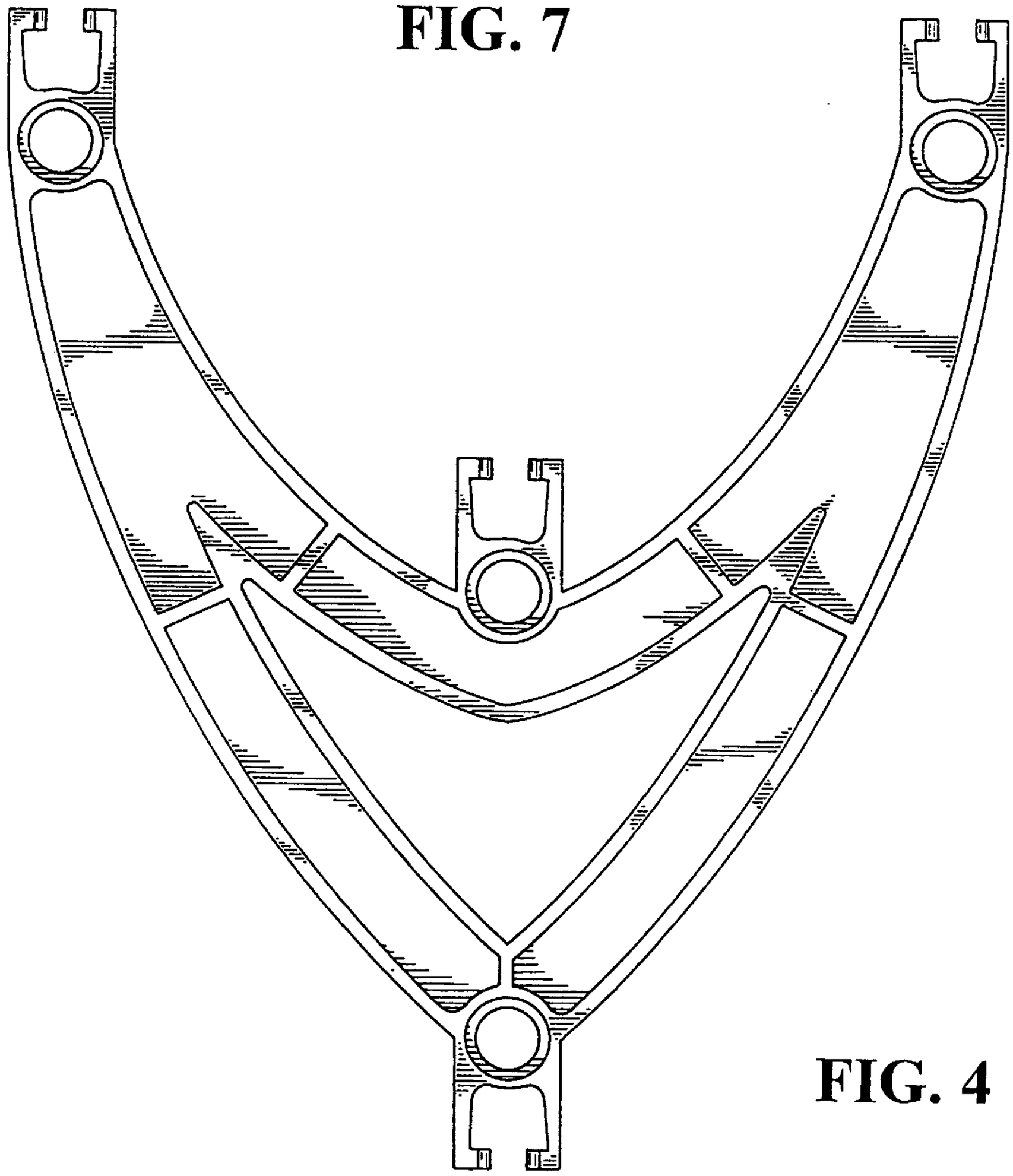

FIG. 4

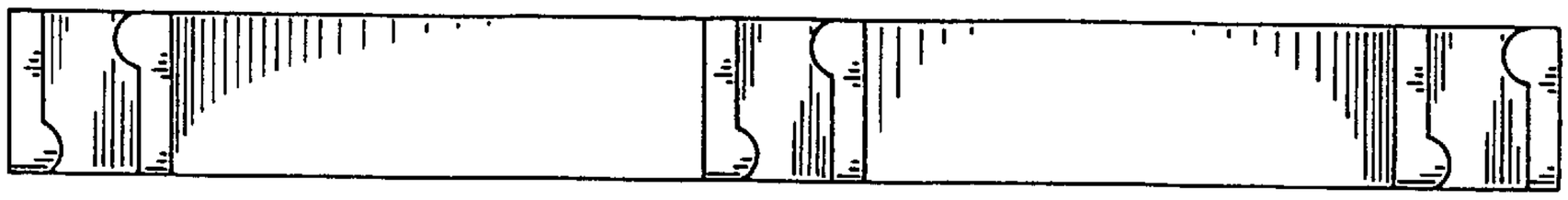

FIG. 3

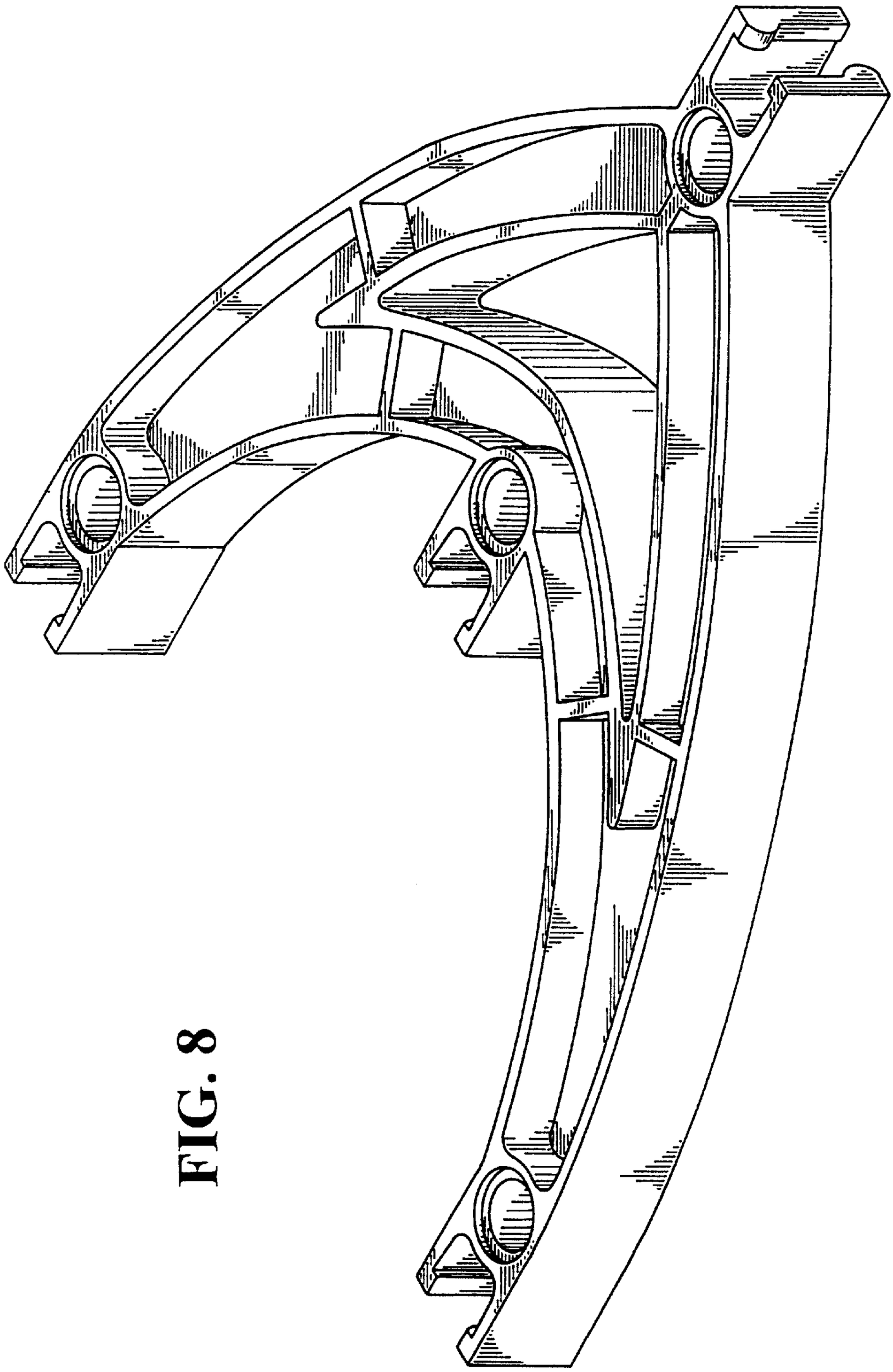

FIG. 8