US00D407504S

United States Patent [19]

Hersh et al.

[11] Patent Number: Des. 407,504

[45] Date of Patent: **Mar. 30, 1999

[54] **WINDOW COMPONENT EXTRUSION**

[75] Inventors: **Jeffrey B. Hersh**, Wayne, Pa.; **Christopher Wetmore**, Jackson; **Dennis Westphal**, Parma, both of Mich.

[73] Assignee: **CertainTeed Corporation**, Valley Forge, Pa.

[**] Term: **14 Years**

[21] Appl. No.: **69,227**

[22] Filed: **Mar. 14, 1997**

[51] **LOC (6) Cl.** **25-01**

[52] **U.S. Cl.** **D25/124**

[58] **Field of Search** D25/52, 124, 125; 52/204.1, 204.5; 49/204.1, 204.5

[56] **References Cited**

U.S. PATENT DOCUMENTS

D. 366,326 1/1996 Schrader et al. D25/124

Primary Examiner—Doris Clark
Attorney, Agent, or Firm—Duane, Morris & Heckscl

[57] **CLAIM**

The ornamental design for a window component extrusion, as shown and described.

DESCRIPTION

The FIGURE is a front perspective view of a window component extrusion showing our new design, the rear perspective view being a mirror image thereof.
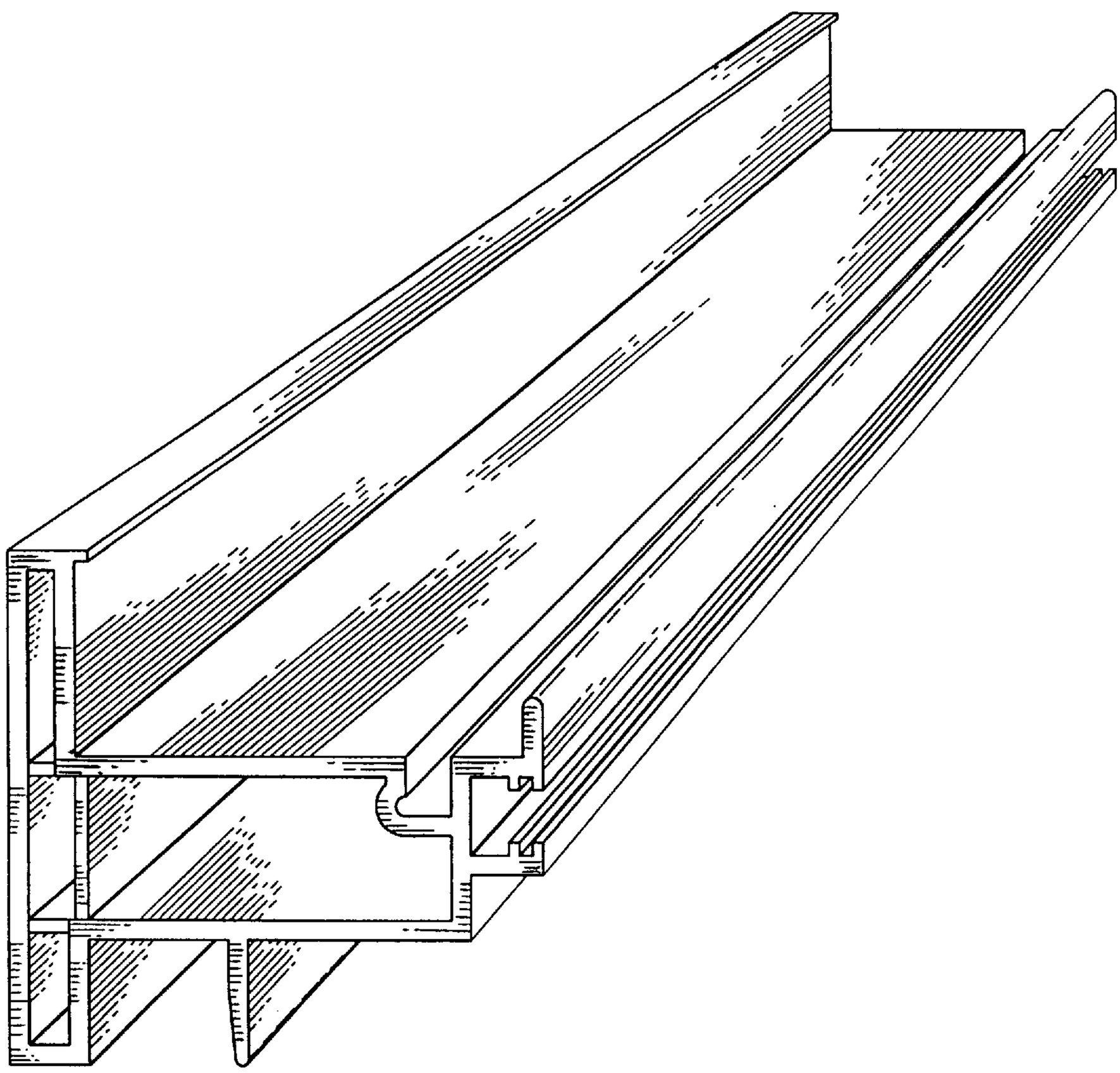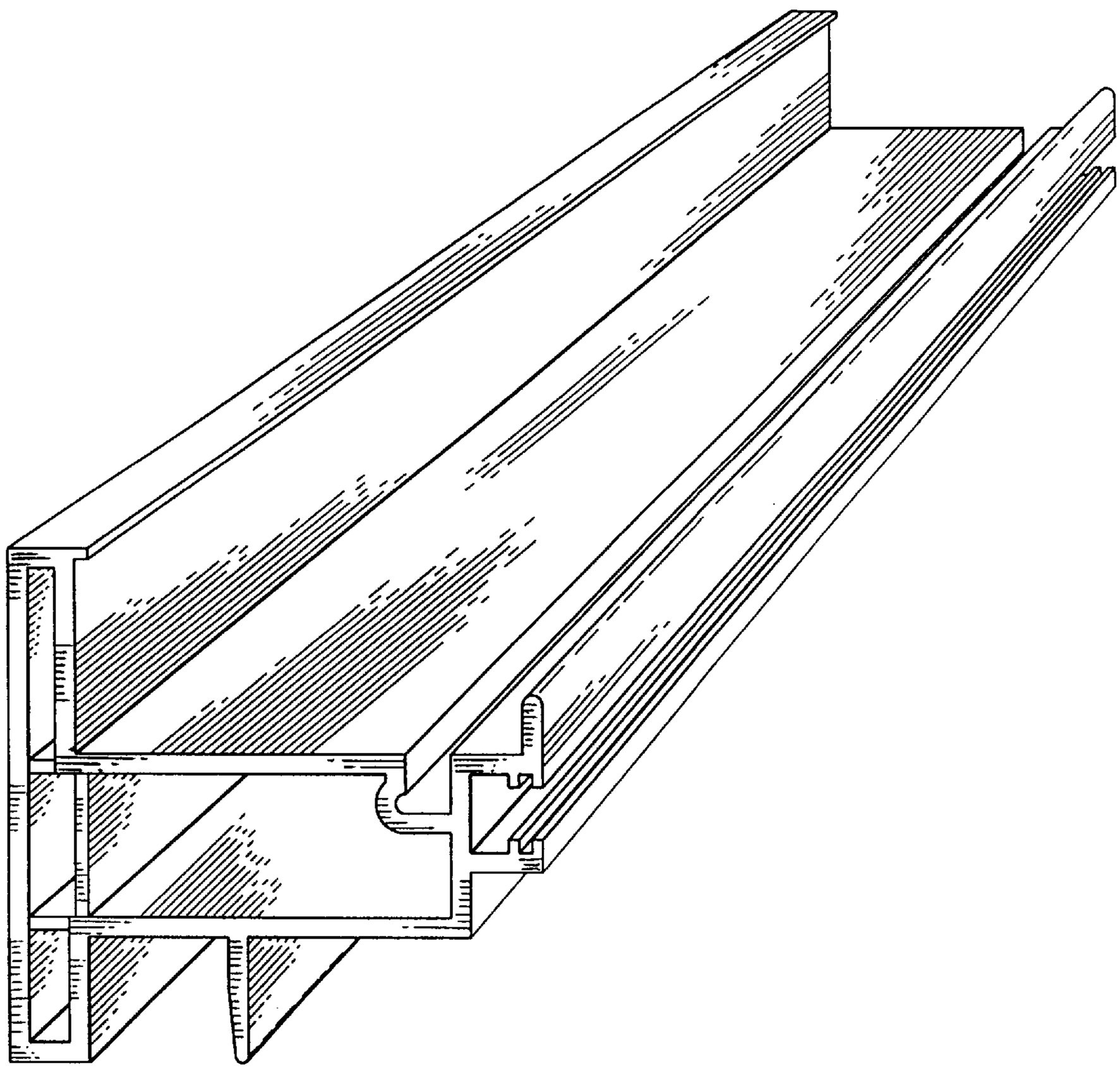
1 Claim, 1 Drawing Sheet