US00D399401S

United States Patent [19]

Price et al.

[11] Patent Number: Des. 399,401

[45] Date of Patent: **Oct. 13, 1998

[54] **MAIN BODY OF A CLAMP FOR A POWER TOOL**

[75] Inventors: **Scott D. Price**, Singapore, Singapore; **William R. Stumpf**, Kingsville, Md.

[73] Assignee: **Black & Decker Inc.**, Newark, Del.

[**] Term: **14 Years**

[21] Appl. No.: **83,112**

[22] Filed: **Dec. 19, 1997**

Related U.S. Application Data

[63] Continuation of Ser. No. 65,567, Jan. 29, 1997.

[51] **LOC (6) Cl.** **08-05**

[52] **U.S. Cl.** **D8/72**

[58] **Field of Search** D8/72; 24/514, 24/525, 569; 83/466, 464, 452, 468.2, 468.7, 471.3, 467.1, 745, 859; 144/282; 269/76, 88, 249; 248/231.7; 403/209, 373

[56] **References Cited**

U.S. PATENT DOCUMENTS

D. 236,941 9/1975 Seaverns D8/72

5,427,364 6/1995 Zborschil ..... 269/249 X

5,730,434 3/1998 Schoene et al. 269/88

Primary Examiner—Antoine Duval Davis

Attorney, Agent, or Firm—Adan Ayala

[57] **CLAIM**

The ornamental design for a main body of a clamp for a power tool, as shown and described.

DESCRIPTION

FIG. **1** is a left side elevational view of a first embodiment of a main body of a clamp for a power tool showing our new design;

FIG. **2** is a right side elevational view of the first embodiment;

FIG. **3** is a front elevational view of the first embodiment;

FIG. **4** is a rear elevational view of the first embodiment;

FIG. **5** is a top plan view of the first embodiment; and,

FIG. **6** is a left side perspective view of the first embodiment.

In the attached drawings, any broken line illustration is not part of the design sought to be patented.

1 Claim, 3 Drawing Sheets

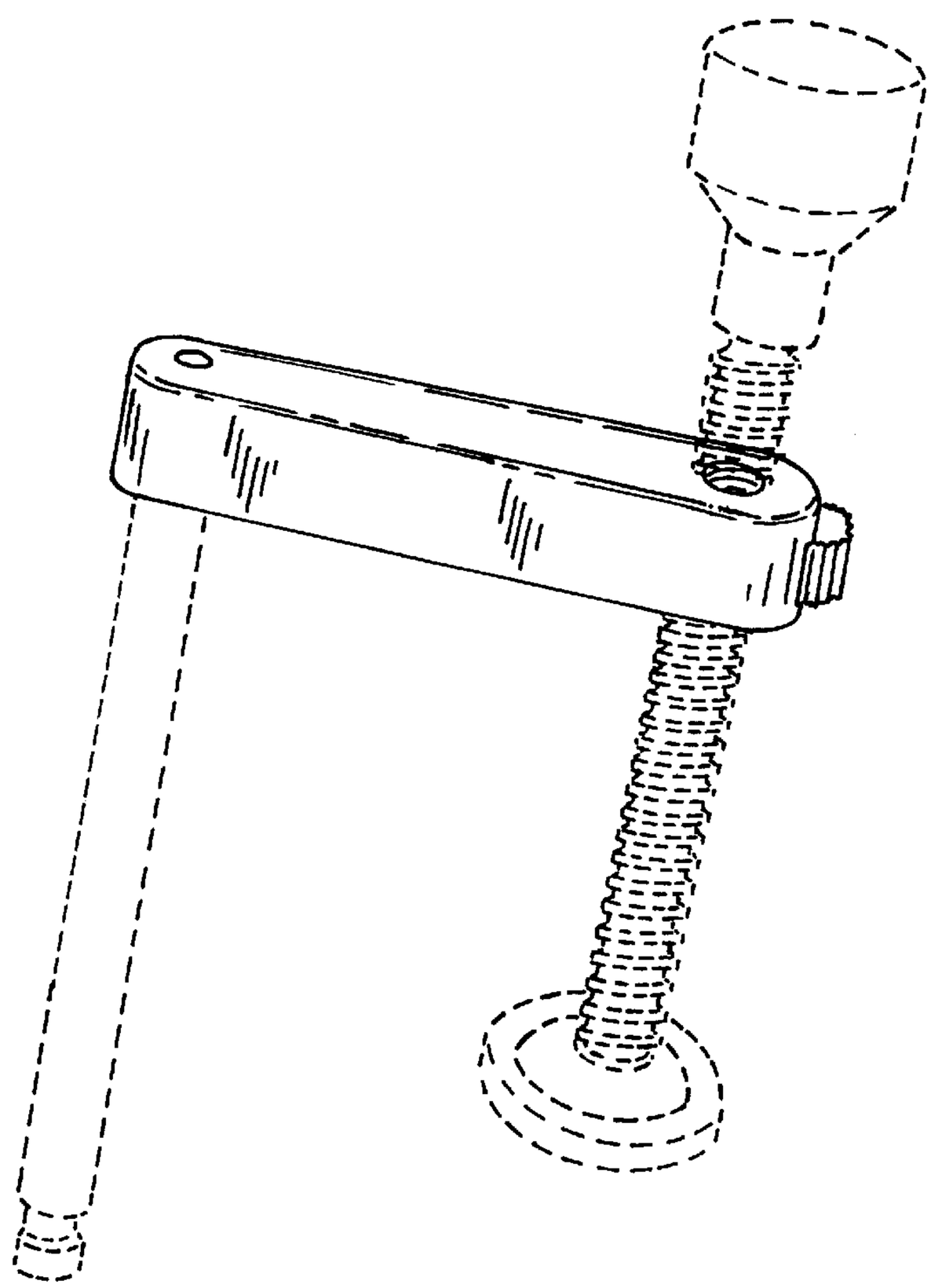

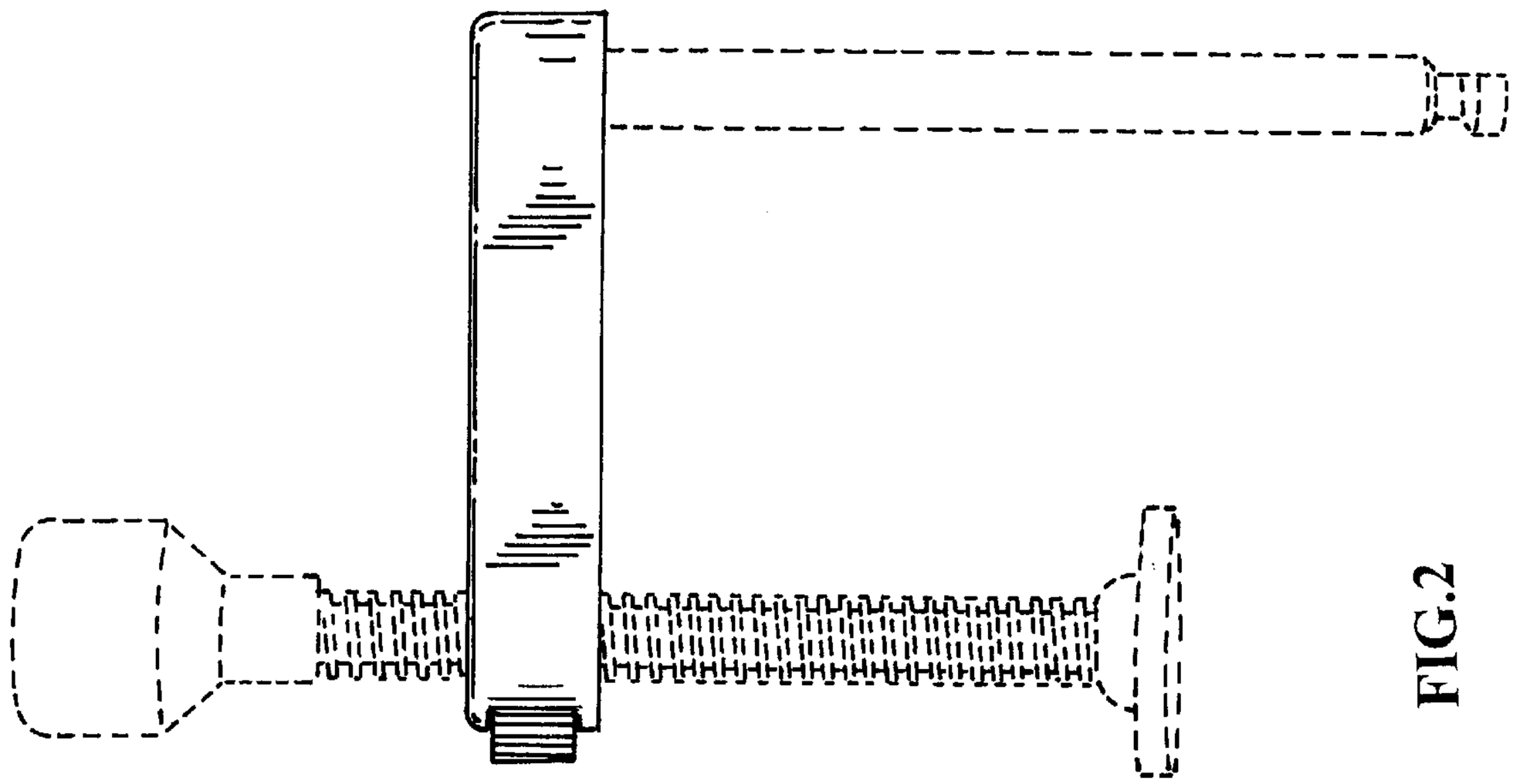

FIG.2

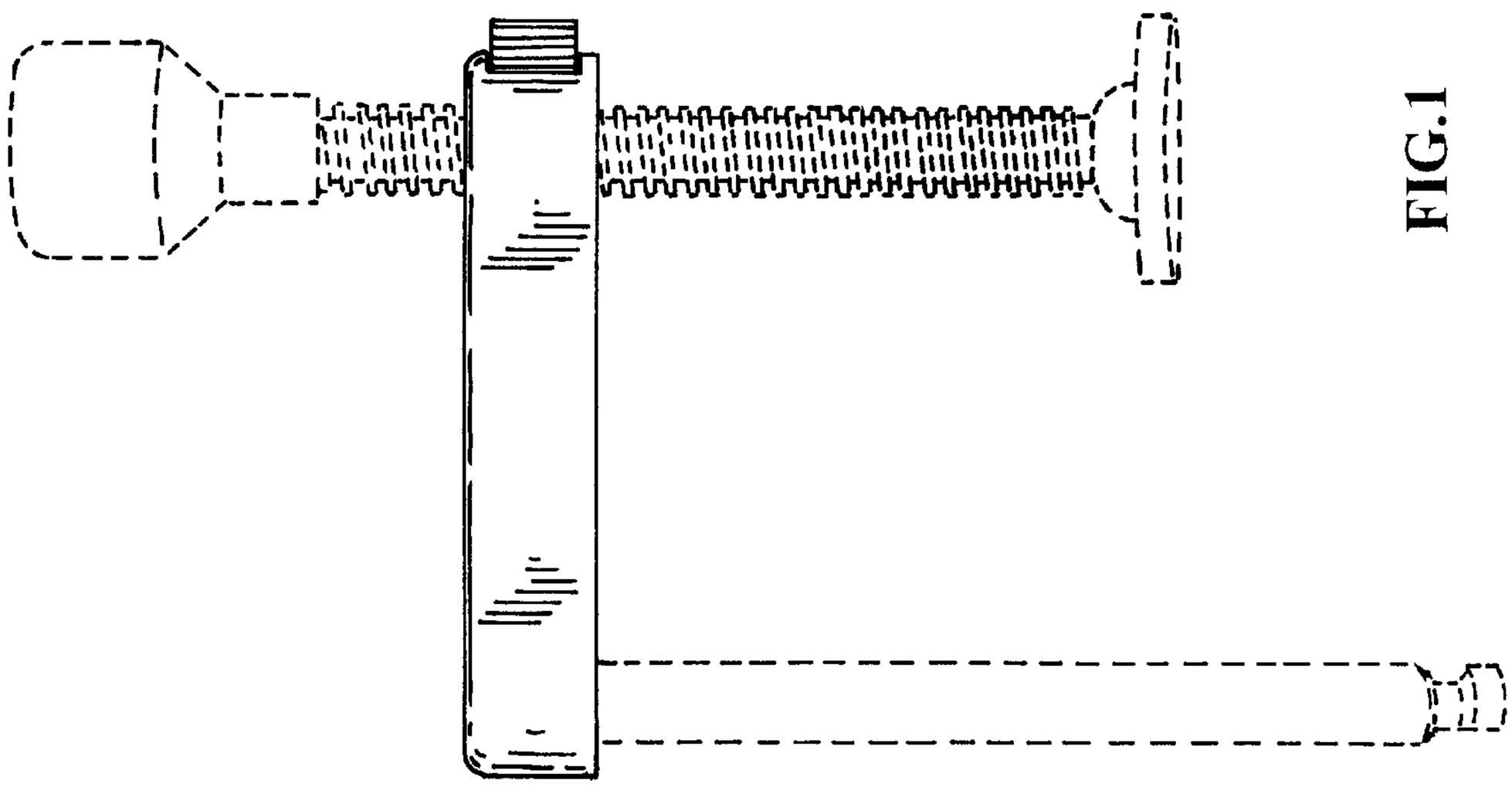

FIG.1

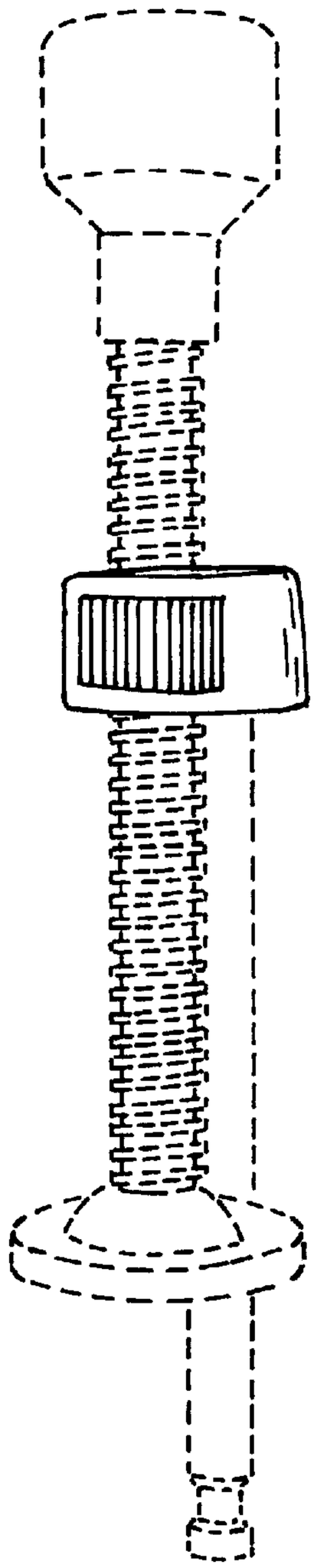

FIG.3

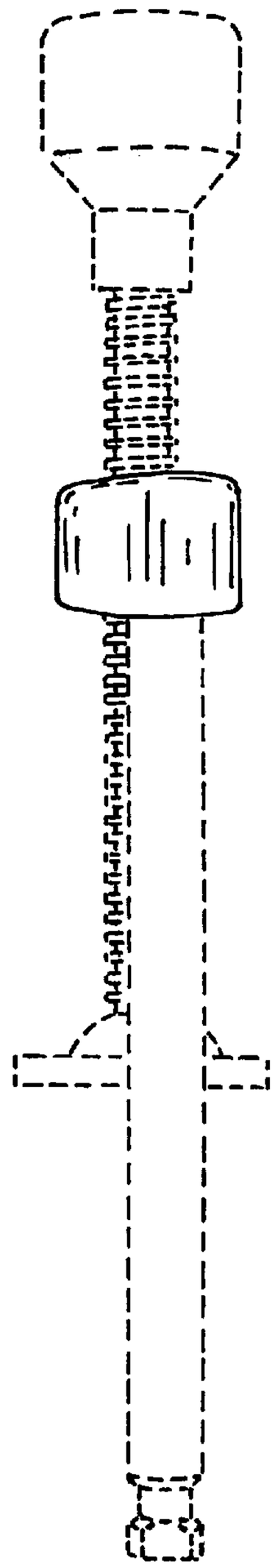

FIG.4

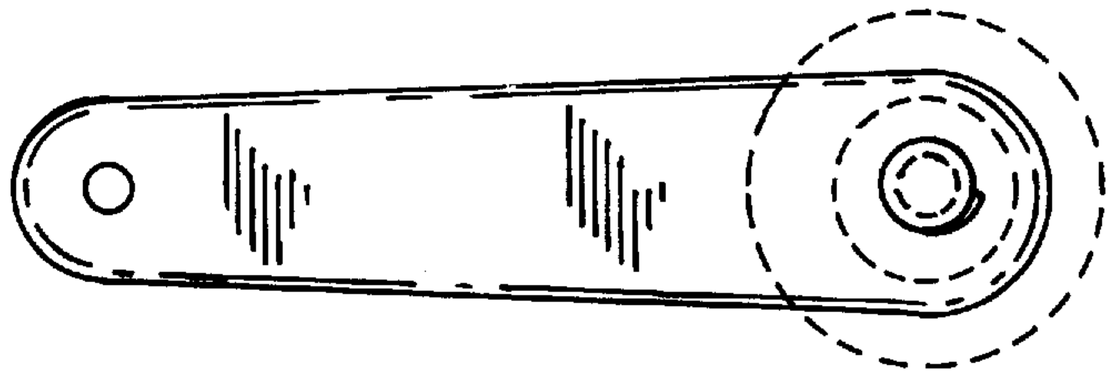

FIG.5

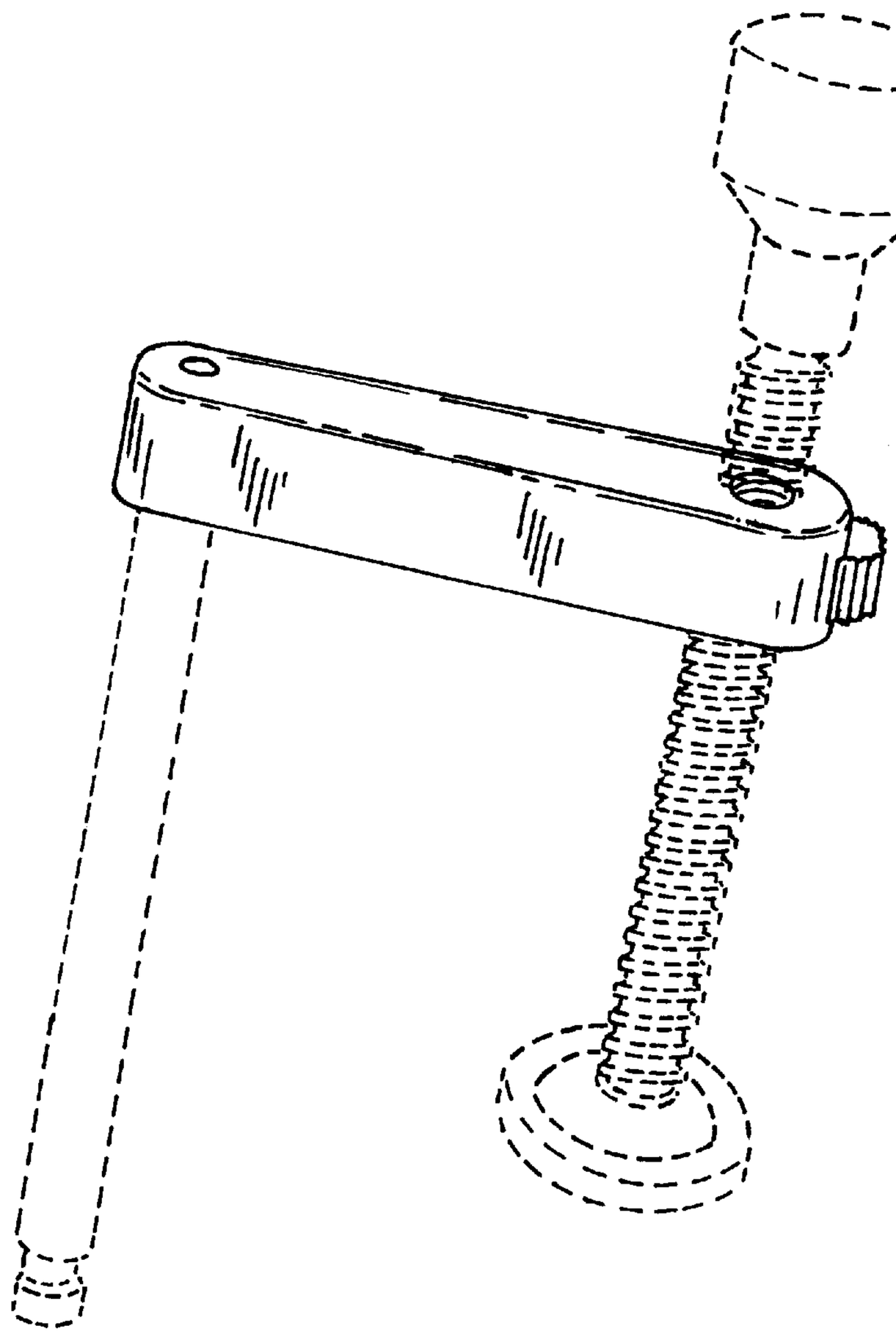

FIG.6