US00D392775S

United States Patent [19]

McMahon

[11] Patent Number: Des. 392,775

[45] Date of Patent: **Mar. 24, 1998

[54] **BED FOR PETS**

[75] Inventor: **Franklin D. McMahon**, New York, N.Y.

[73] Assignee: **Univier Corp**, New York, N.Y.

[**] Term: **14 Years**

[21] Appl. No.: **64,210**

[22] Filed: **Dec. 24, 1996**

[51] **LOC (6) Cl.** **30-06**

[52] **U.S. Cl.** **D30/118**; D6/334

[58] **Field of Search** D30/118, 108, D30/109, 161; D6/334, 331, 381, 382, 601, 596; 119/28.5, 165, 169, 526, 482

[56] **References Cited**

U.S. PATENT DOCUMENTS

D. 189,072	10/1960	Baisch	D6/334
D. 214,302	6/1969	Barber	D6/601
D. 245,950	10/1977	Mathur	D6/334
D. 263,770	4/1982	Melchoir	D6/334
D. 295,904	5/1988	McMahon	D30/118
D. 309,199	7/1990	McMahon	D30/118
D. 309,200	7/1990	McMahon	D30/118
D. 314,252	1/1991	Harne	D30/118
D. 335,035	4/1993	Floyd	D30/118
D. 351,687	10/1994	McMahon	D30/118
D. 355,999	3/1995	Townsend	D6/601
3,438,676	4/1969	Brosk	D6/334
5,551,373	9/1996	O'Donnell	119/28.5

OTHER PUBLICATIONS

Valco Pet brochure; Style #61430 Pet Couch; picture on front cover, Aug. 1995.

Primary Examiner—Cathy Anne MacCormac
Attorney, Agent, or Firm—Fitzpatrick, Cella, Harper & Scinto

[57] **CLAIM**

The ornamental design for a bed for pets, as shown and described.

DESCRIPTION

FIG. **1** is a perspective view of a bed for pets according to my design;
FIG. **2** is a front elevational view thereof;
FIG. **3** is a rear elevational view thereof;
FIG. **4** is a left side elevational view thereof, the right side elevational view being a mirror image thereof;
FIG. **5** is a top plan view thereof; and,
FIG. **6** is a bottom plan view thereof.

1 Claim, 2 Drawing Sheets

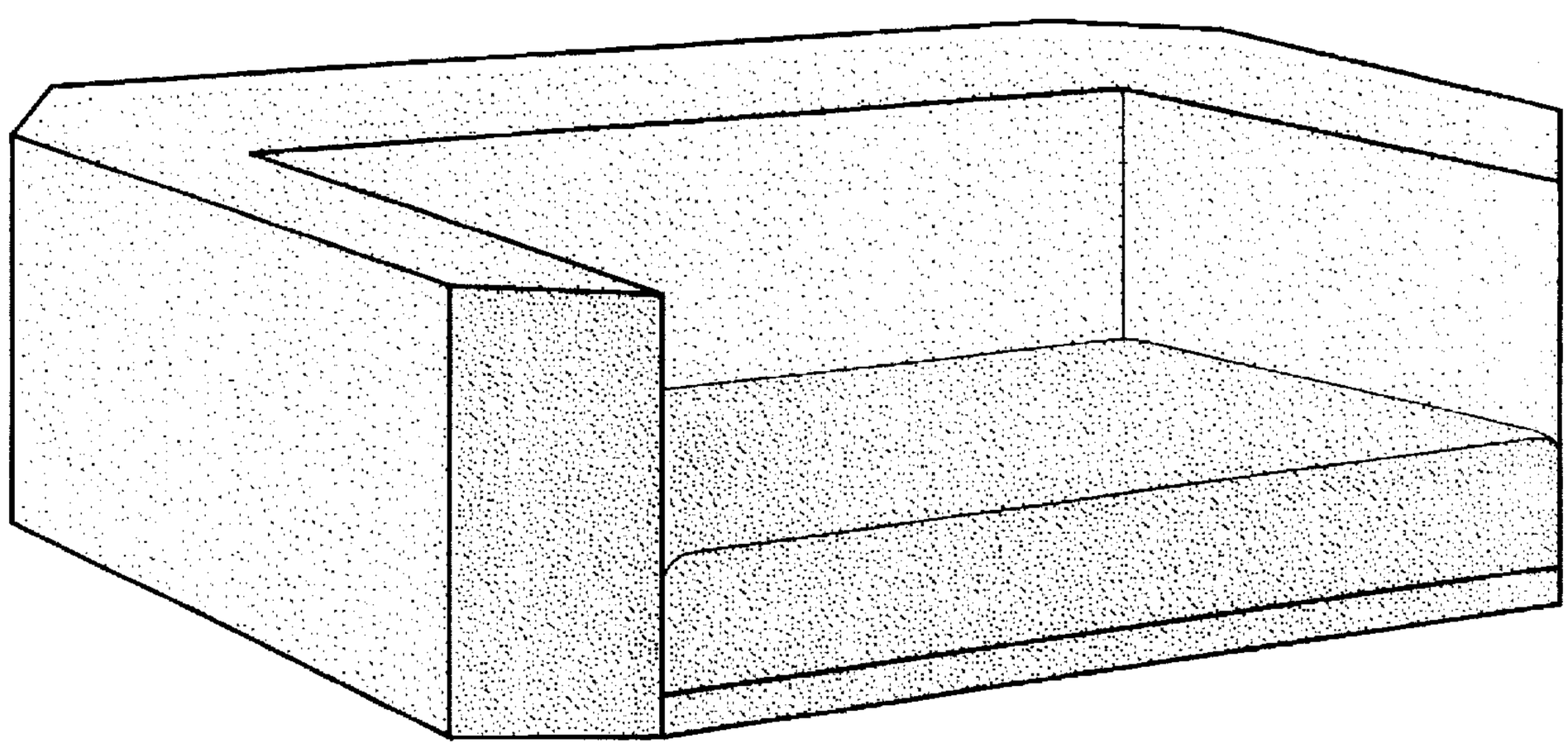

FIG. 1

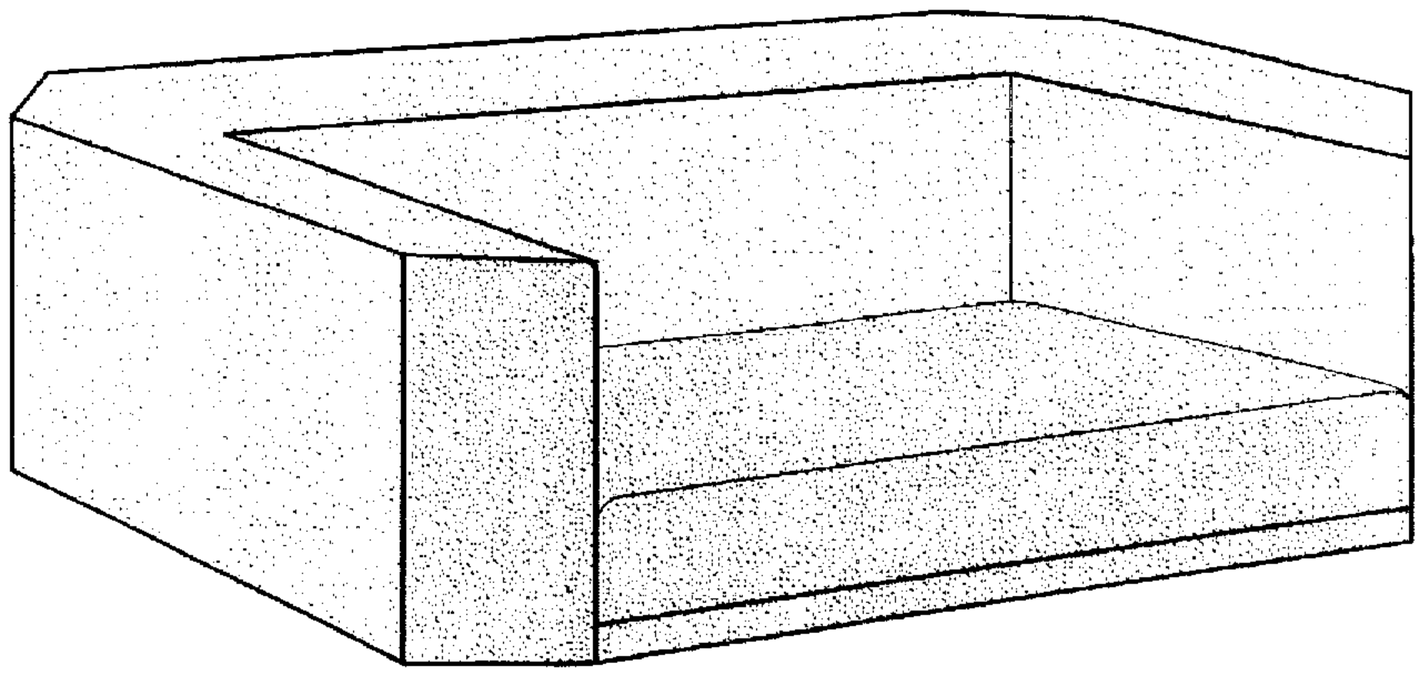

FIG. 2

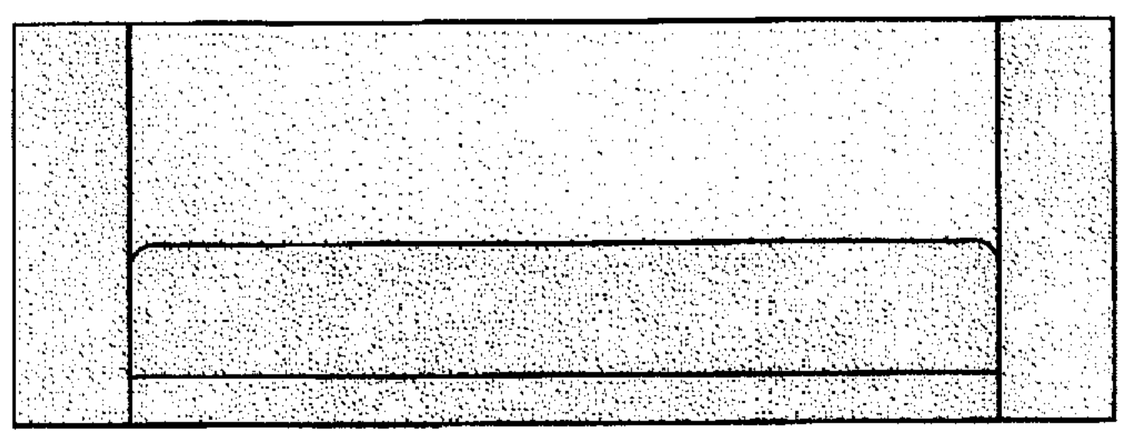

FIG. 3

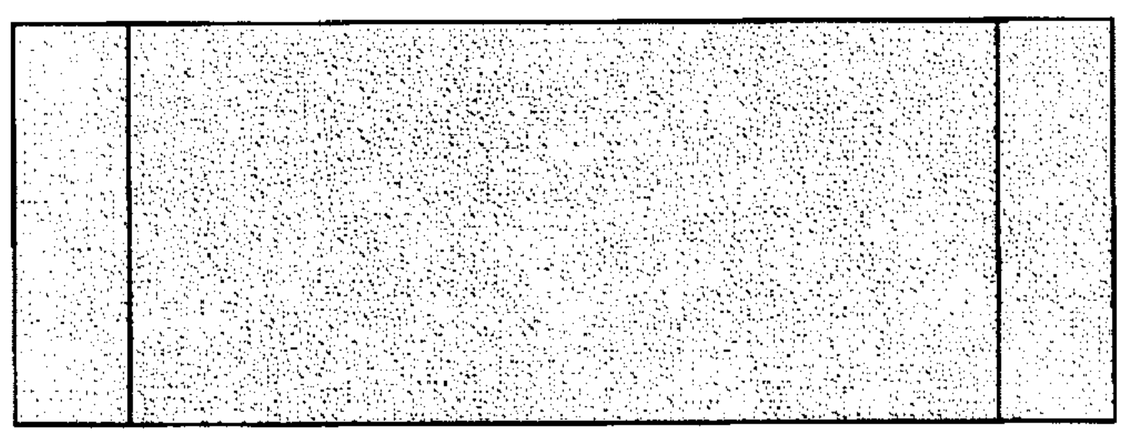

FIG. 4

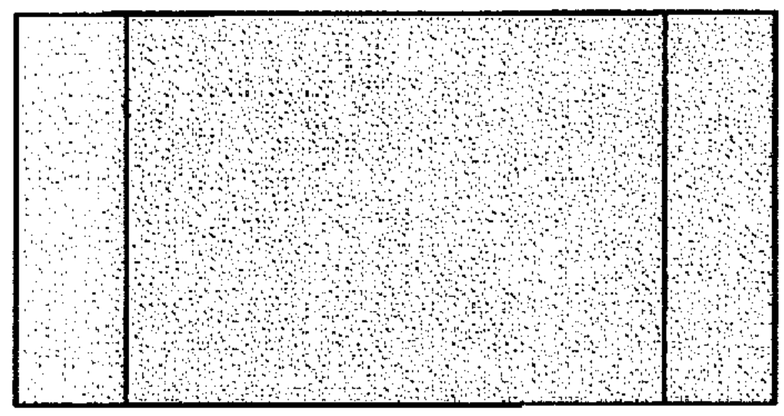

FIG. 5

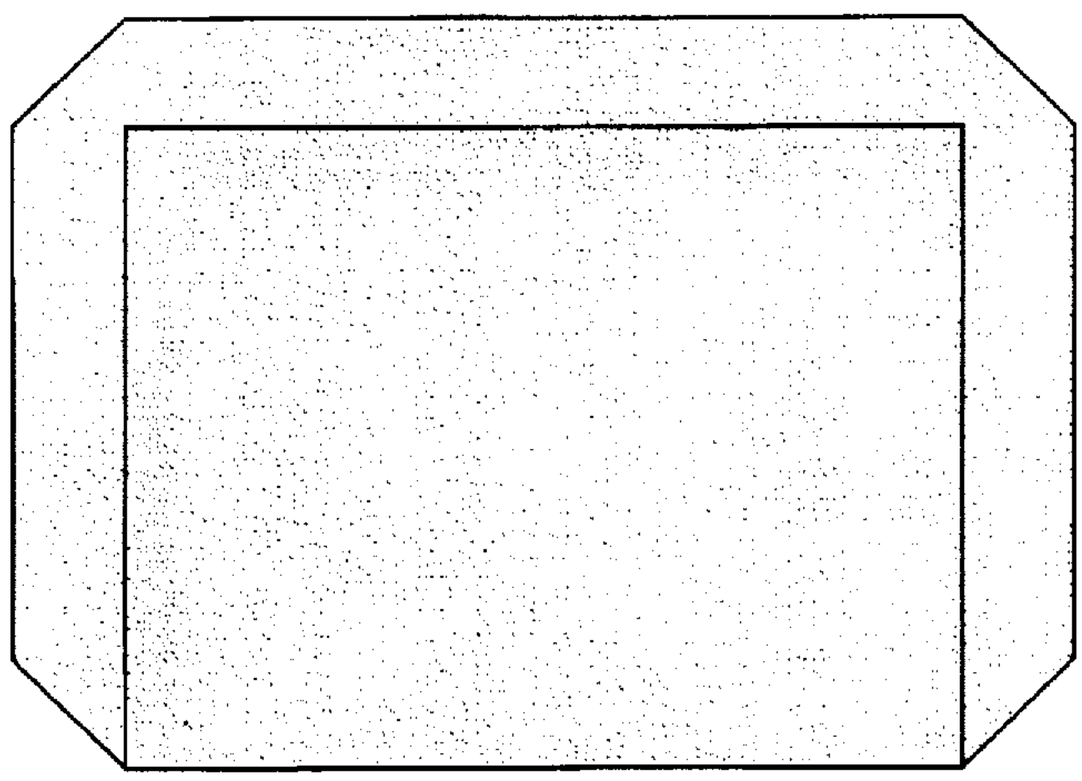
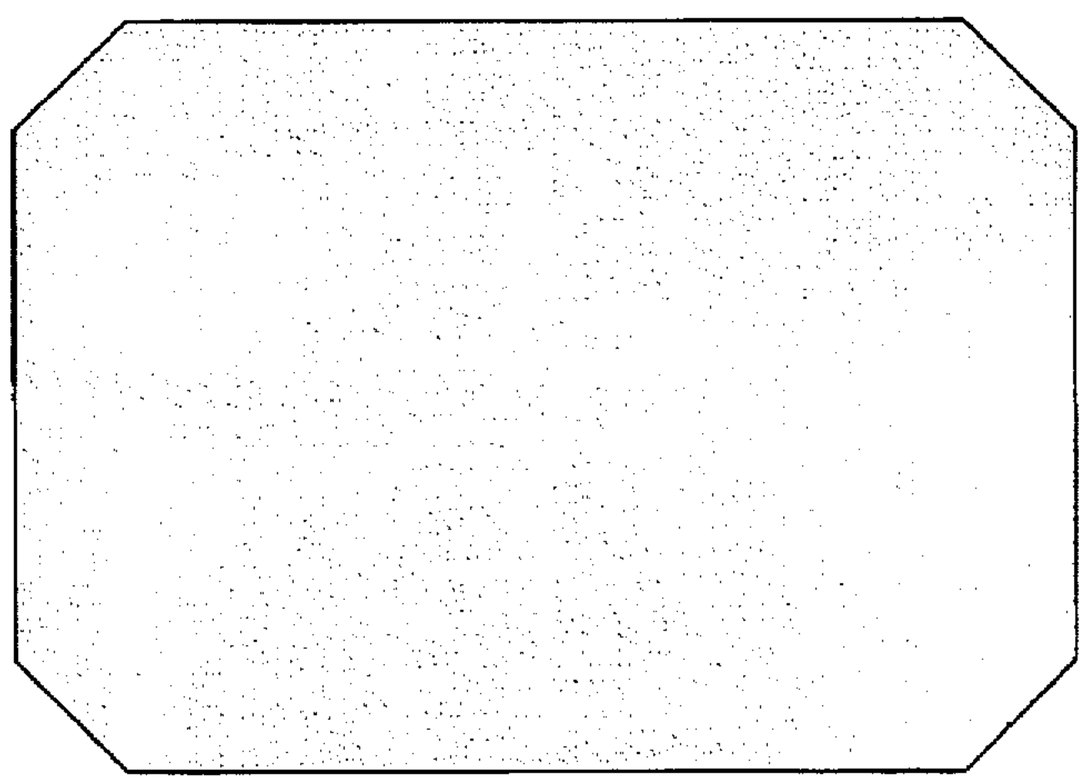
FIG. 6