US00D391632S

United States Patent [19]

Thomas

[11] Patent Number: Des. 391,632

[45] Date of Patent: **Mar. 3, 1998

[54] COMBINED AIR VENT COVER AND SOLAR PANEL

[76] Inventor: Allen C. Thomas, 5513 W. Sligh Ave., Tampa, Fla. 33634

[**] Term: 14 Years

[21] Appl. No.: 53,202

[22] Filed: Apr. 17, 1996

Related U.S. Application Data

[63] Continuation-in-part of Ser. No. 38,369, May 4, 1995, Pat. No. Des. 367,007.

[51] LOC (6) Cl. 23-04

[52] U.S. Cl. D23/393; D23/373

[58] Field of Search D23/371, 373, D23/374, 393, 394; 454/136, 900

[56] **References Cited**

U.S. PATENT DOCUMENTS

D. 329,694 9/1992 Wimberly D23/373

D. 376,007 11/1996 Thomas D23/393

Primary Examiner—Lisa Lichtenstein

Attorney, Agent, or Firm—Frijouf, Rust & Pyle, P.A.

[57] **CLAIM**

The ornamental design for an combined air vent cover and solar panel, as shown and described.

DESCRIPTION

FIG. 1 is a front perspective view of my new design for an combined air vent cover and solar panel;

FIG. 2 is a rear perspective view thereof;

FIG. 3 is a rear view thereof;

FIG. 4 is a front view thereof;

FIG. 5 is a slightly reduced left side view thereof;

FIG. 6 is a slightly reduced right side view therof;

FIG. 7 is a reduced top view thereof;

FIG. 8 is a reduced bottom view thereof; and,

FIG. 9 is a rear perspective view thereof.

1 Claim, 5 Drawing Sheets

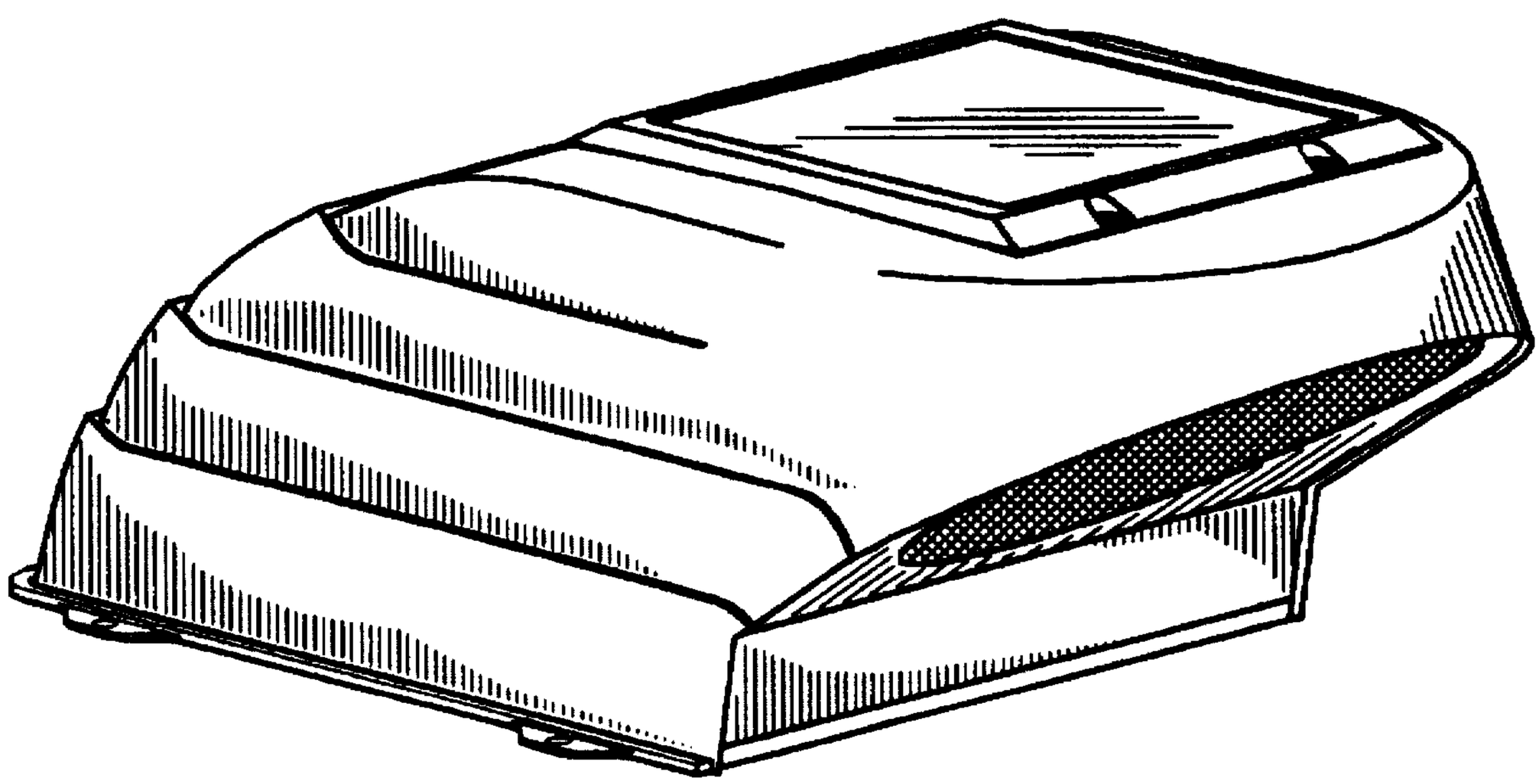

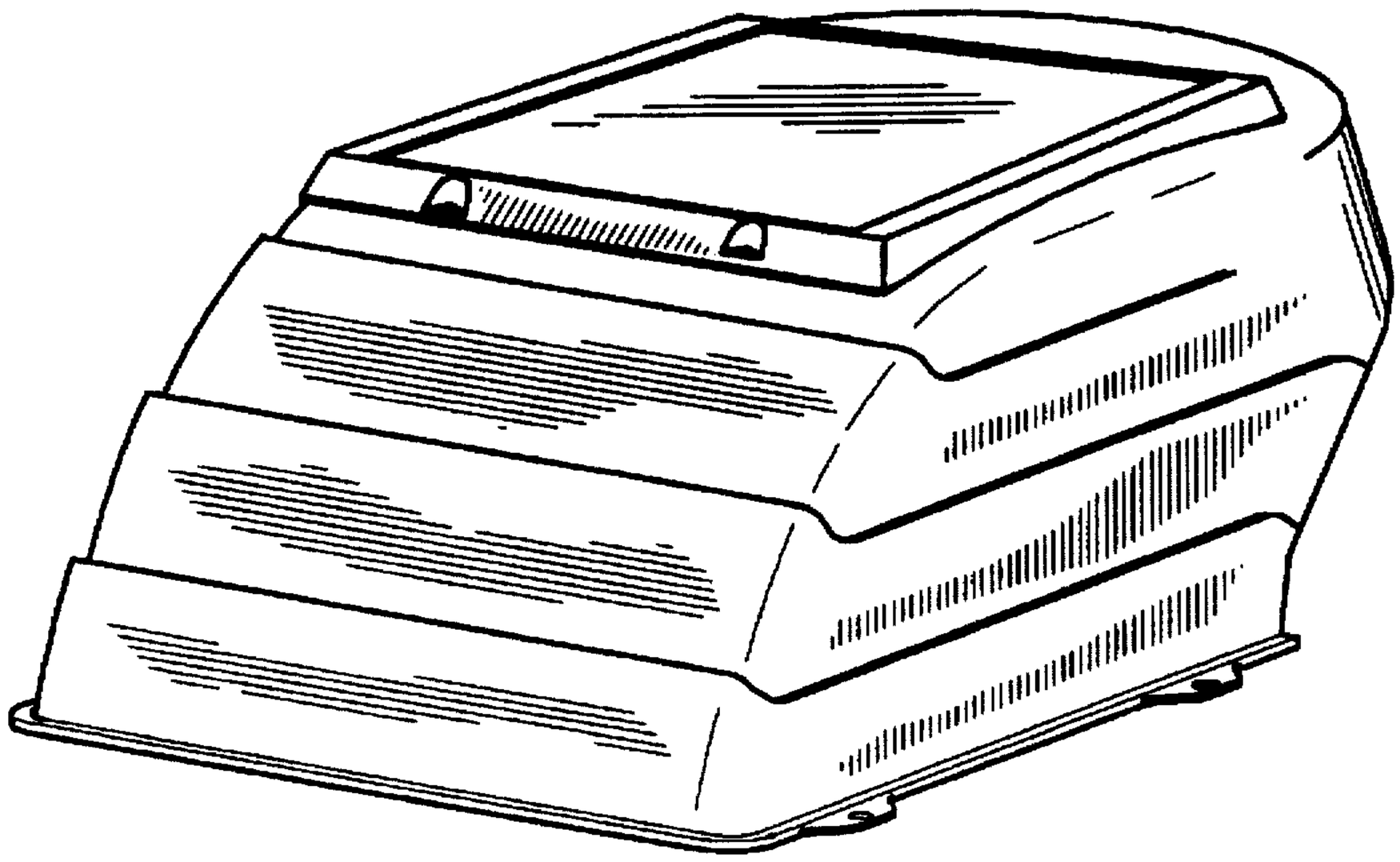

FIG. 1

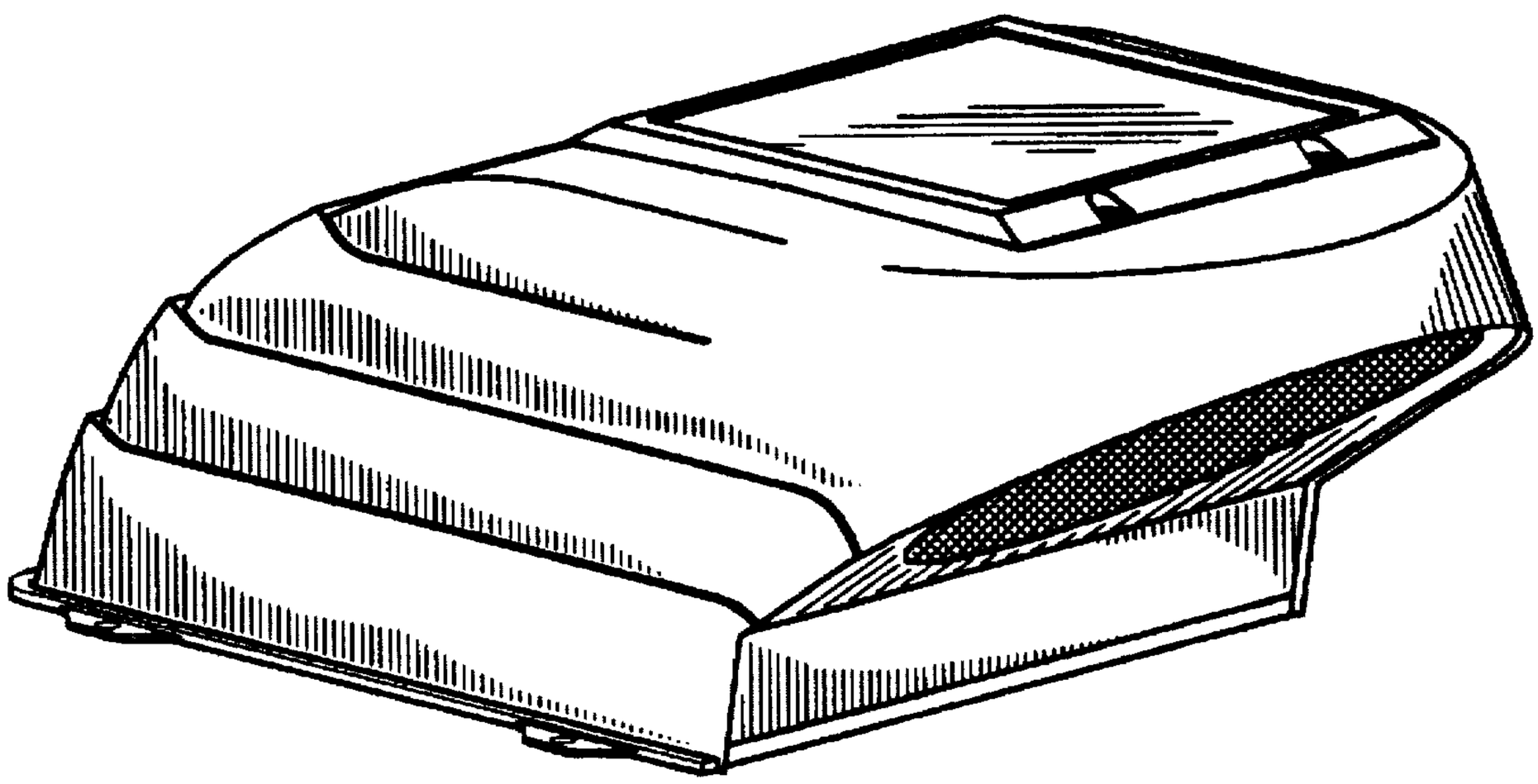

FIG. 2

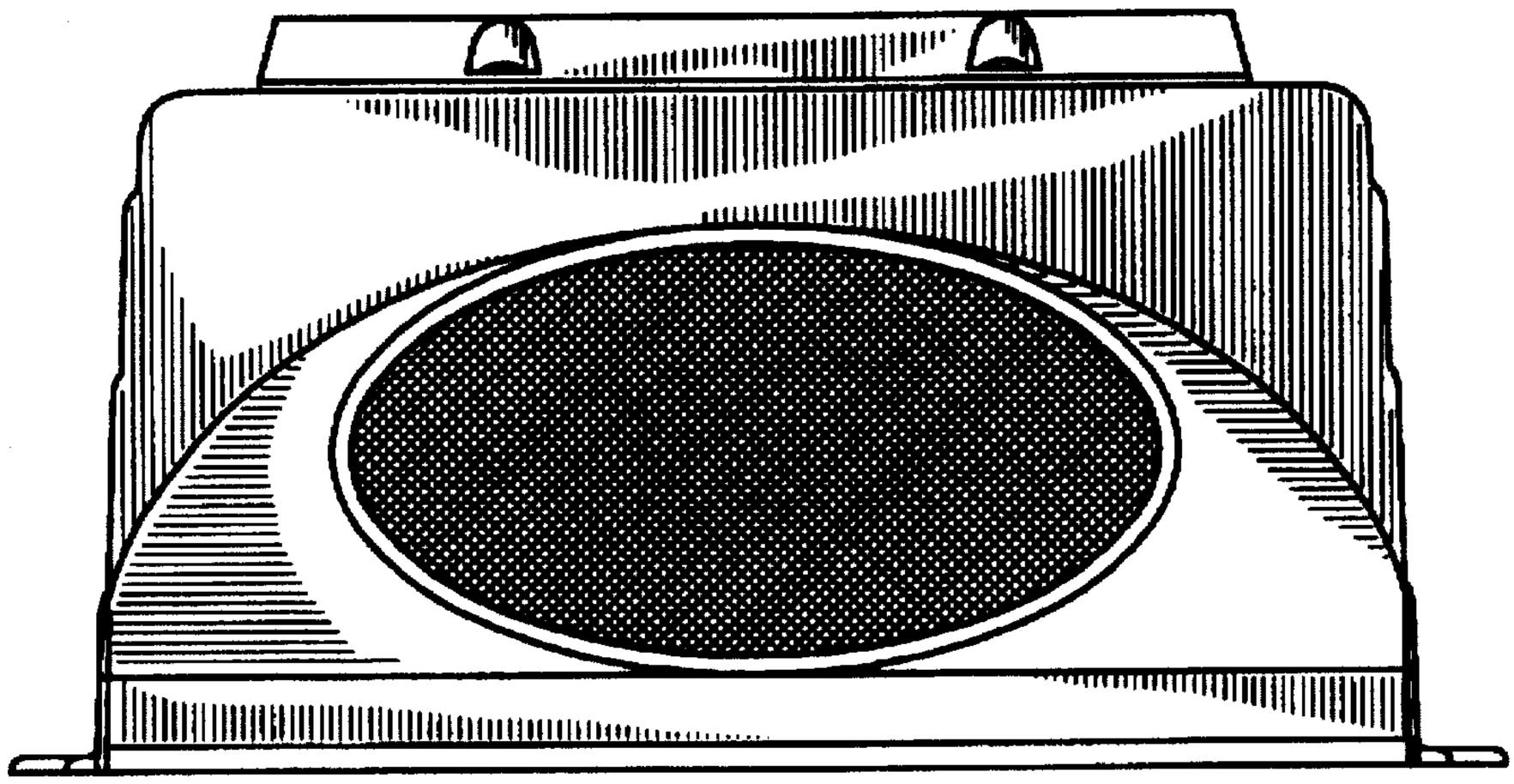

FIG. 3

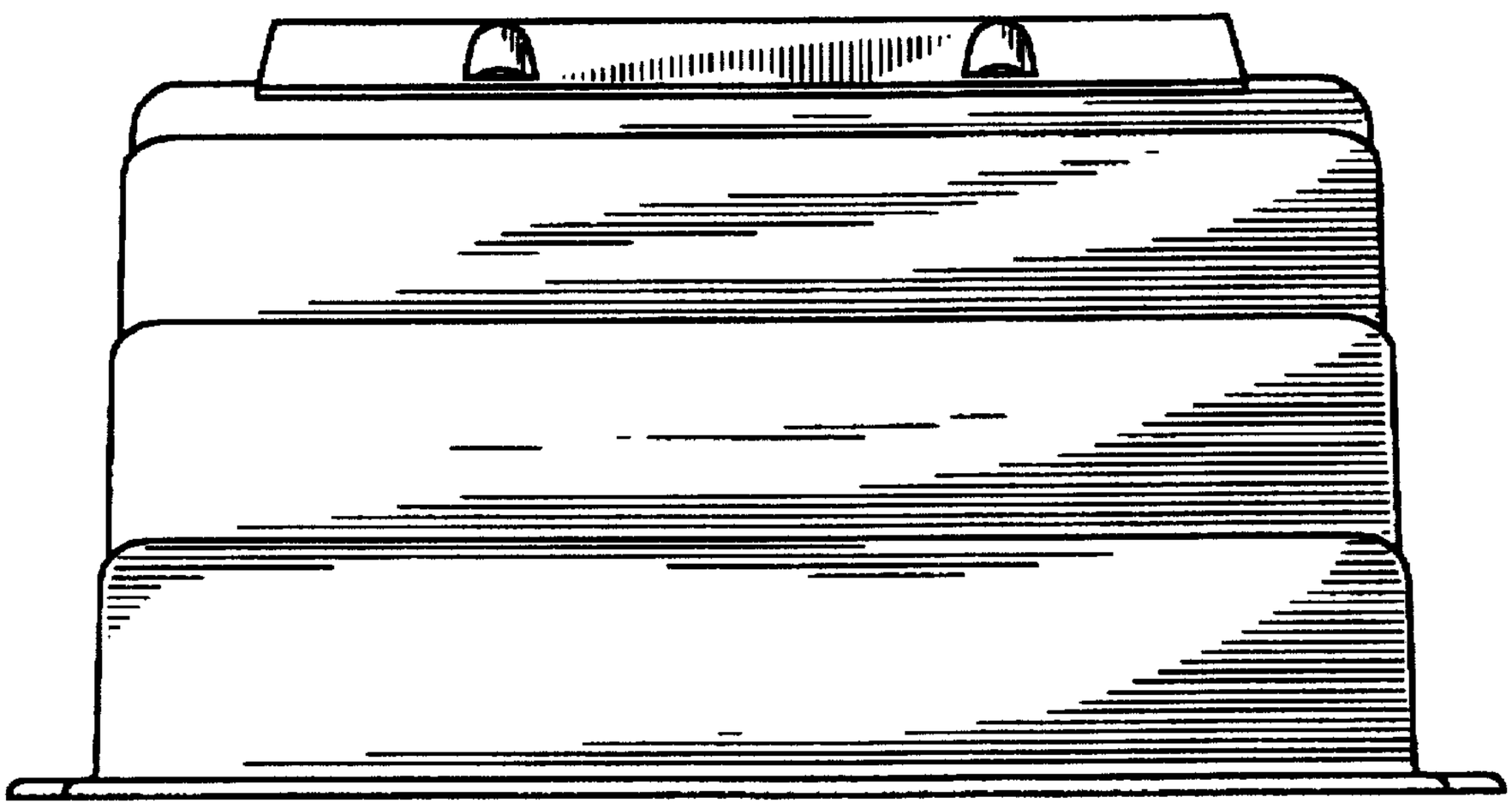

FIG. 4

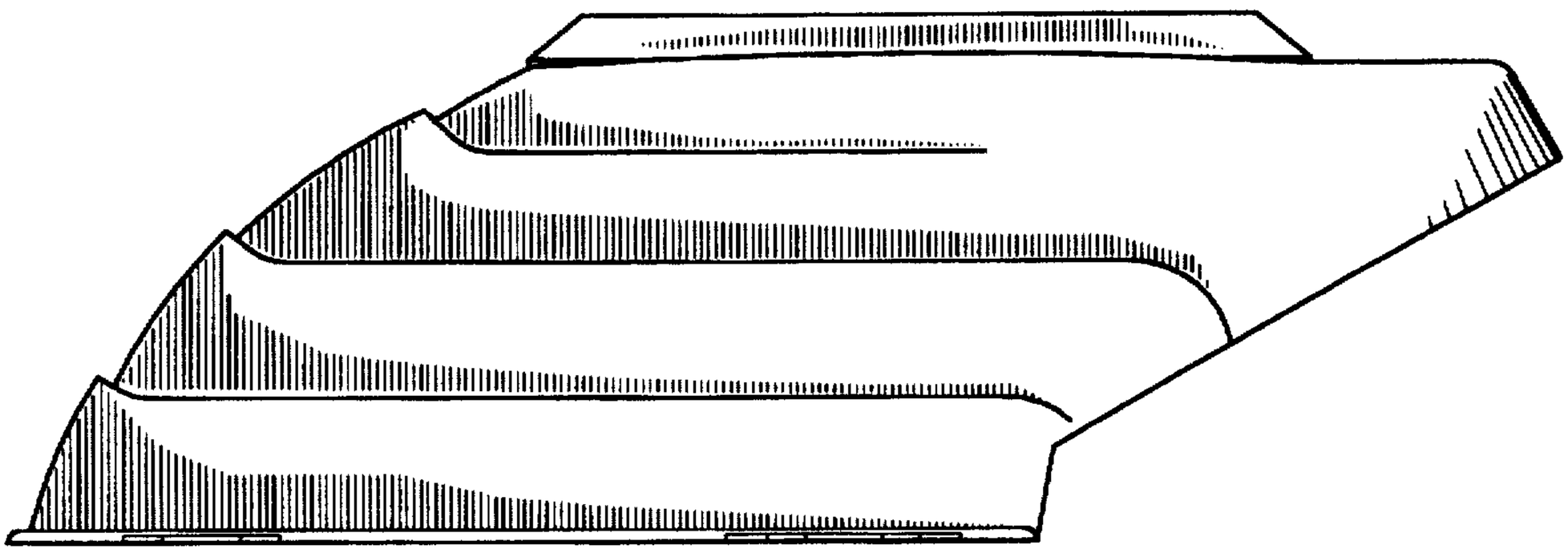

FIG. 5

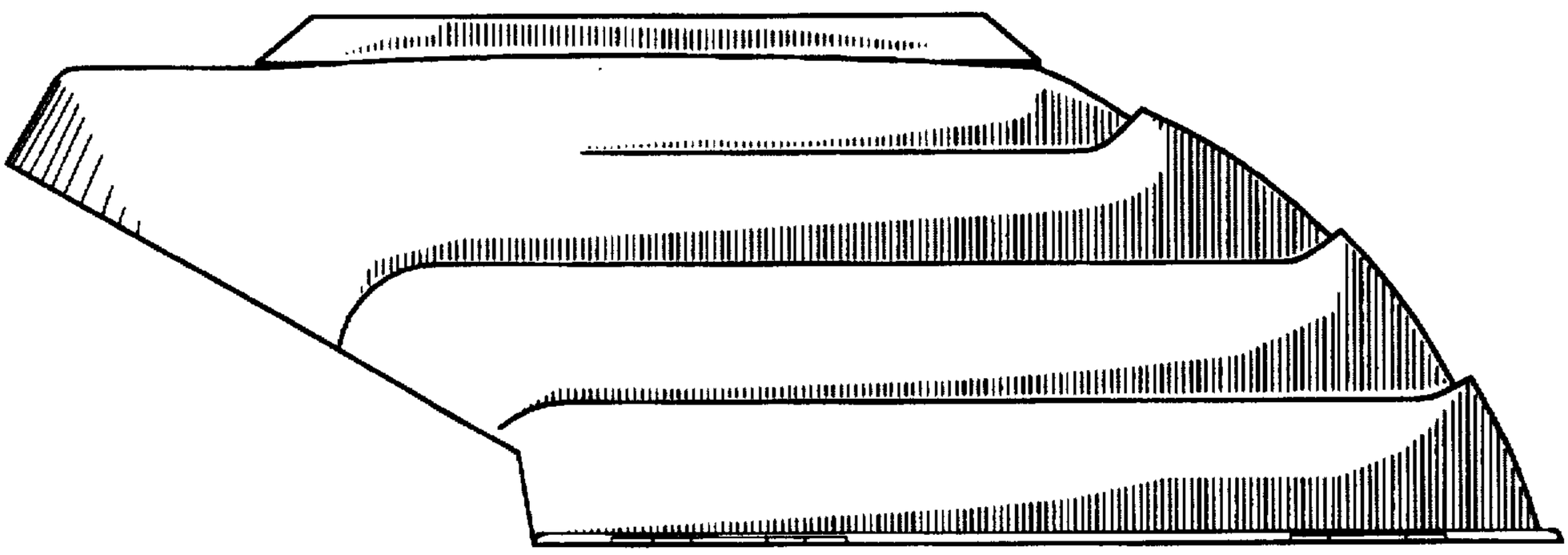

FIG. 6

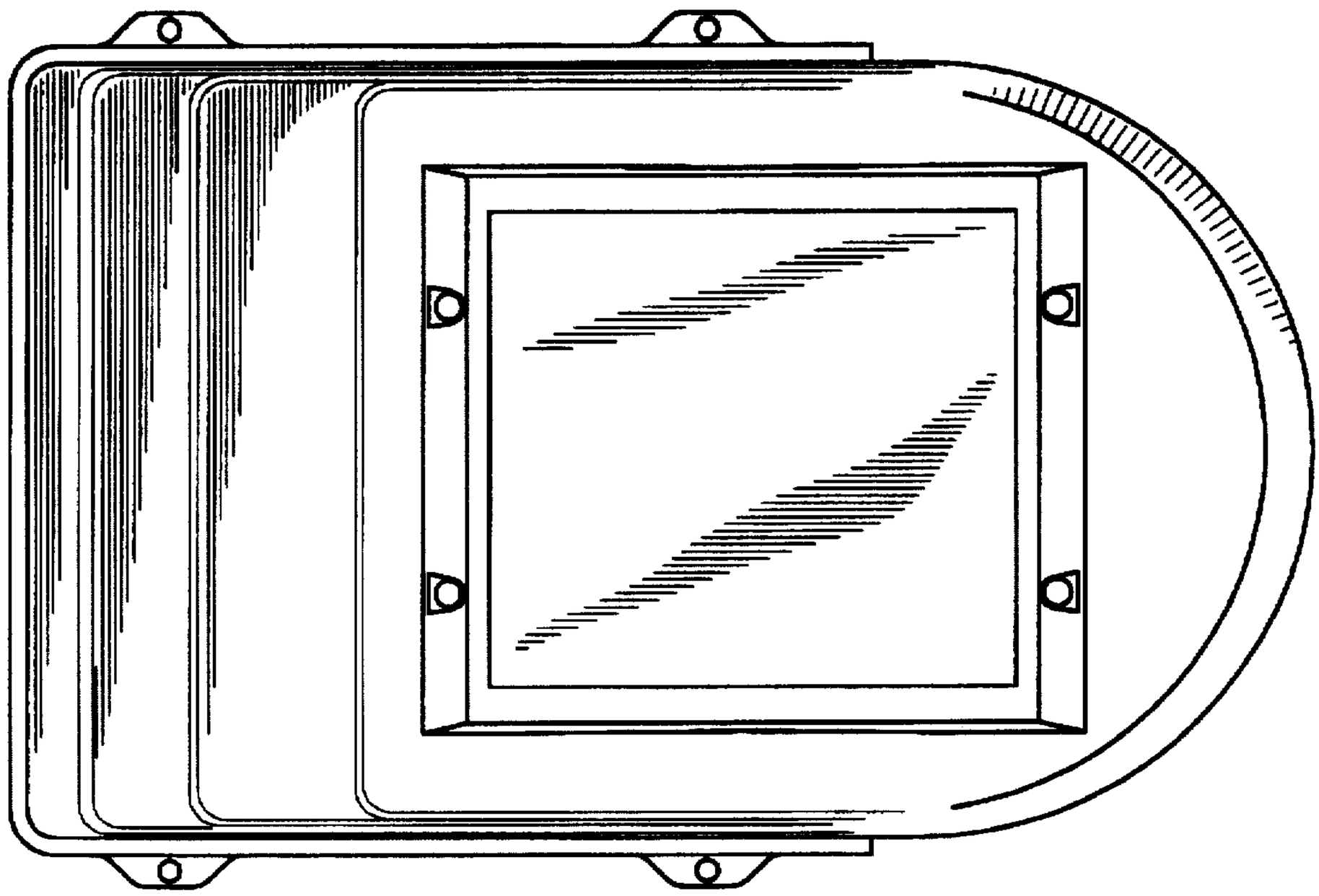

FIG. 7

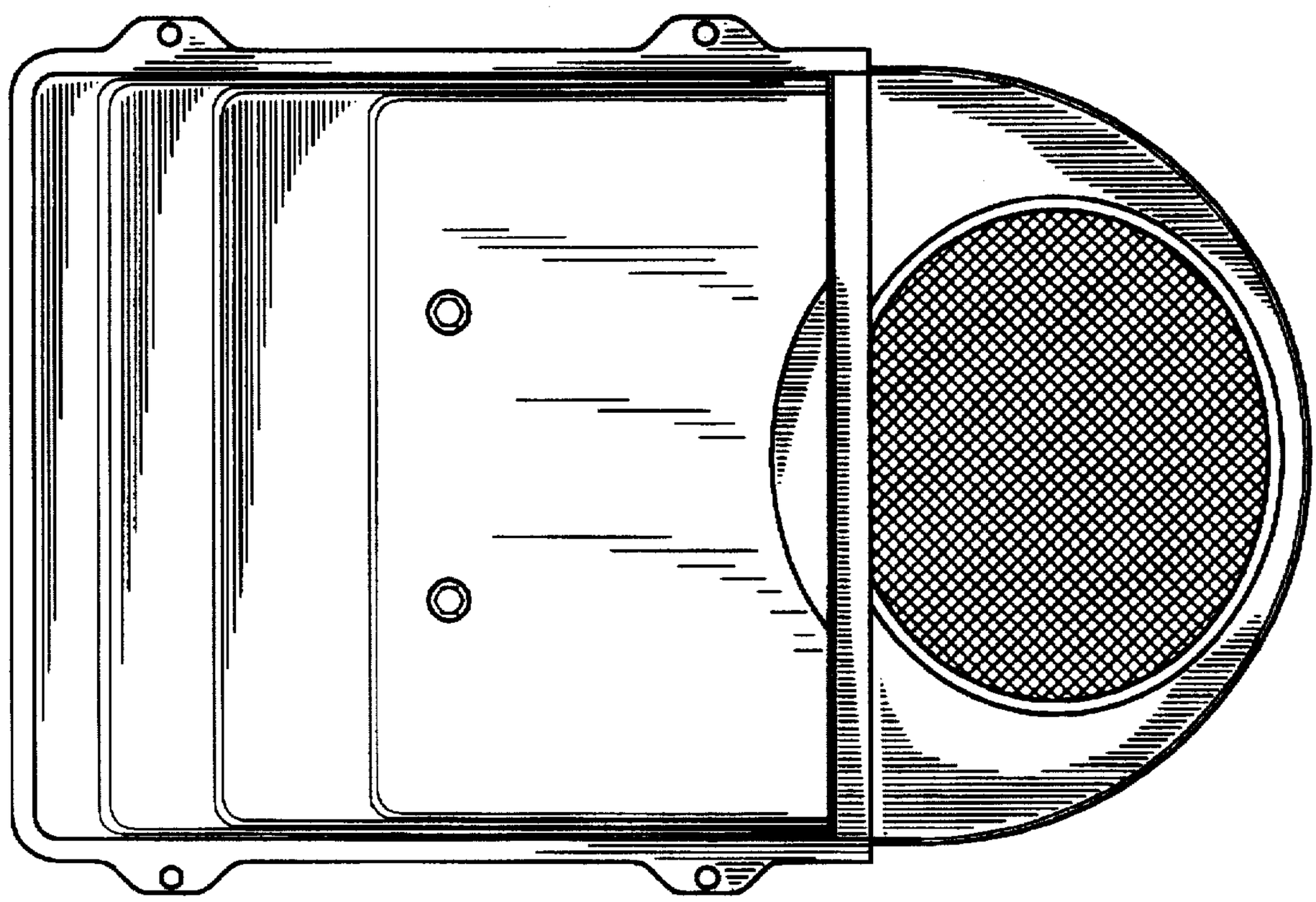

FIG. 8

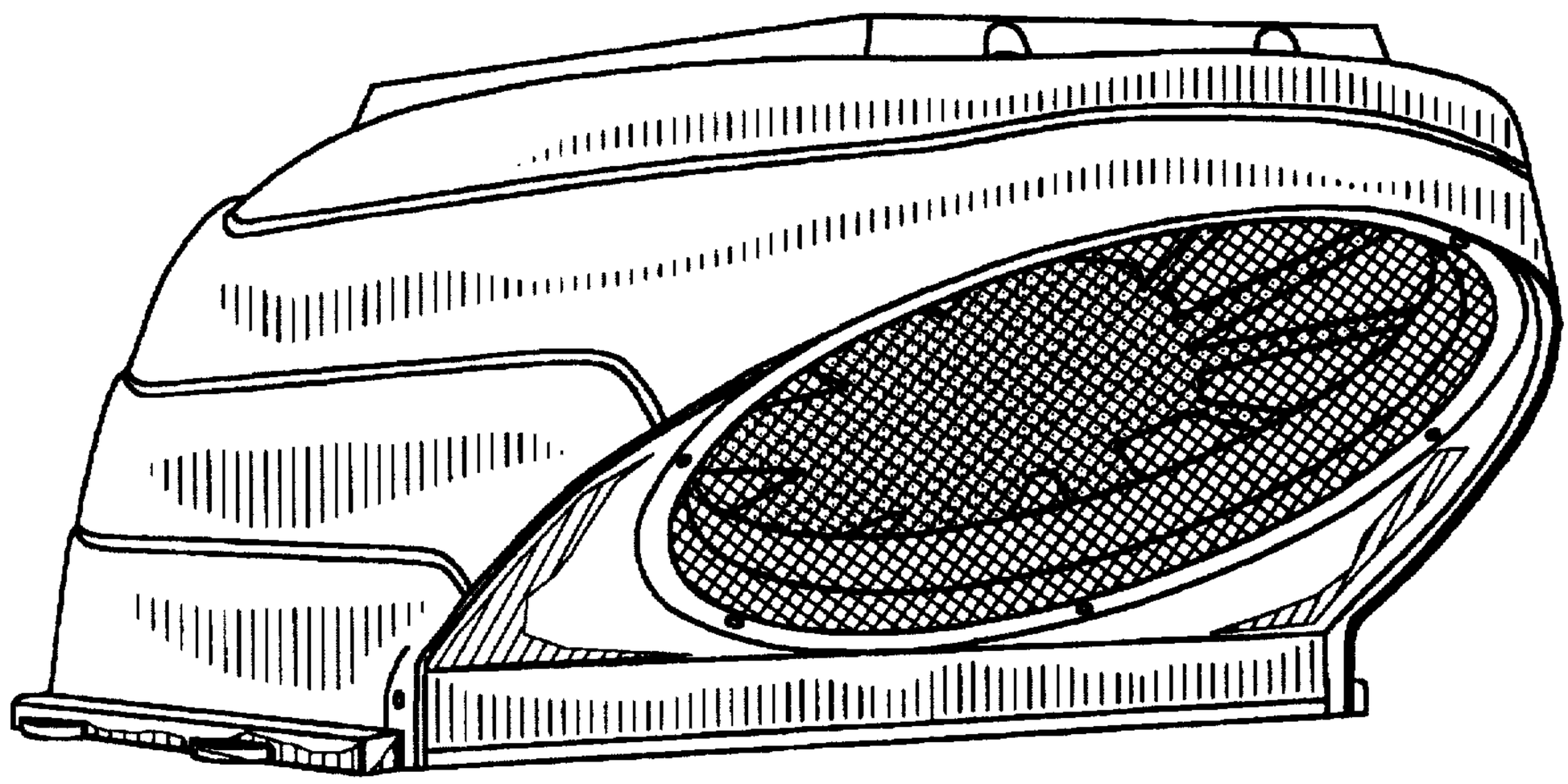

FIG. 9