US00D388127S

United States Patent [19]

Cavallone, Sr.

[11] Patent Number: Des. 388,127

[45] Date of Patent: **Dec. 23, 1997

[54] **SKILL GAME**

[76] Inventor: **Frank J. Cavallone, Sr.**, 8332 Dorado Bay Ct., Las Vegas, Nev. 89128-7169

[**] Term: **14 Years**

[21] Appl. No.: **56,199**

[22] Filed: **Jun. 25, 1996**

[51] **LOC (6) Cl.** **21-01**

[52] **U.S. Cl.** **D21/5**

[58] **Field of Search** D21/1, 2, 4, 5, D21/7, 11; 273/336, 338, 339, 348, 317, 357, 407, 424, 425, 427

[56] **References Cited**

U.S. PATENT DOCUMENTS

D. 301,899	6/1989	Cook	D21/5
D. 329,666	9/1992	Dougherty	D21/5
D. 341,382	11/1993	Deming et al.	D21/5
D. 369,188	4/1996	Briggs	D21/5 X
D. 375,529	11/1996	Kohler	D21/5
1,543,767	6/1925	Heggen	273/336
2,204,078	6/1940	Ferrary	273/336
4,982,966	1/1991	Teafatiller	273/338

Primary Examiner—Prabhakar G. Deshmukh

Attorney, Agent, or Firm—Harpman & Harpman

[57] **CLAIM**

The ornamental design for a skill game, as shown and described.

DESCRIPTION

FIG. **1** is a front, top and side perspective view of the skill game embodying the design of the present invention;

FIG. **2** is a front elevational view thereof;

FIG. **3** is a rear elevational view thereof;

FIG. **4** is a side elevational view thereof, the opposite side elevational view being identical thereto;

FIG. **5** is a top plan view thereof; and,

FIG. **6** is a bottom plan view thereof.

1 Claim, 5 Drawing Sheets

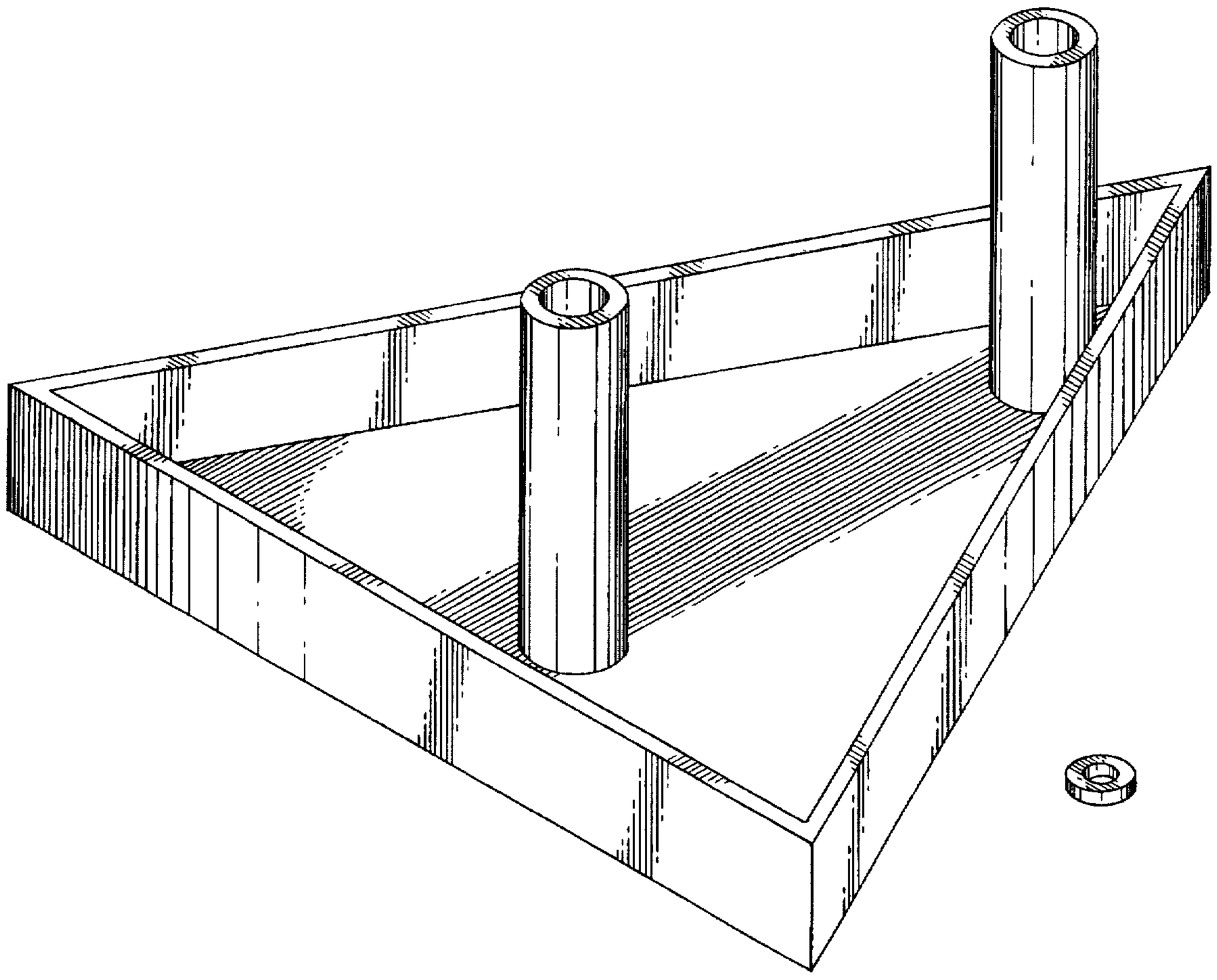

FIG. 1

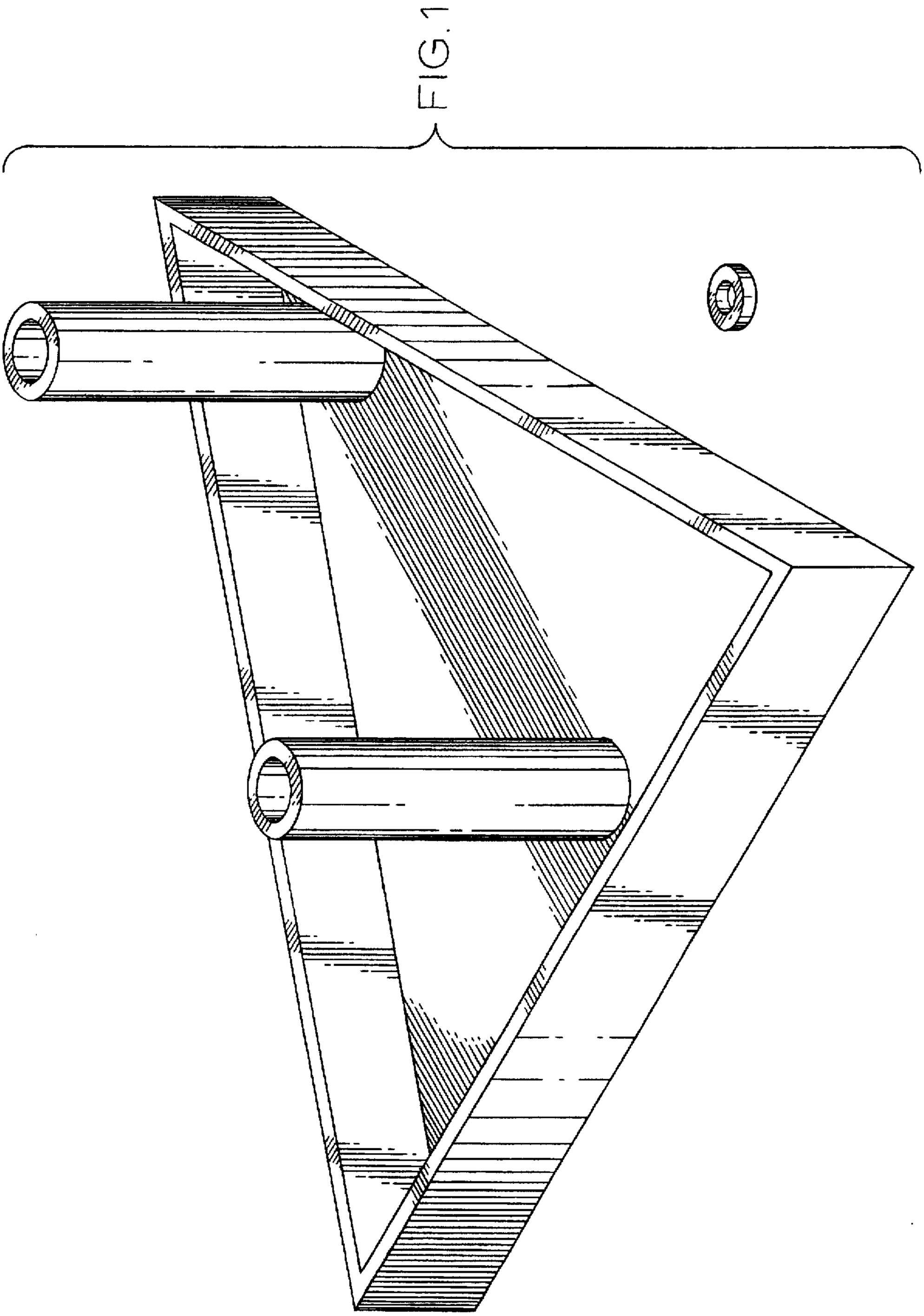

FIG. 2

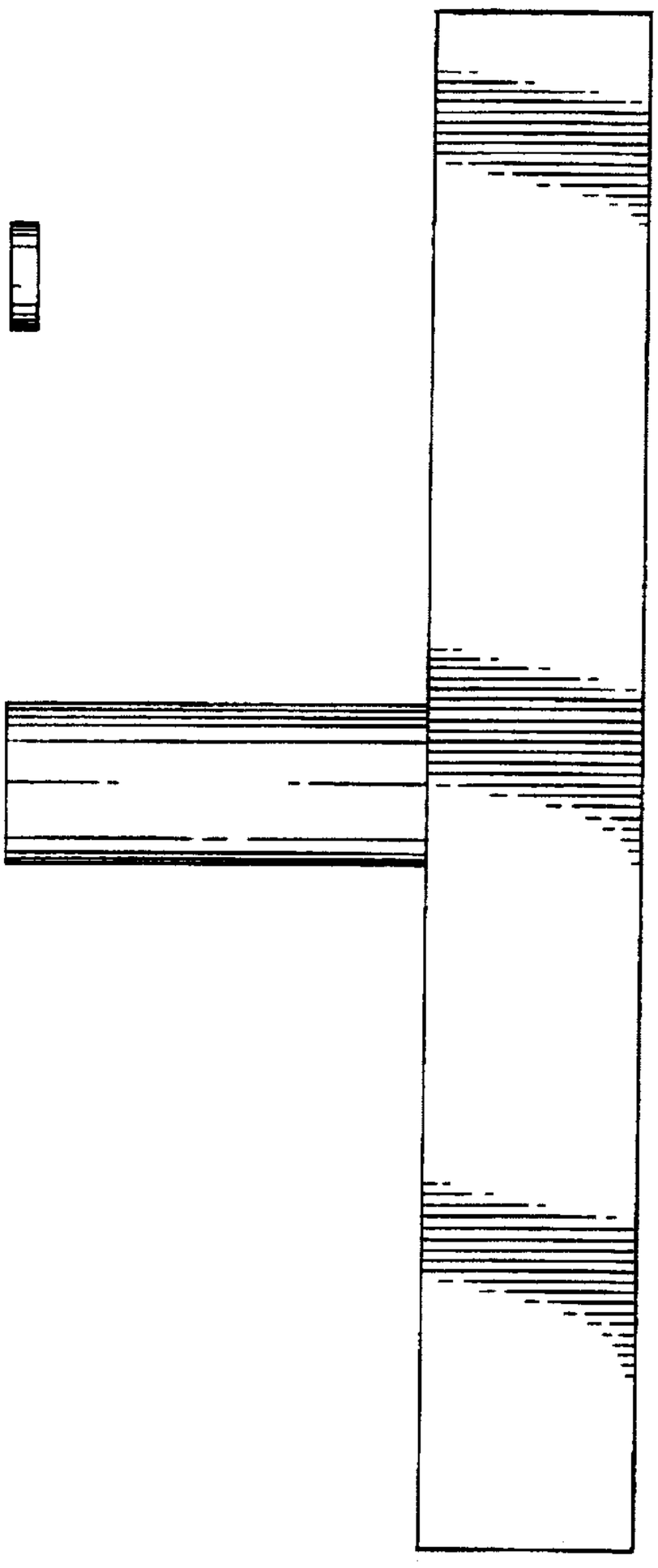

FIG. 3

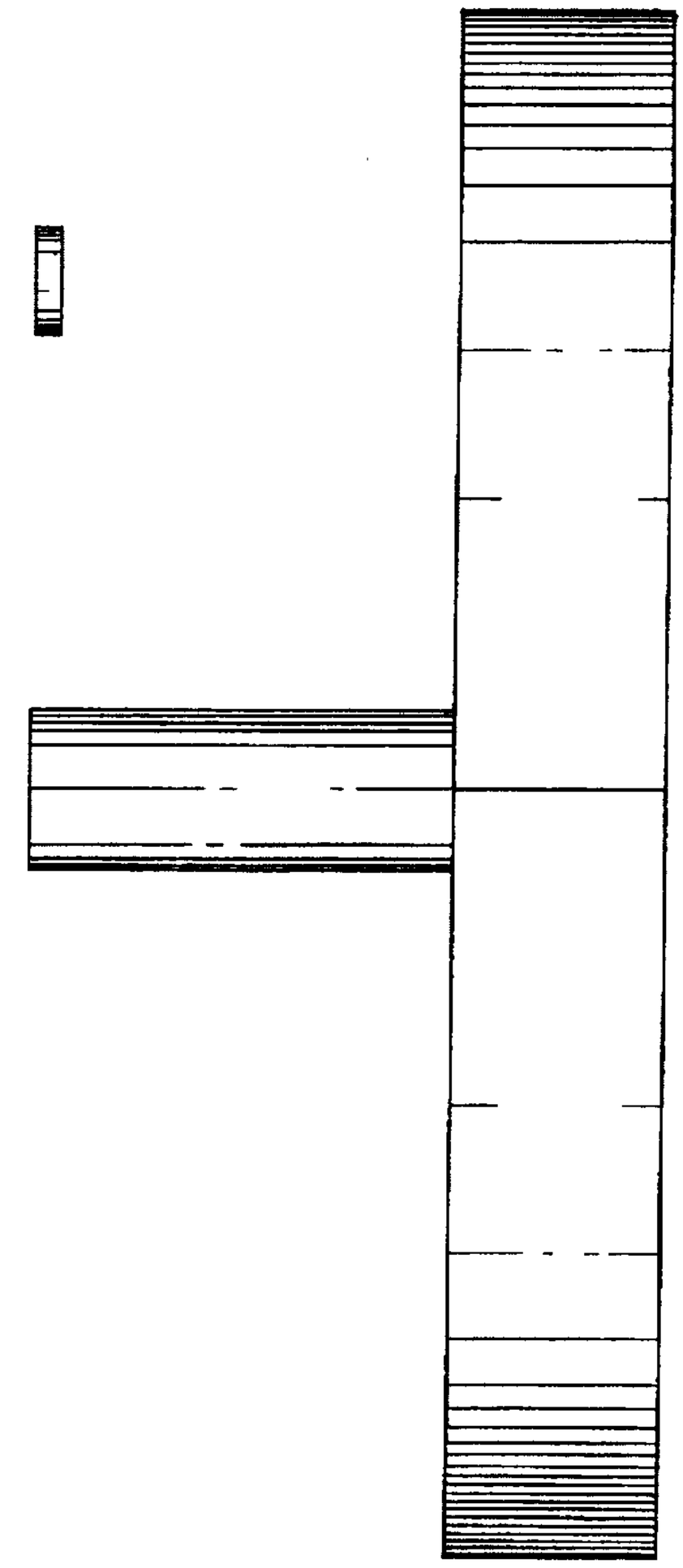

FIG. 4

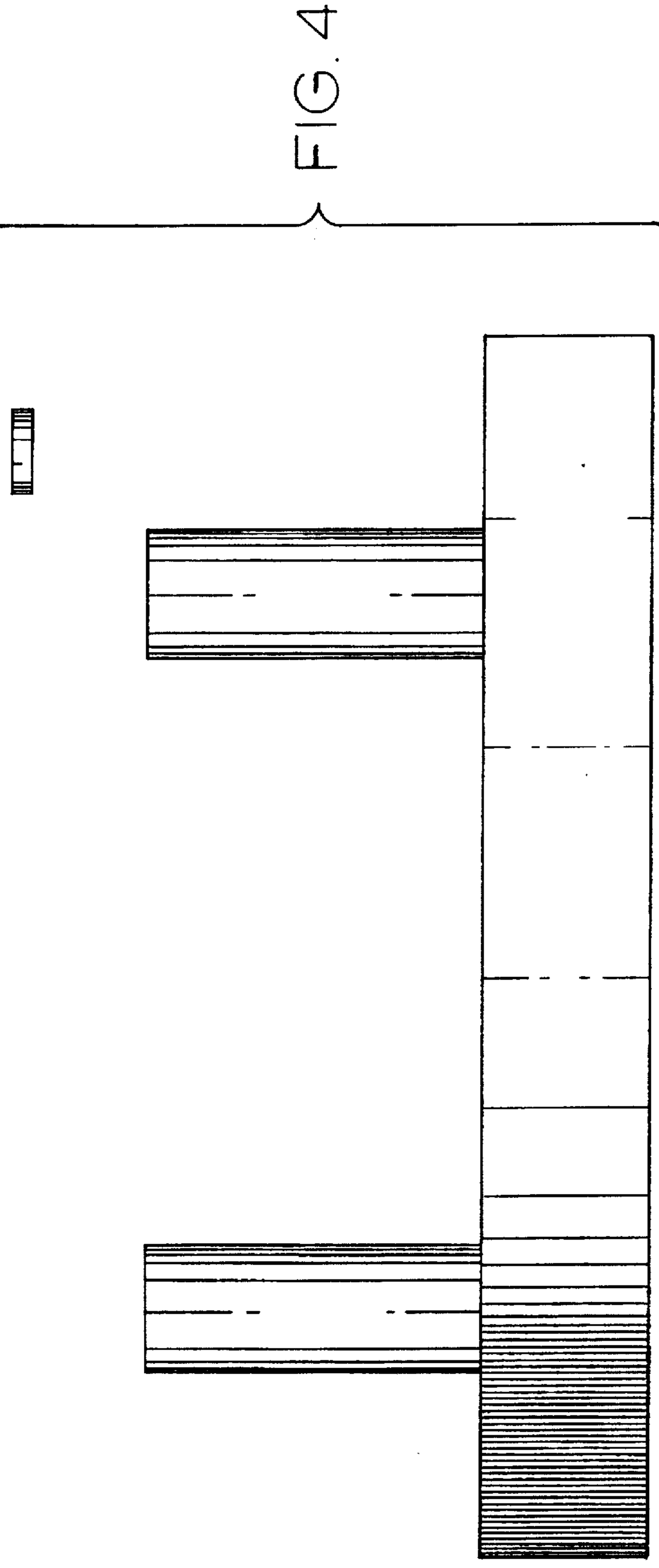

FIG. 5

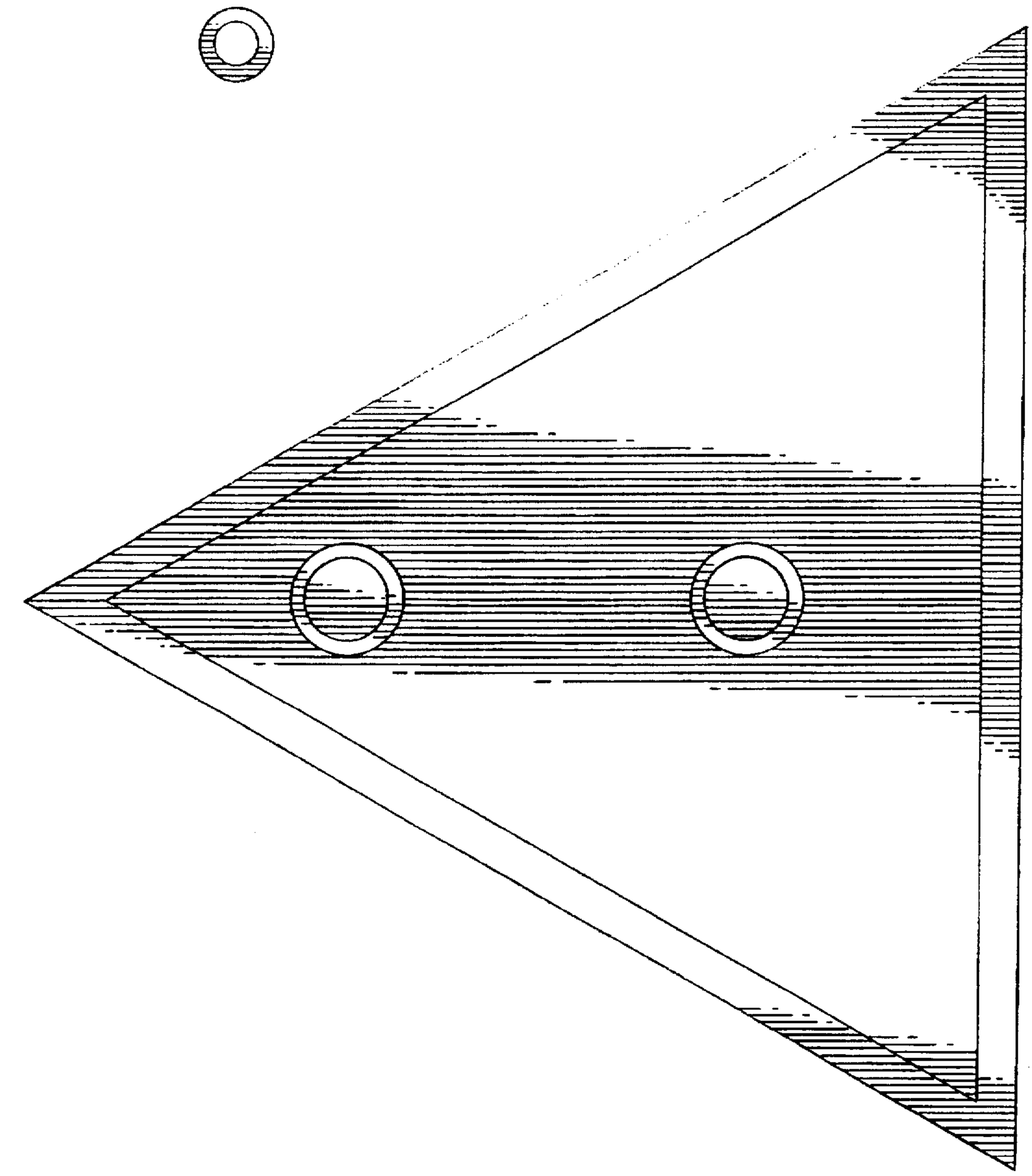

FIG 6

