US00D387177S

United States Patent [19]

Davis

[11] Patent Number: Des. 387,177

[45] Date of Patent: **Dec. 2, 1997

[54] **SURGICAL TRAY FOR SHARP SURGICAL INSTRUMENTS**

[76] Inventor: **Mark S. Davis**, 4453 Mount Paran Pkwy., Atlanta, Ga. 30327

[**] Term: **14 Years**

[21] Appl. No.: **39,063**

[22] Filed: **May 19, 1995**

[51] **LOC (6) Cl.** **24-01**

[52] **U.S. Cl.** **D24/227**

[58] **Field of Search** D24/227, 229, D24/216, 224; 206/439, 366, 363, 364, 365, 557; D7/356, 543, 550

[56] **References Cited**

U.S. PATENT DOCUMENTS

114,444	5/1871	Jones	D7/550
D. 149,518	5/1948	Rendler	D7/356
D. 226,838	5/1973	Ruskin	D7/543 X
D. 239,396	3/1976	Pappas	D24/224
D. 276,462	11/1984	Villarreal	D24/229
D. 301,167	5/1989	Ragbould et al.	D24/230 X
D. 345,605	3/1994	Garrow	D24/147 X
D. 363,002	10/1995	Douglas	D7/543
3,032,186	5/1962	Jenkins	206/365 X
4,183,435	1/1980	Thompson et al.	206/557
4,917,243	4/1990	Abrams et al.	206/365
4,978,510	12/1990	Smith	206/439 X
4,982,843	1/1991	Jones	206/366

OTHER PUBLICATIONS

William Sonoma Fall/Winter Catalog 1976 "Pan" item A p. 43.

Primary Examiner—Stella Reid
Attorney, Agent, or Firm—Ladas & Parry

[57] **CLAIM**

The ornamental design for a surgical tray for sharp surgical instruments, as shown and described.

DESCRIPTION

FIG. **1** is a top left side perspective view of a surgical tray for sharp surgical instruments, showing my new design, the broken line showing of the surgical instrument being for illustrative purposes only and forming no part of the claimed design;

FIG. **2** is a right side, elevational view thereof, the view from the left side being a mirror image thereof;

FIG. **3** is a top, plan view thereof;

FIG. **4** is an elevational view thereof from the end opposite the handle;

FIG. **5** is a bottom plan view thereof; and,

FIG. **6** is an elevational view thereof from the end with the handle.

1 Claim, 3 Drawing Sheets

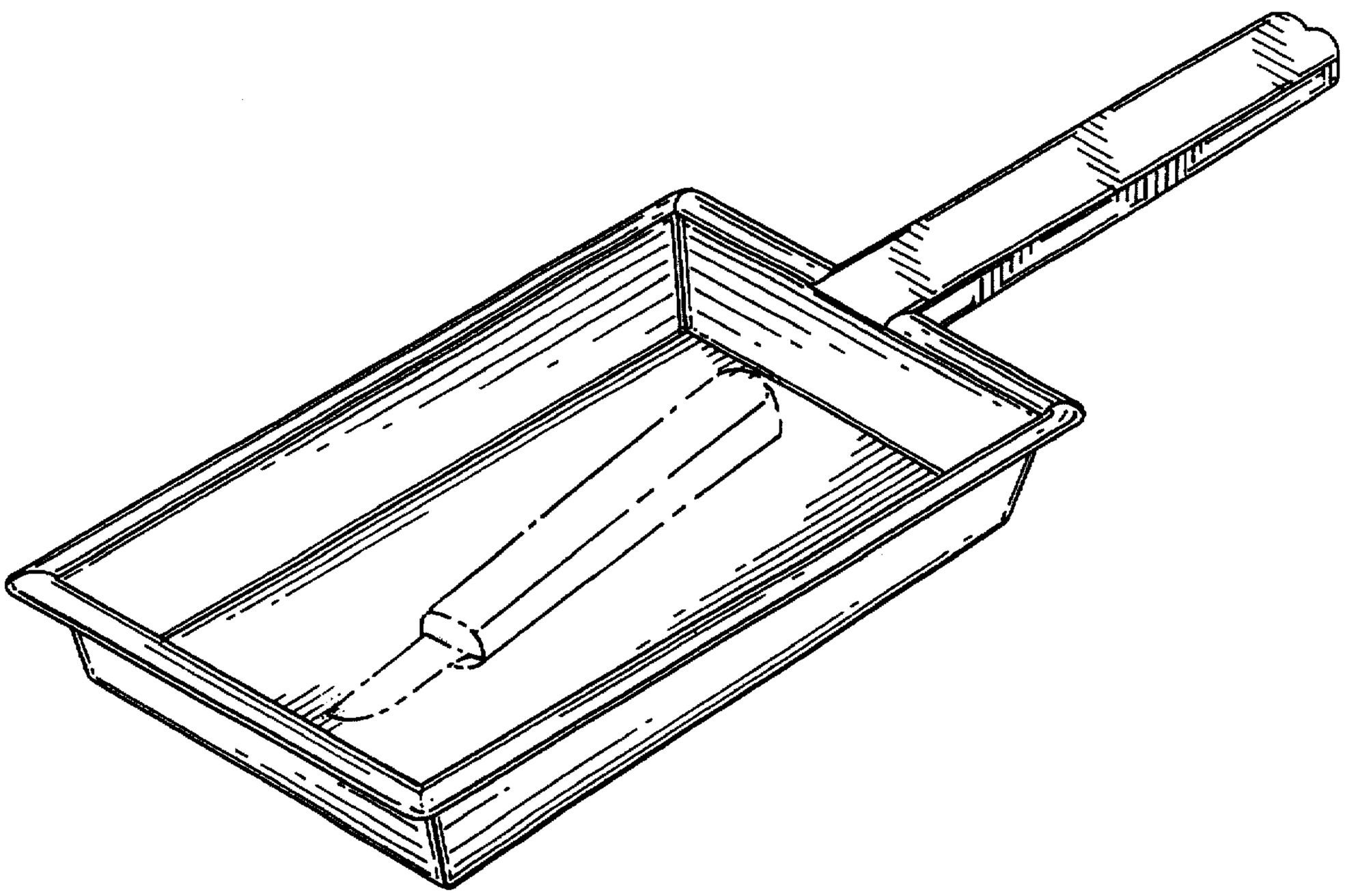

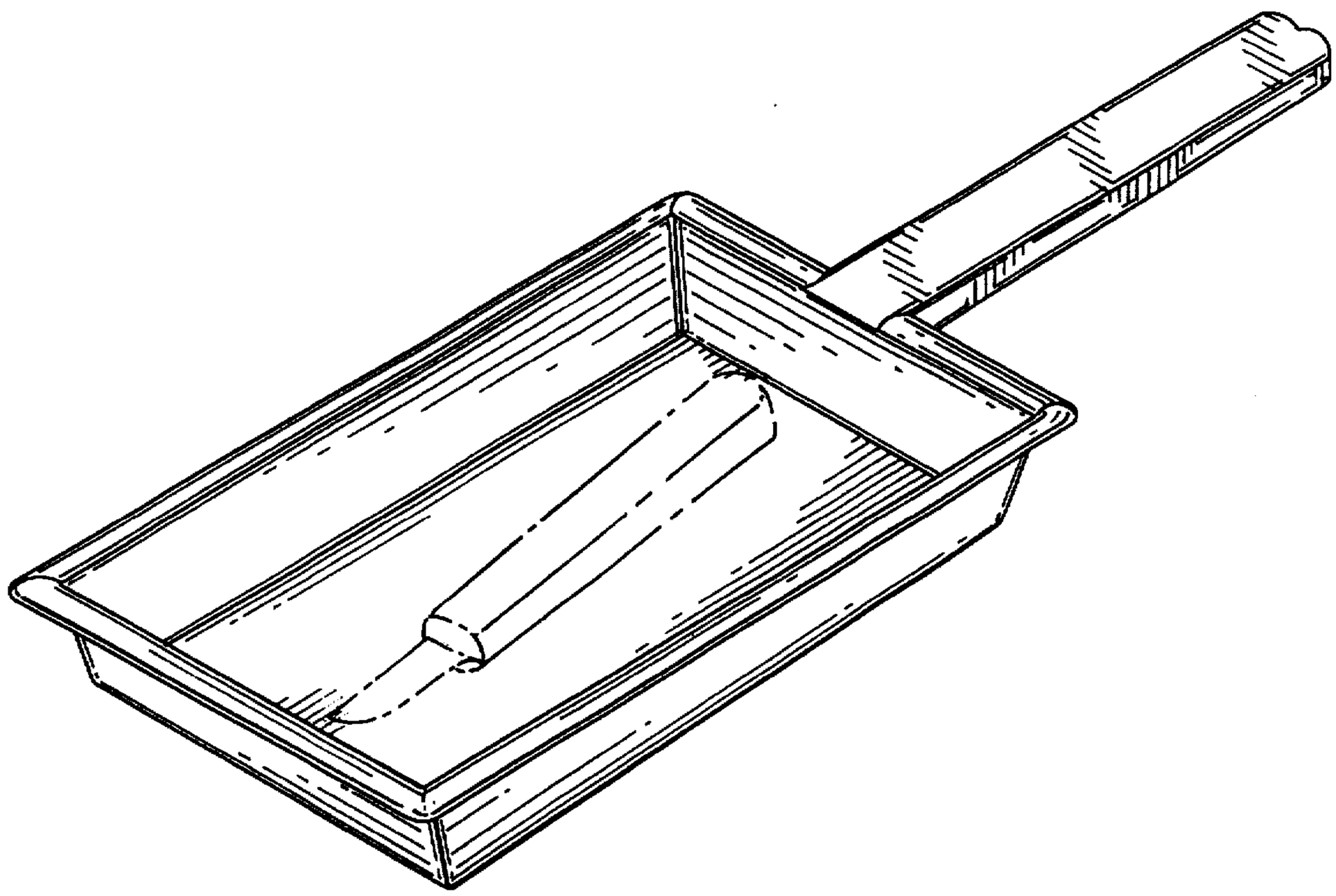

FIG. 1

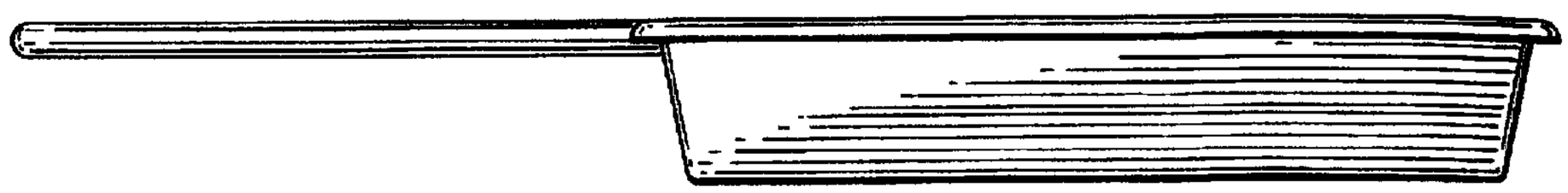

FIG. 2

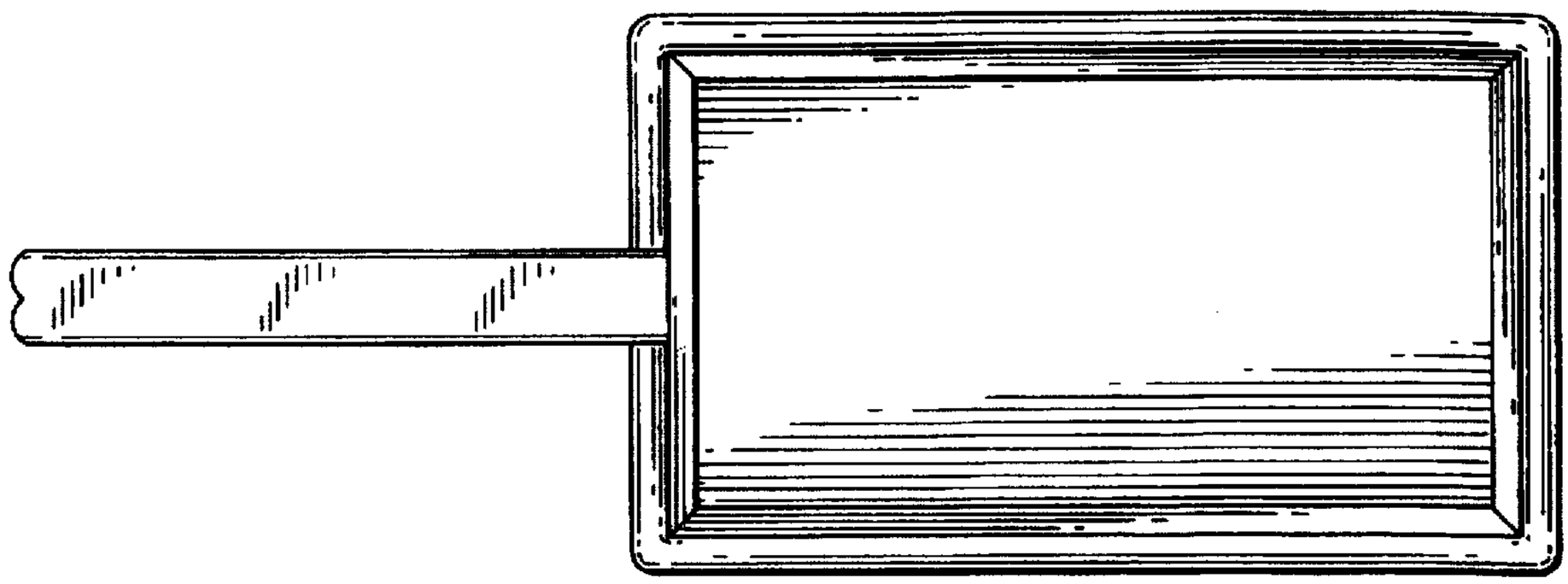

FIG. 3

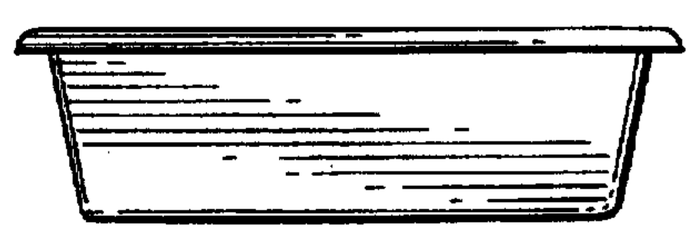

FIG. 4

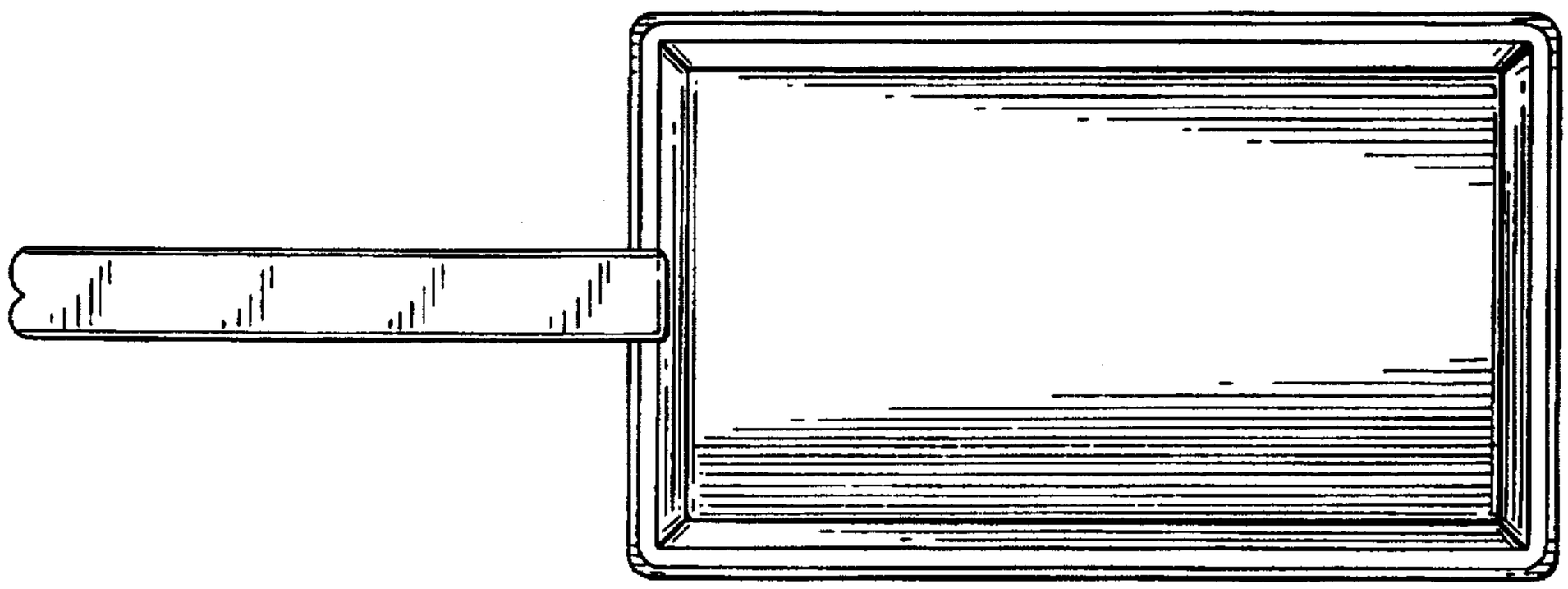

FIG. 5

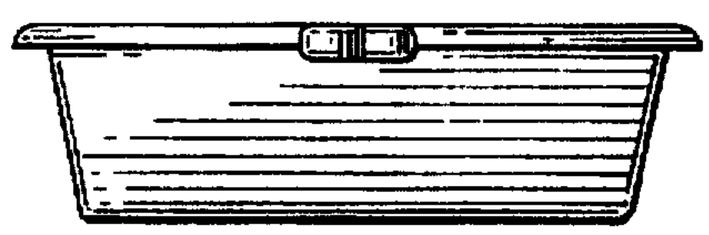

FIG. 6