US00D385715S

United States Patent [19]

Curry

[11] Patent Number: Des. 385,715

[45] Date of Patent: **Nov. 4, 1997

[54] **PACKET DISPENSER**

[76] Inventor: **John C. Curry**, P.O. Box 427, Port richey, Fla. 34673-0427

[**] Term: **14 Years**

[21] Appl. No.: **59,346**

[22] Filed: **Sep. 9, 1996**

[51] **LOC (6) Cl.** **06-99**

[52] **U.S. Cl.** **D6/408**; D7/589

[58] **Field of Search** D6/408, 470, 512, D6/515, 517; D9/339; D7/589, 590; 312/42, 50, 60; 211/49.1, 71, 59.2; 221/92, 191

[56] **References Cited**

U.S. PATENT DOCUMENTS

D. 316,638	5/1991	Oldorf	D6/408
D. 327,991	7/1992	Oldorf	D6/408
D. 376,513	12/1996	Curry	D7/589
4,767,022	8/1988	Oldorf	221/92

Primary Examiner—James Gandy
Assistant Examiner—Linda Brooks
Attorney, Agent, or Firm—Stanley M. Miller, Esq.

[57] **CLAIM**

The ornamental design for a packet dispenser, as shown and described.

DESCRIPTION

FIG. **1** is a top plan view of a packet dispenser, showing my new design;
FIG. **2** is a front elevational view thereof;
FIG. **3** is a right side elevational view thereof;
FIG. **4** is a bottom plan view thereof;
FIG. **5** is a rear elevational view thereof;
FIG. **6** is a left side elevational view thereof;
FIG. **7** is a perspective view thereof shown on a reduced scale; and,
FIG. **8** is a fragmentary view of FIG. **6** showing the front cover in partial opened position.

1 Claim, 2 Drawing Sheets

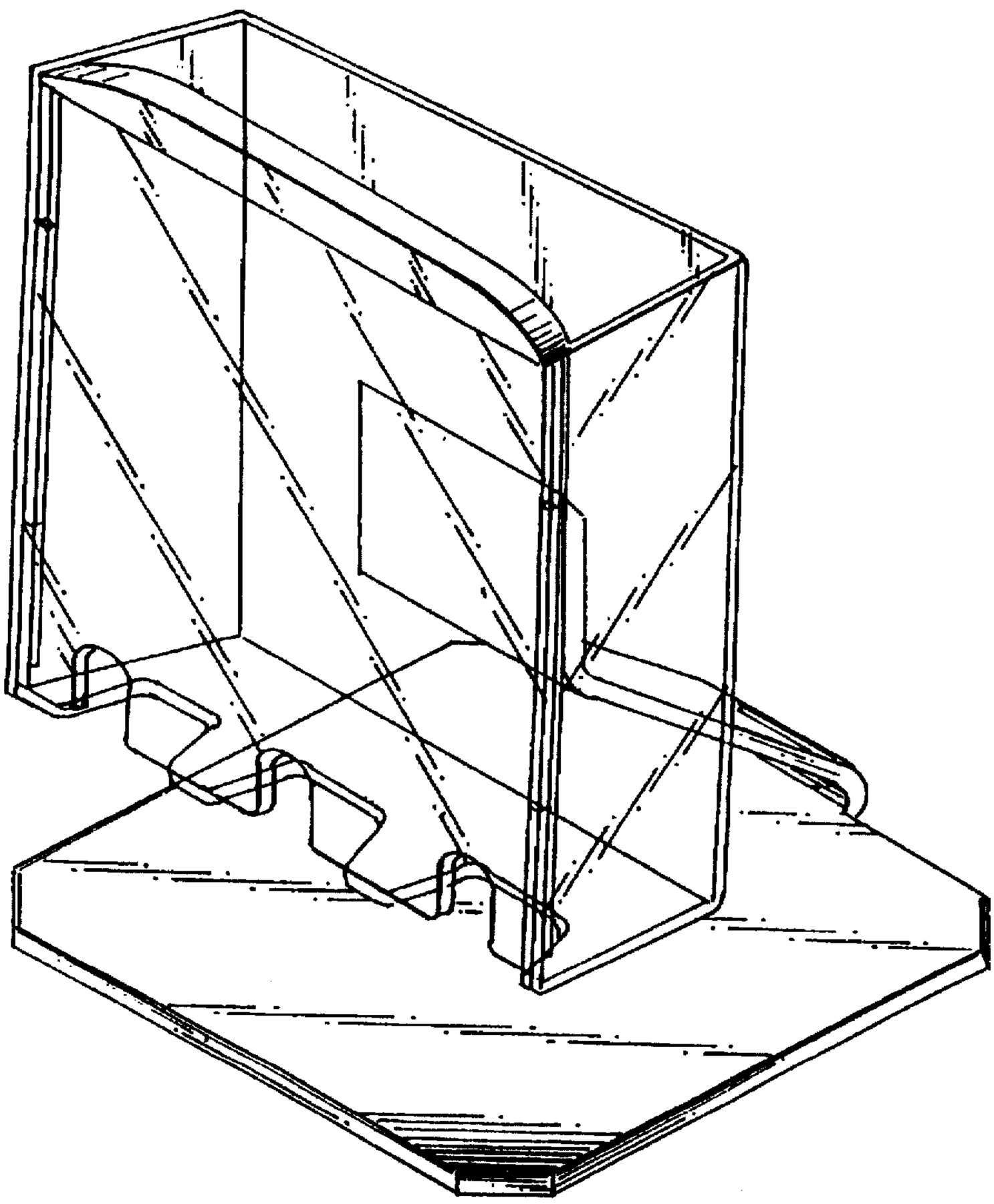

Fig. 1

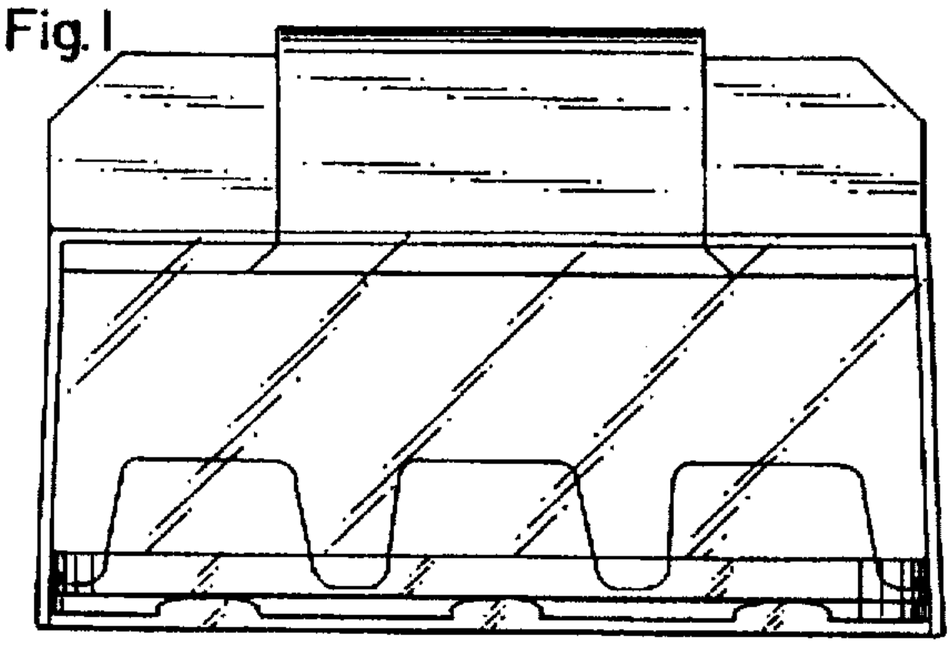

Fig. 2

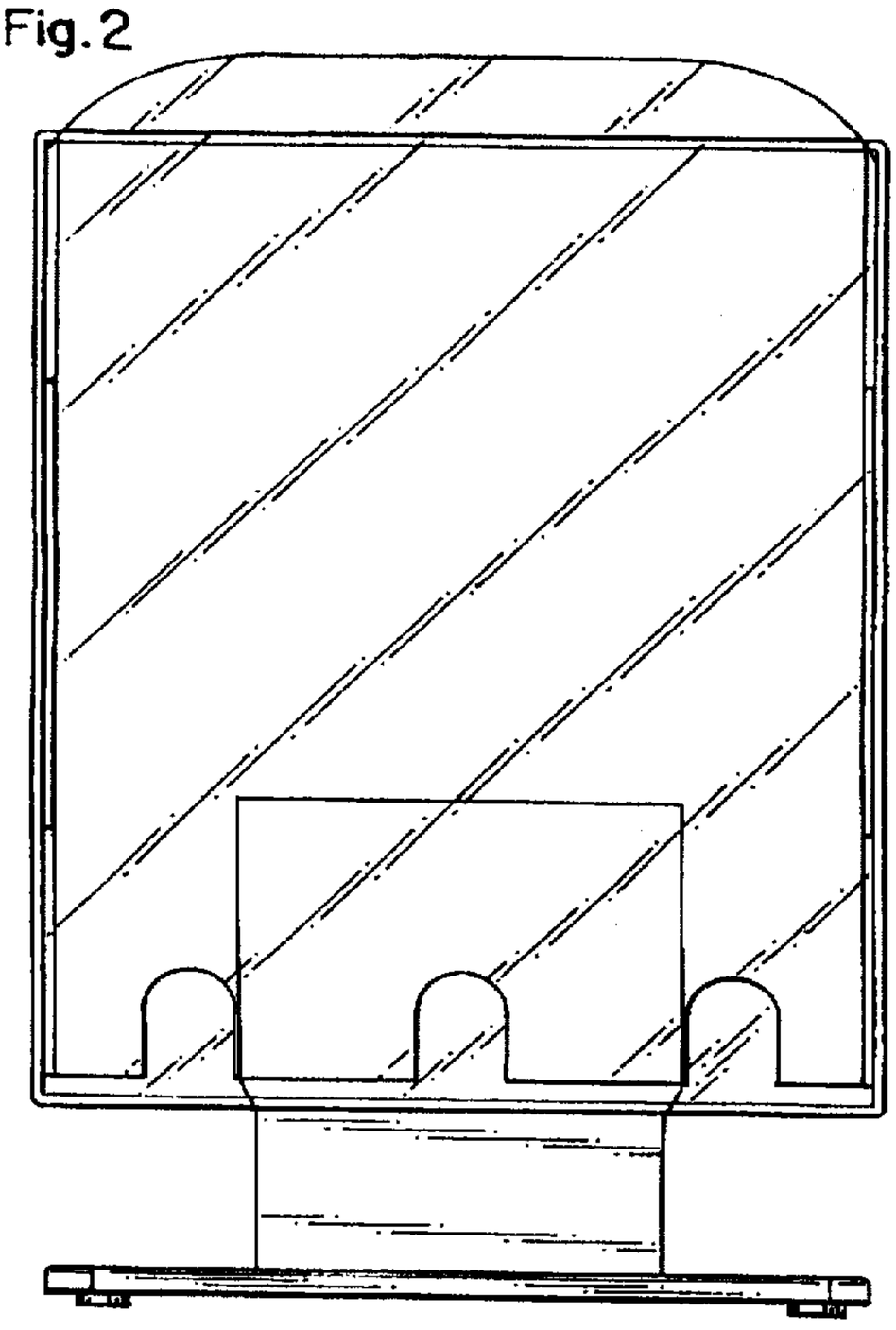

Fig. 3

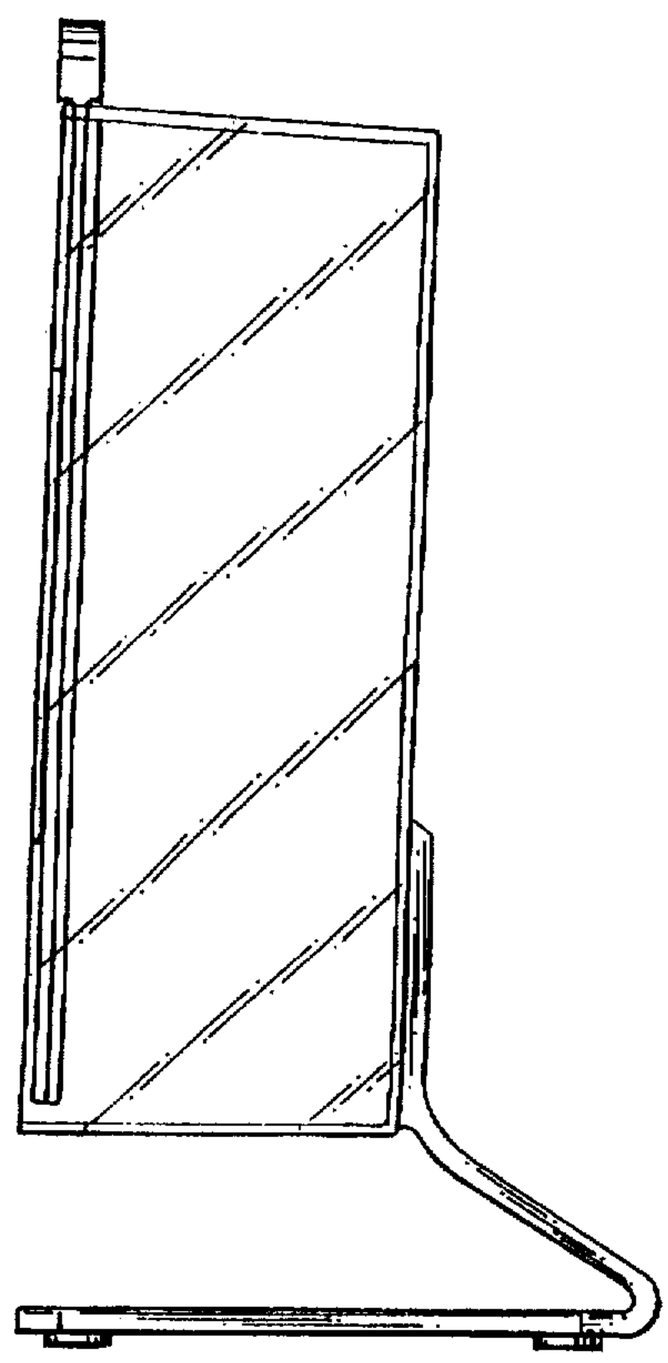

Fig. 4

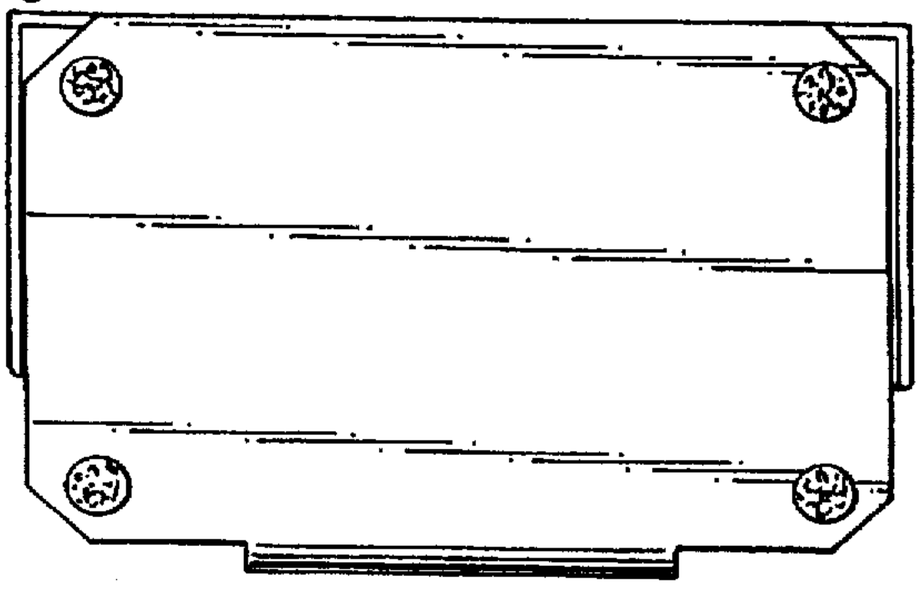

Fig. 7

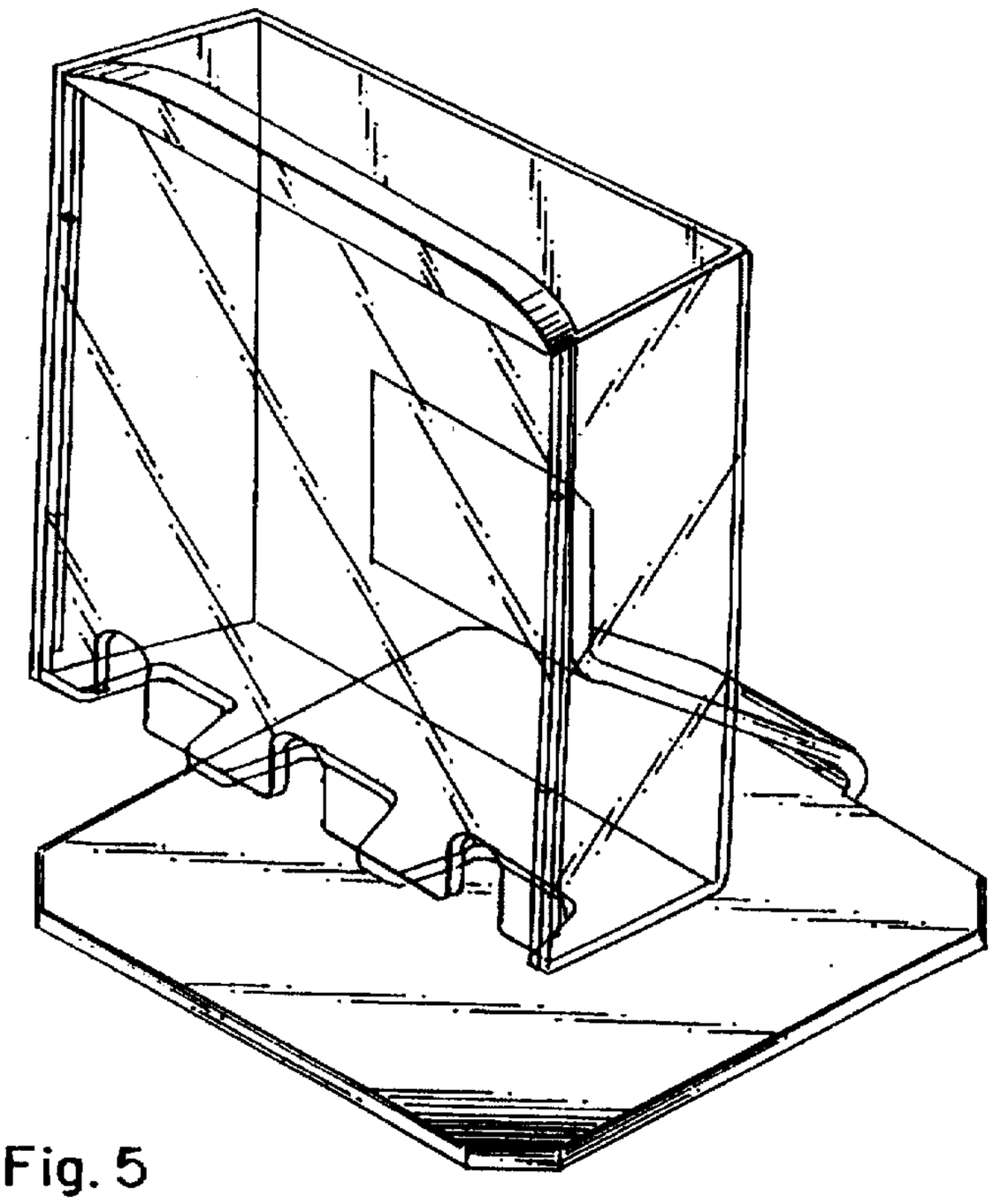

Fig. 8

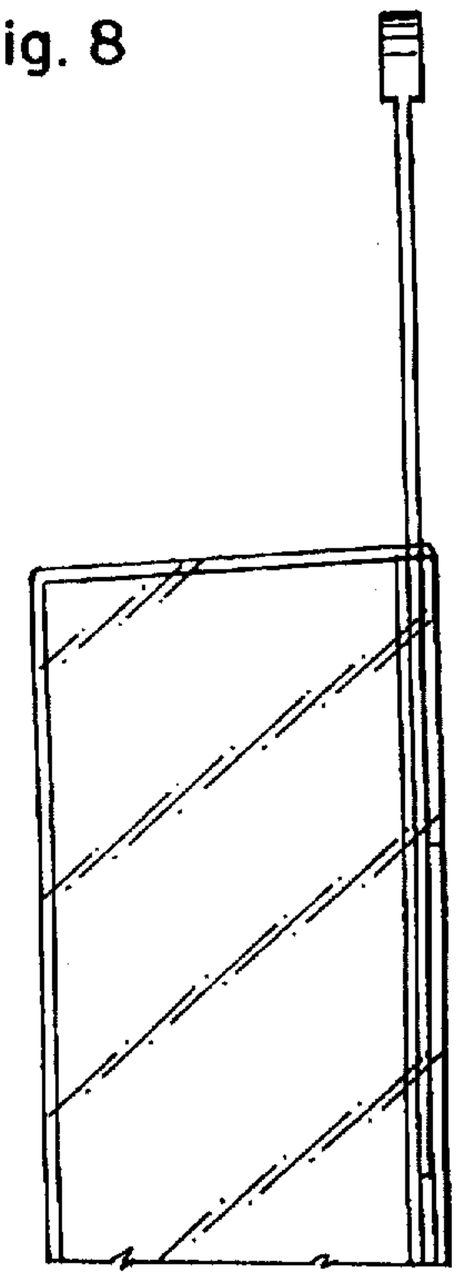

Fig. 5

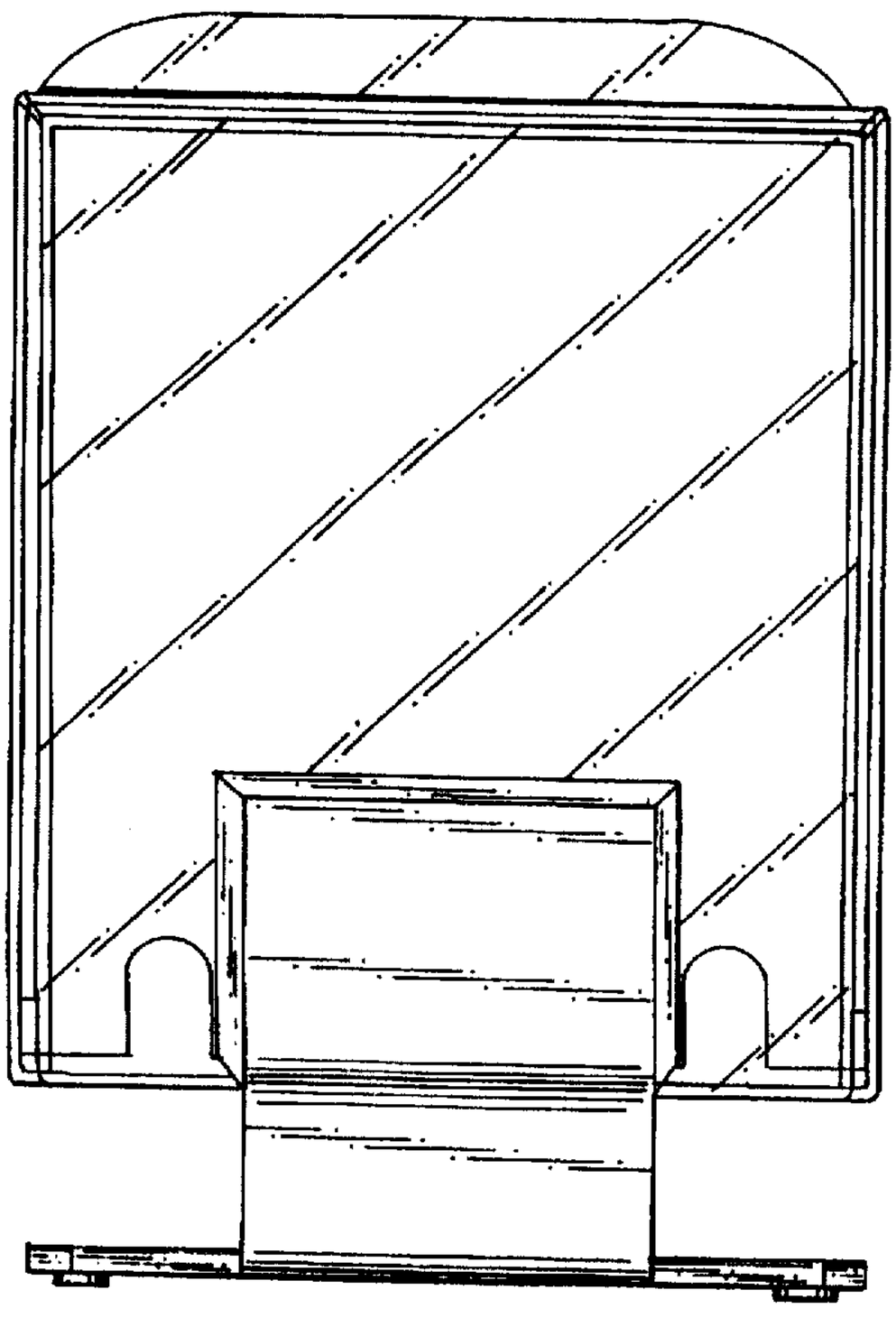
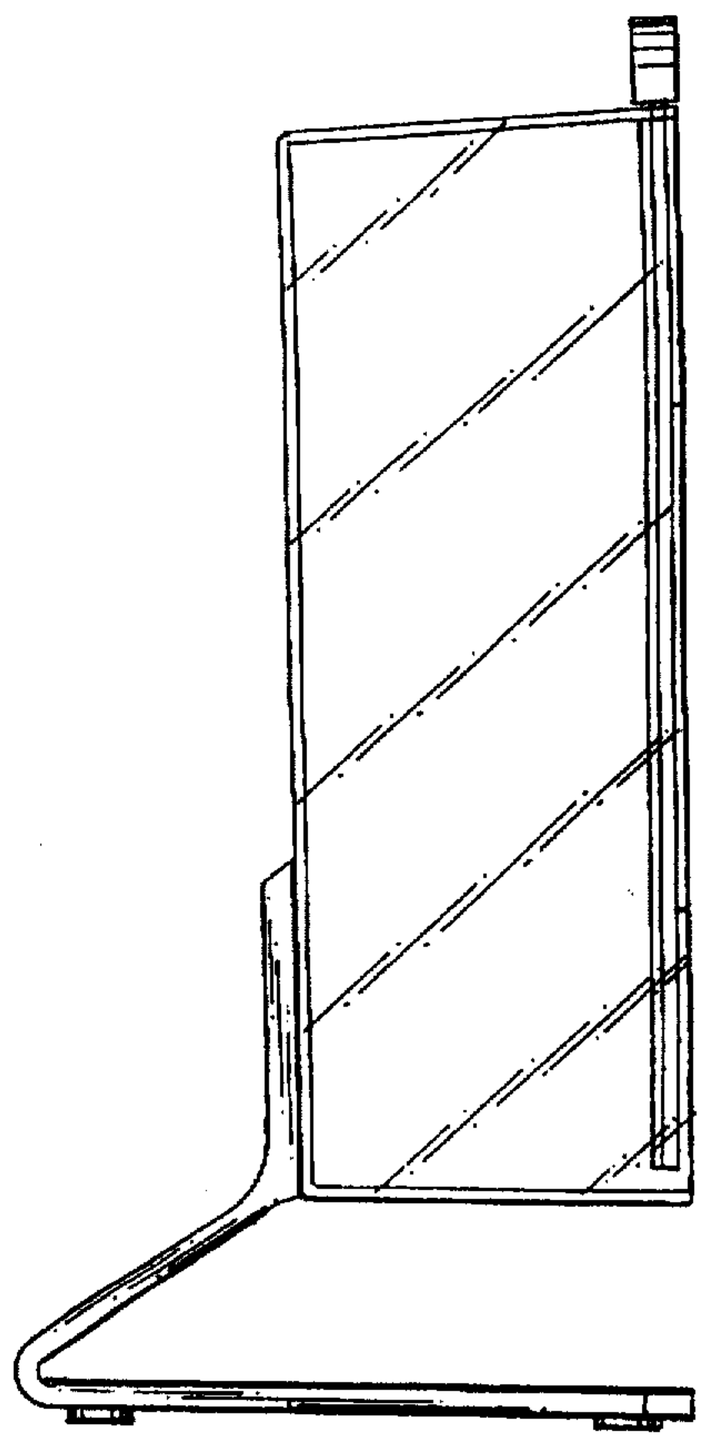
Fig. 6