US00D382797S

United States Patent [19]

House

[11] Patent Number: Des. 382,797

[45] Date of Patent: **Aug. 26, 1997

[54] **PACKAGE FOR COMPACT DISK**

[75] Inventor: **Richard F. House**, St. Charles, Ill.

[73] Assignee: **Jefferson Smurfit Corporation**, Clayton, Mo.

[**] Term: **14 Years**

[21] Appl. No.: **54,203**

[22] Filed: **May 8, 1996**

[51] **LOC (6) Cl.** **09-07**

[52] **U.S. Cl.** **D9/433**; D9/346; D19/1

[58] **Field of Search** D9/306, 346–347, D9/414–415, 418, 432–433, 456; D3/303; D6/407; D14/109, 114, 117, 120–122, 136; D19/1, 3, 26–27; 206/308.1, 308.3, 311, 312; 40/124.1

[56] **References Cited**

U.S. PATENT DOCUMENTS

D. 349,851	8/1994	Olsson	D9/346 X
D. 355,848	2/1995	Ivansons et al.	D9/346 X
D. 360,360	7/1995	Kiolbasa	D9/346 X
D. 369,106	4/1996	Baker et al.	D9/433
3,346,104	10/1967	Marsh	D9/433 X
5,085,318	2/1992	Leverick	206/308.1

FOREIGN PATENT DOCUMENTS

8702565	5/1989	Netherlands	206/308.1
93024927	12/1993	WIPO	206/308.1
94027892	12/1994	WIPO	206/308.1

Primary Examiner—Sandra L. Morris
Assistant Examiner—Nanda Bondade
Attorney, Agent, or Firm—Richard W. Carpenter

[57] **CLAIM**

The ornamental design for a package for compact disk, as shown and described.

DESCRIPTION

FIG. **1** is a front, top and left side perspective view of a package for compact disc showing my new design, shown partially open;
FIG. **2** is a top plan view thereof; and,
FIG. **3** is a reduced rear elevational view thereof; shown fully open.

1 Claim, 1 Drawing Sheet

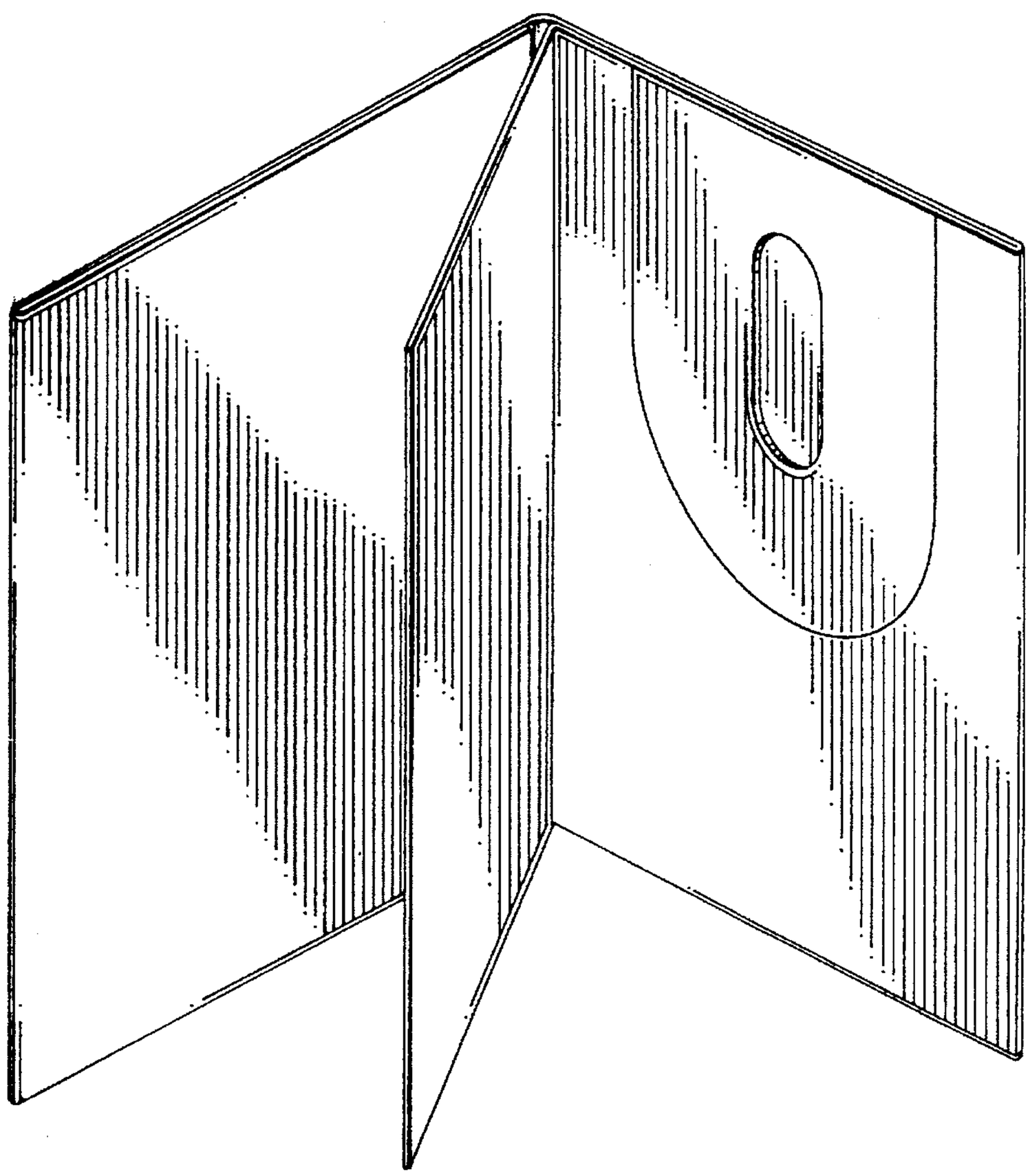

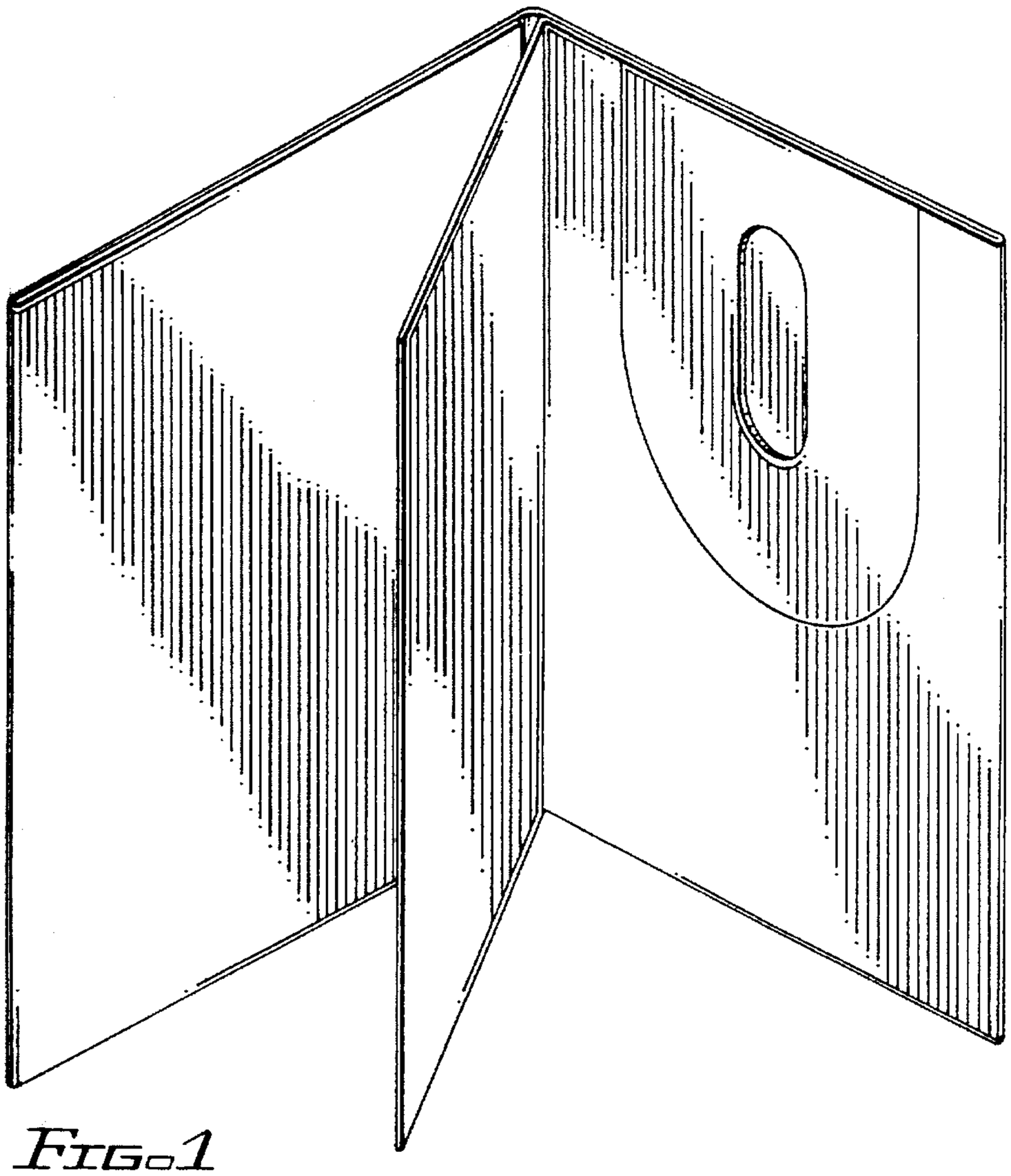

FIG. 1

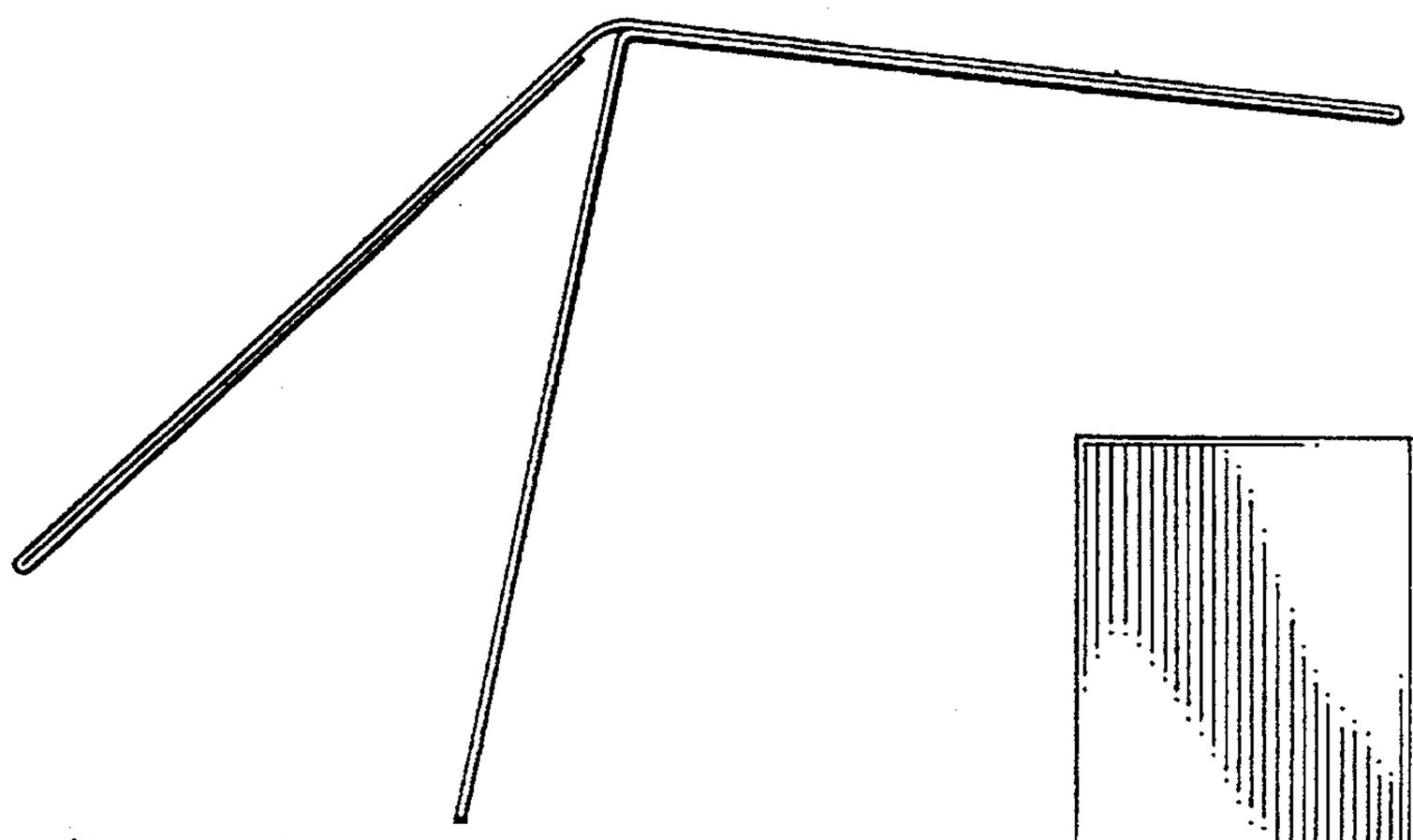

FIG. 2

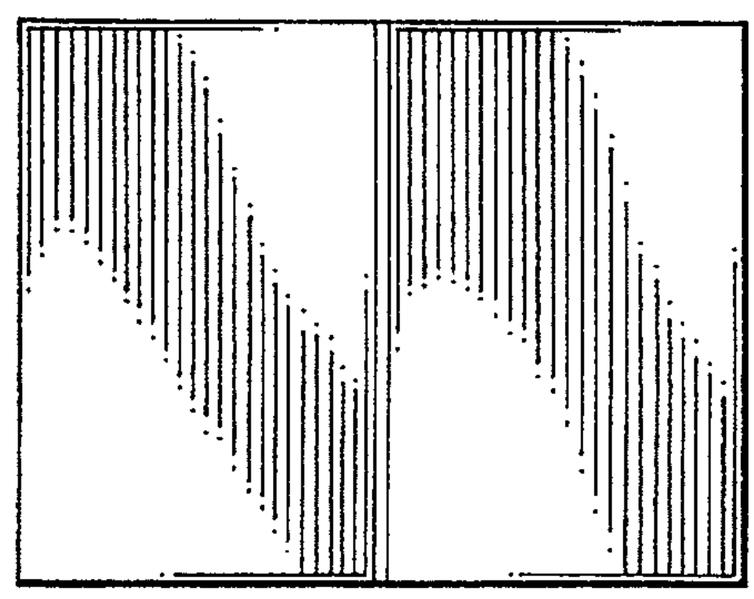

FIG. 3