US00D378564S

United States Patent [19]

Hall

[11] **Patent Number: Des. 378,564**

[45] **Date of Patent: **Mar. 25, 1997**

[54] **UTENSIL SUPPORT**

[76] Inventor: **Anson L. Hall**, P.O. Box 87, Nine Garfield St., Exeter, N.H. 03833

[**] Term: **14 Years**

[21] Appl. No.: **54,926**

[22] Filed: **May 24, 1996**

[52] **U.S. Cl.** **D7/637**

[58] **Field of Search** D7/637–641; 211/13, 211/60.1, 70.6, 70.1, 70.8, 70.7, 72, 73; 220/890; 248/37.3, 174, 176.1

[56] **References Cited**

U.S. PATENT DOCUMENTS

D. 244,340	5/1977	Ashton	D7/641
4,834,328	5/1989	Hall .	
4,858,863	8/1989	Lin	248/174
4,893,768	1/1990	Hall .	

Primary Examiner—Terry A. Wallace
Attorney, Agent, or Firm—Salter & Michaelson

[57] **CLAIM**

The ornamental design for a utensil support, as shown and described.

DESCRIPTION

FIG. **1** is a perspective view of a utensil support showing my new design;
FIG. **2** is a front elevational view thereof;
FIG. **3** is a rear elevational view thereof;
FIG. **4** is a top plan view thereof;
FIG. **5** is a bottom plan view thereof;
FIG. **6** is an end view thereof; and,
FIG. **7** is a view of the opposite end thereof.
The portions shown in broken lines in FIG. **1** are for informational purposes only and form no part of the instant design.

1 Claim, 2 Drawing Sheets

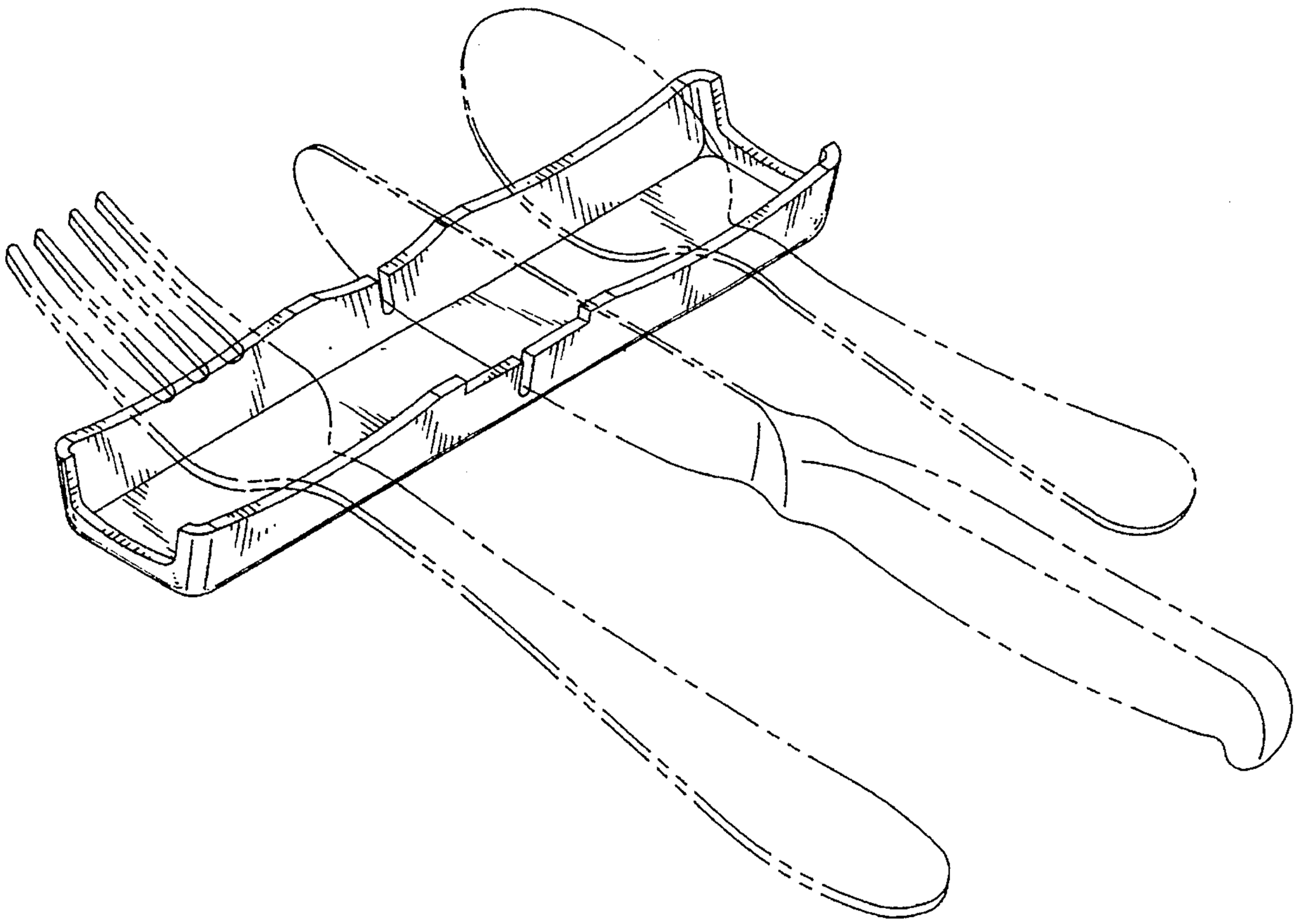

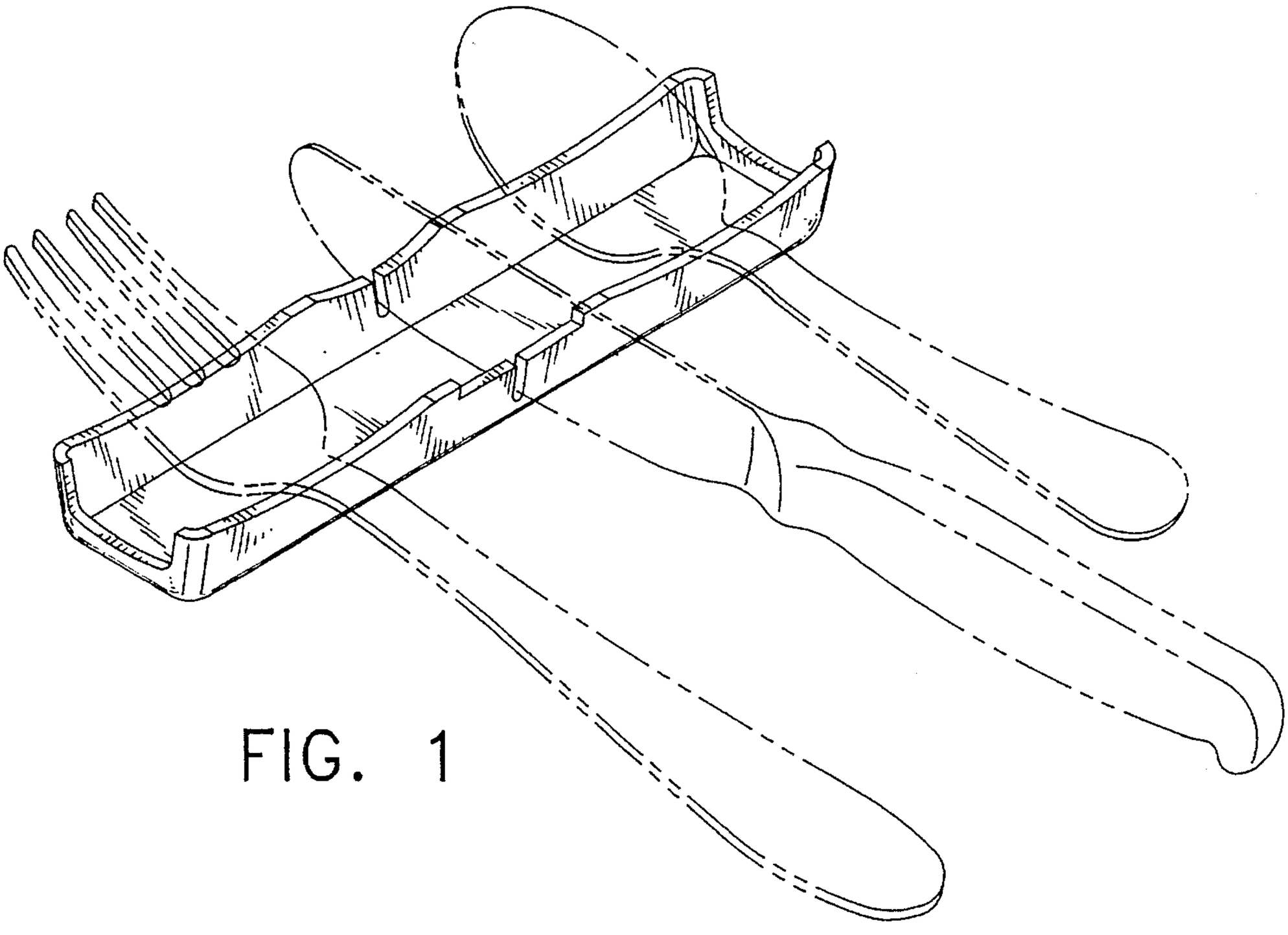

FIG. 1



FIG. 2

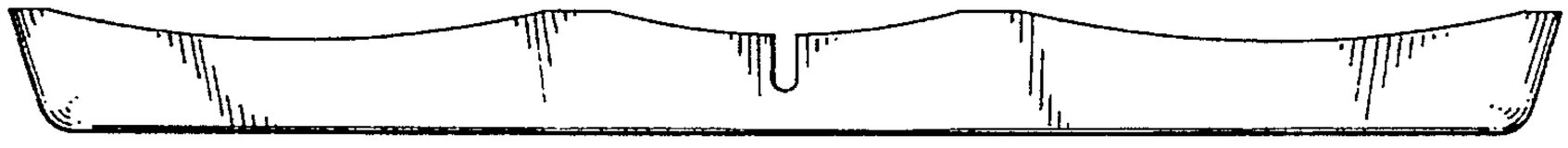

FIG. 3

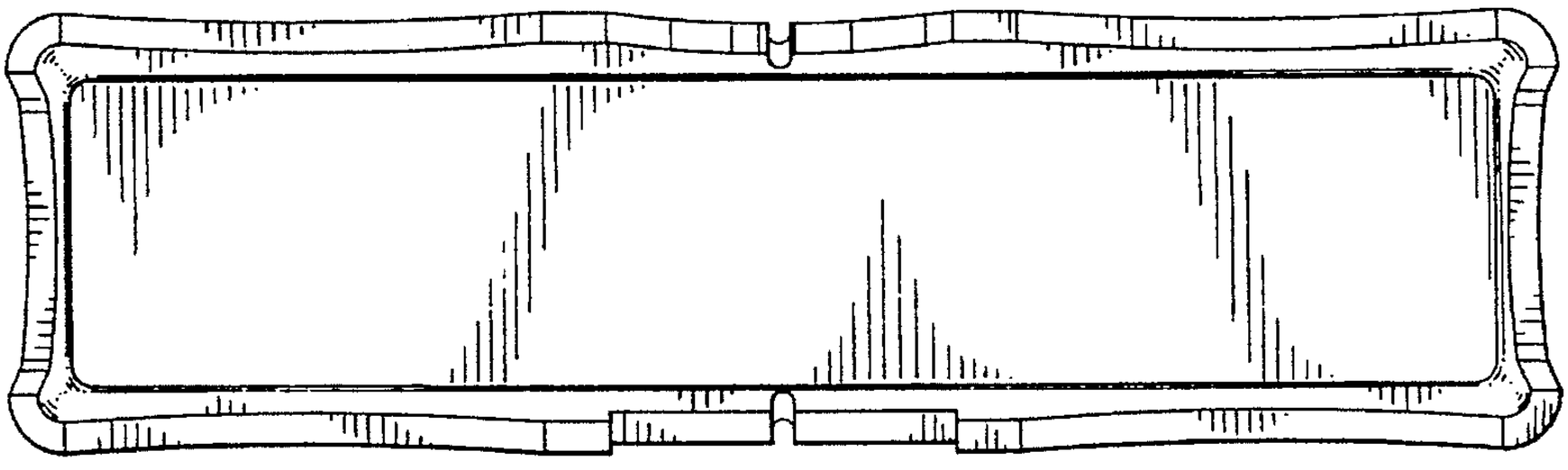

FIG. 4

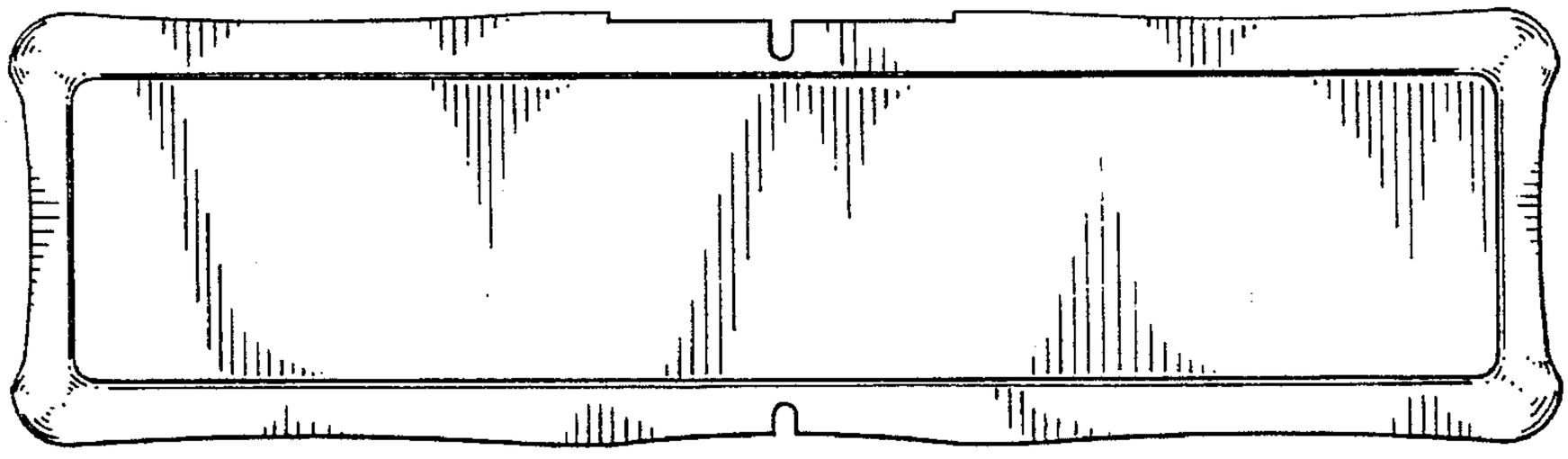

FIG. 5

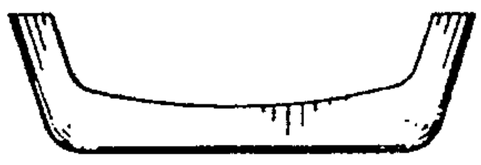

FIG. 6

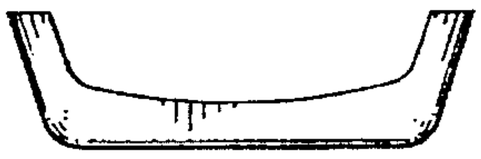

FIG. 7