US00D377932S

United States Patent [19]

Schena et al.

[11] Patent Number: Des. 377,932

[45] Date of Patent: **Feb. 11, 1997

[54] **MECHANICAL DIGITIZING ARM USED TO INPUT THREE DIMENSIONAL DATA INTO A COMPUTER**

[75] Inventors: **Bruce M. Schena**, Menlo Park; **Louis B. Rosenberg**, Pleasanton, both of Calif.

[73] Assignee: **Immersion Human Interface Corporation**, San Jose, Calif.

[**] Term: **14 Years**

[21] Appl. No.: **45,857**

[22] Filed: **Oct. 31, 1995**

[52] **U.S. Cl.** **D14/114**; D10/63; D15/199

[58] **Field of Search** ..... D14/100, 105, D14/107, 114; 364/413.13, 560, 571.05; 433/72; 90/13.5; 128/653.1; 33/1 CC, 1 MP, 551, 502, 503; D15/199; D10/63

[56] **References Cited**

U.S. PATENT DOCUMENTS

D. 300,935	5/1989	Maddock et al.	D15/199
2,906,179	9/1959	Bower	90/13.5
3,531,868	10/1970	Stevenson	33/174
3,890,958	6/1975	Fister et al.	128/2 S
3,944,798	3/1976	Eaton	235/151.3
4,477,973	10/1984	Davies	33/1 CC
4,571,834	2/1986	Fraser et al.	33/1 PT
4,593,470	6/1986	Davies	33/1 CC
4,638,798	1/1987	Shelden et al.	128/303 B
4,653,011	3/1987	Iwano	364/513
4,676,002	6/1987	Slocum	33/1 MP
4,679,331	7/1987	Koontz	33/551
4,703,443	10/1987	Moriyasu	364/559
4,750,487	6/1988	Zanetti	128/303 B
4,769,763	9/1988	Trieb et al.	364/559
4,791,934	12/1988	Brunnett	128/653
4,819,195	4/1989	Bell et al.	364/571.05
4,888,877	12/1989	Enderle et al.	33/559
4,891,889	1/1990	Tomelleri	33/503
4,942,545	7/1990	Sapia	364/571.01
4,945,501	7/1990	Bell et al.	364/571.05
4,962,591	10/1990	Zeller et al.	33/502
4,982,504	1/1991	Söderberg et al.	33/502
5,040,306	8/1991	McMurtry et al.	33/556
5,050,608	9/1991	Watanabe et al.	128/653 R
5,088,046	2/1992	McMurtry	364/474.03
5,088,055	2/1992	Oyama	364/560
5,131,844	7/1992	Marinaccio et al.	433/72
5,148,377	9/1992	McDonald	364/560
5,187,874	2/1993	Takahashi et al.	33/502
5,189,806	3/1993	McMurtry et al.	33/503
5,204,824	4/1993	Fujimaki	364/473.03
5,230,623	7/1993	Guthrie et al.	433/72
5,251,127	10/1993	Raab	364/413.13
5,251,156	10/1993	Heier et al.	364/559
5,259,120	11/1993	Chapman et al.	33/502
5,402,582	4/1995	Raab	33/503
5,408,754	4/1995	Raab	33/503
5,412,880	5/1995	Raab	33/503

FOREIGN PATENT DOCUMENTS

WO8804404	6/1988	WIPO	33/1 MP

OTHER PUBLICATIONS

"3D Human Interface Tool," 1994 Immersion Human Interface Corporation.

"The Personal Digitizer," 1994 Immersion Human Interface Corporation.

"High Performance Model of the Immersion Probe," Immersion Corporation, Immersion Probe–MD™.

"Cursor Waldo," Designer's Corner, Useful Technology for Your Idea File, Design News, Mar. 7, 1994, p. 63.

Primary Examiner—Freda Nunn

Attorney, Agent, or Firm—Hickman Beyer & Weaver

[57] **CLAIM**

The ornamental design for a mechanical digitizing arm used to input three dimensional data into a computer, as shown and described.

DESCRIPTION

FIG. **1** is a left side elevational view of a mechanical digitizing arm used to input three dimensional data into a computer in a rest position in accordance with the present design;

FIG. **2** is a front elevational view thereof;

FIG. **3** is a right side elevational view thereof;

FIG. **4** is a rear elevational view thereof;

FIG. **5** is a top plan view thereof;

FIG. **6** is a bottom plan view thereof; and,

FIG. **7** is a perspective view of the present design in a partially extended position.

1 Claim, 6 Drawing Sheets

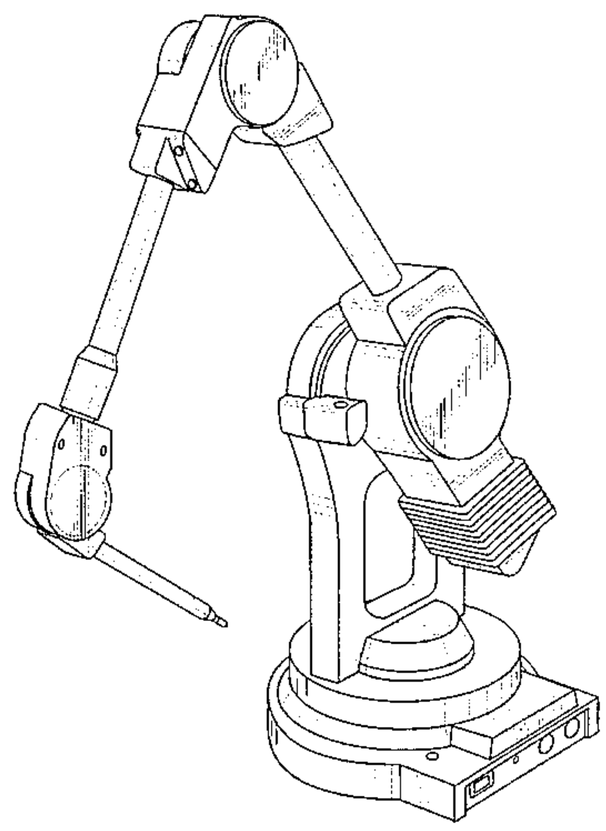

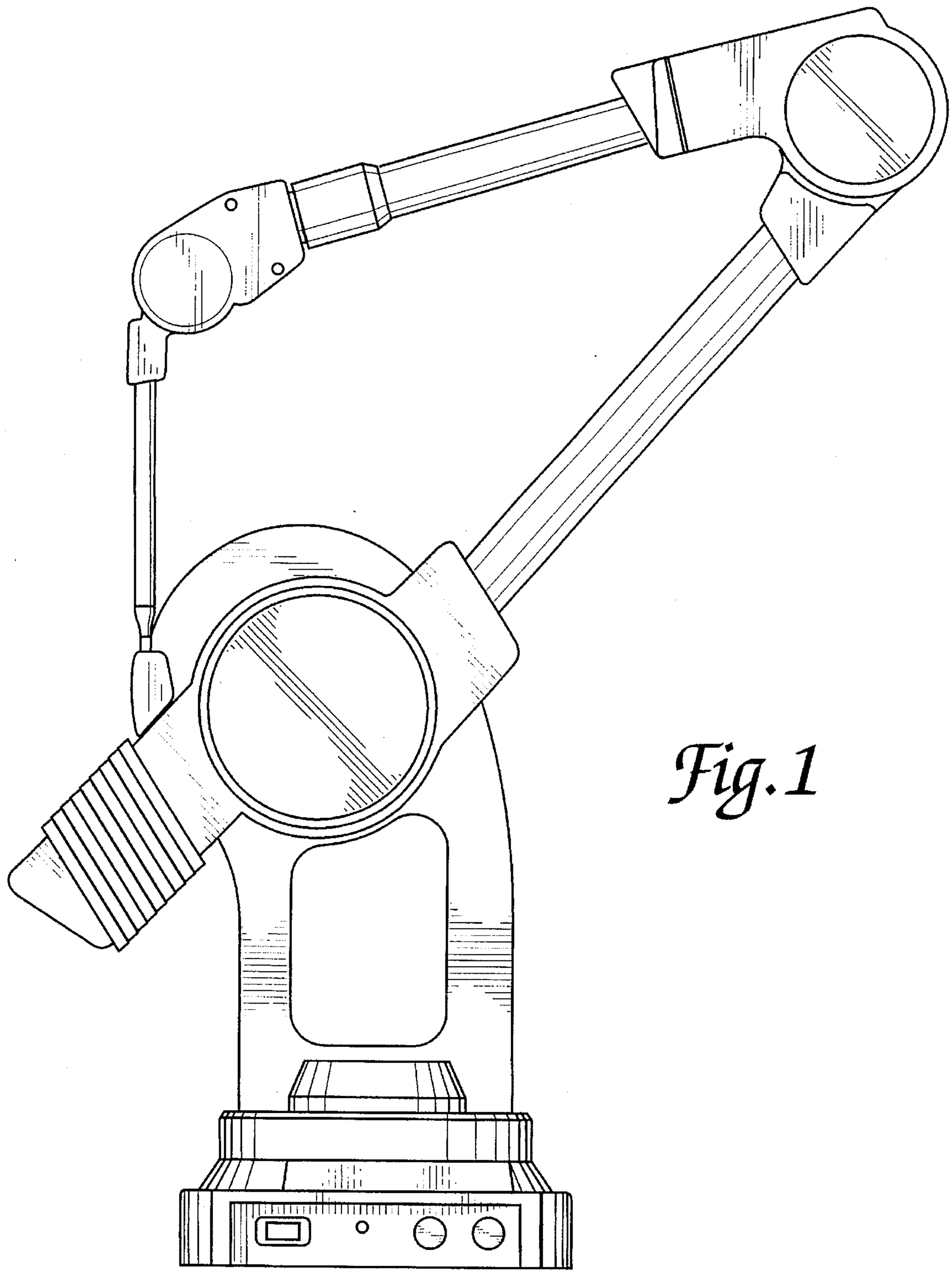

Fig. 1

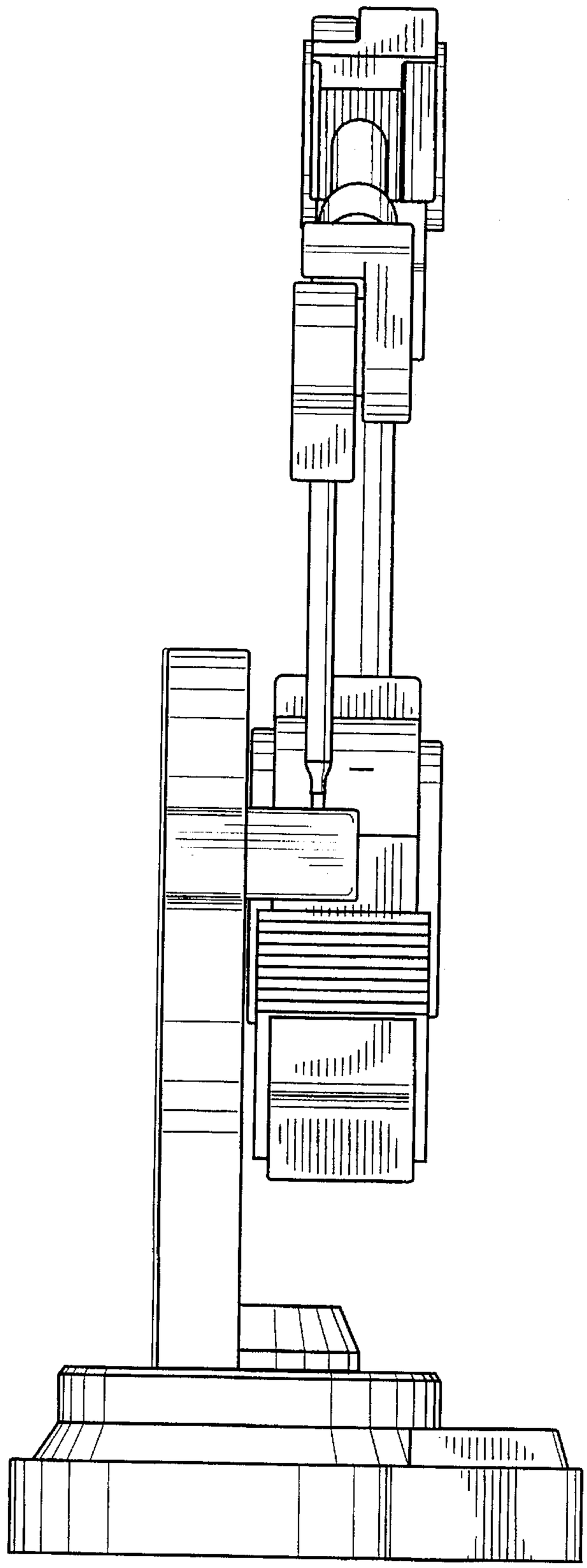

Fig. 2

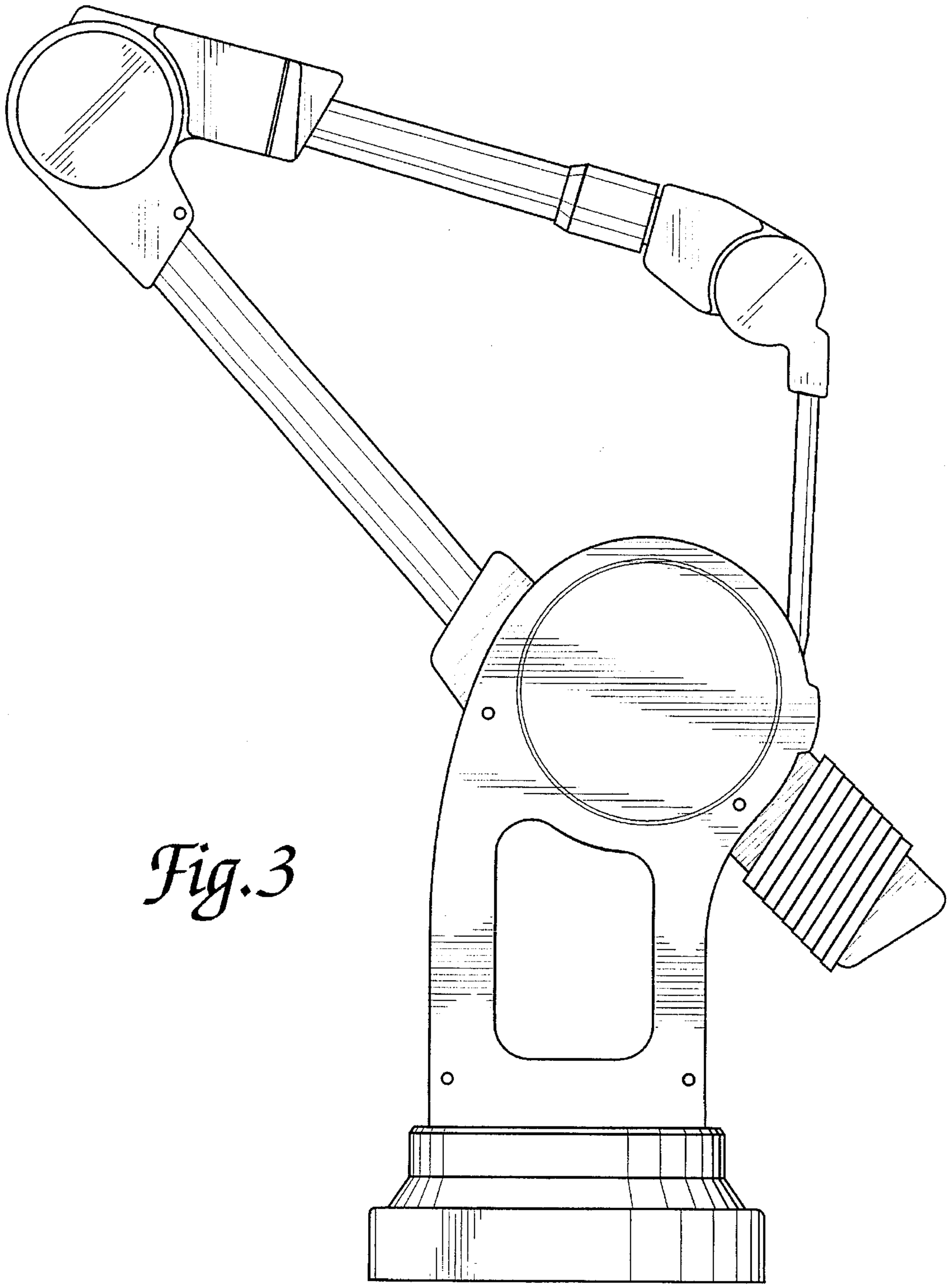

Fig.3

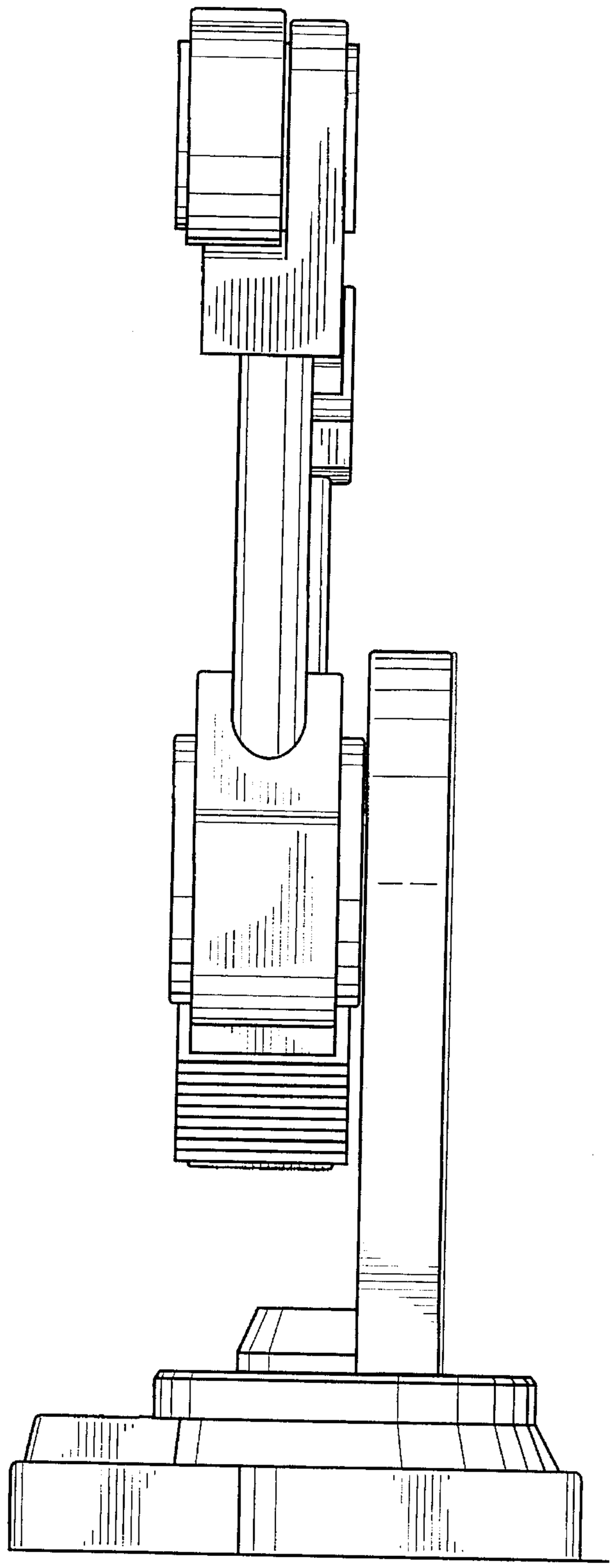

Fig. 4

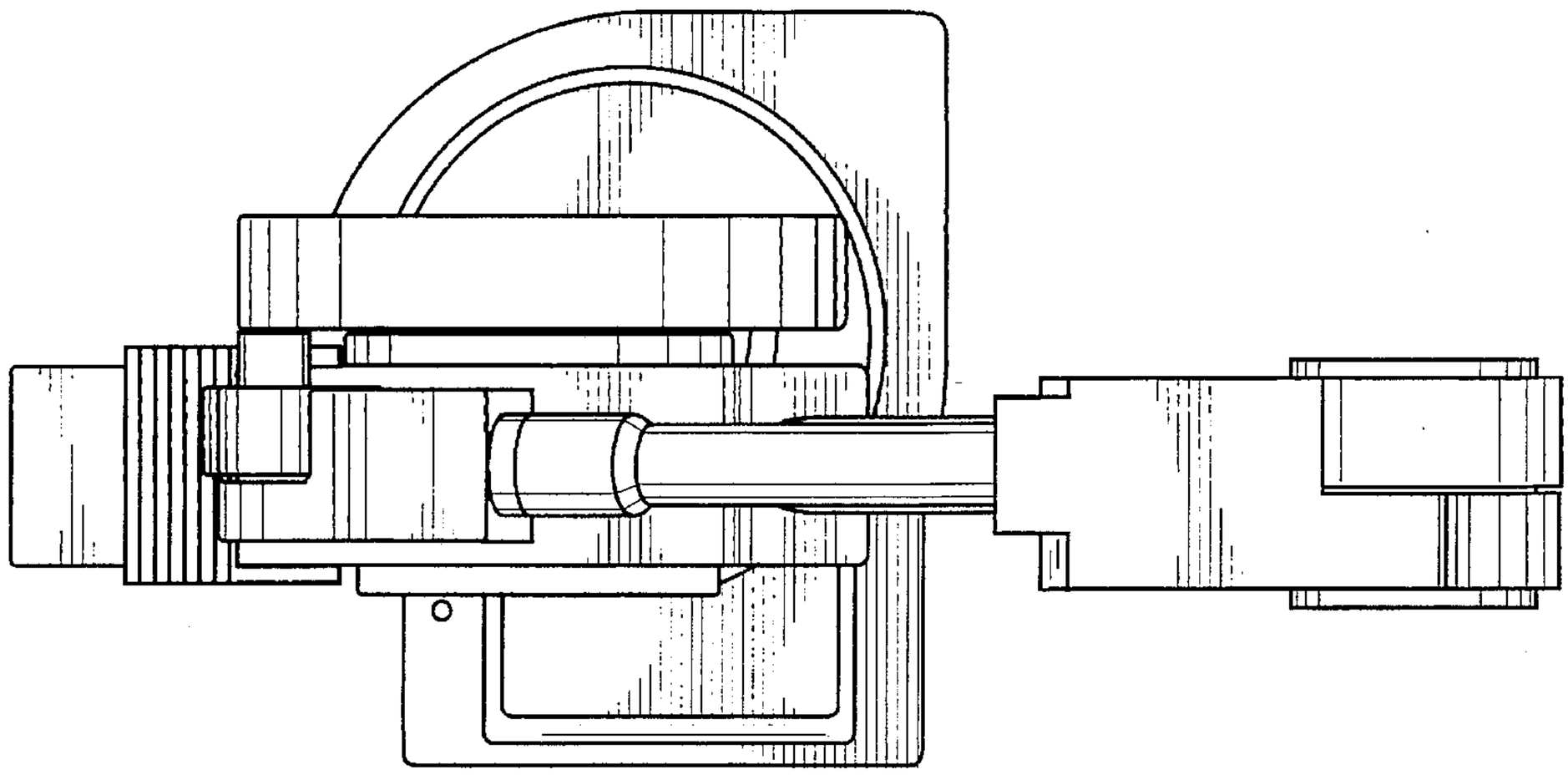

Fig. 5

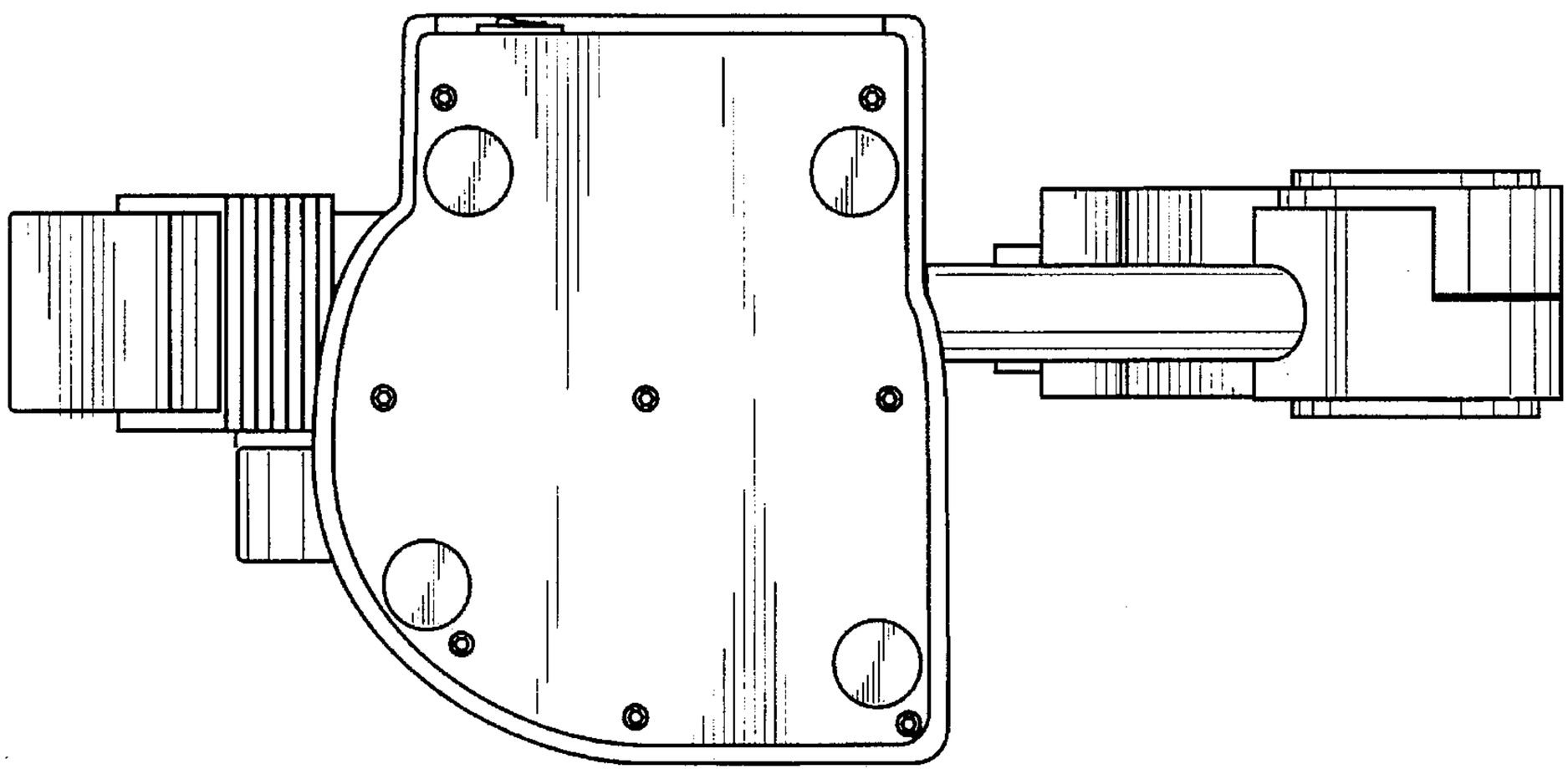

Fig. 6

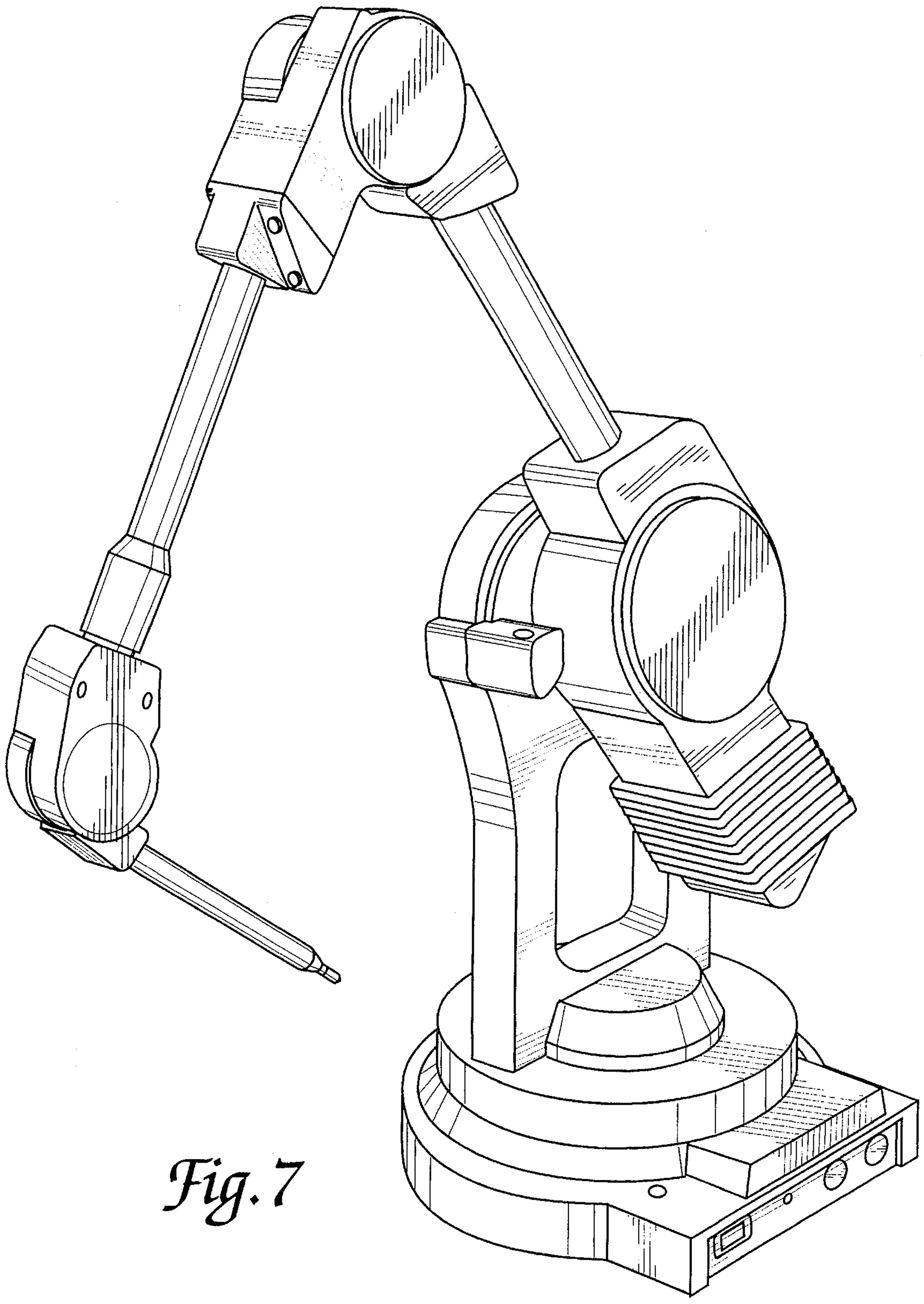

Fig. 7